THIS DOCUMENT HAS BEGUN DIGITALLY SIGNED AND SEALED BY:

Jay Morgan
2024.07.31 13:28:34 -04'00'

PRINTED COPIES OF THIS DOCUMENT ARE NOT CONSIDERED SIGNED AND SEALED. THE SIGNATURE MUST BE VERIFIED ON THE ELECTRONIC DOCUMENTS.

TENNESSEE DEPARTMENT OF TRANSPORTATION
7345 REGION LANE

KNOXVILLE, TENNESSEE 37914
JAMES B. MORGAN, P.E. NO. 111658

THE ABOVE NAMED PROFESSIONAL ENGINEER SHALL BE RESPONSIBLE FOR THE FOLLOWING SHEETS IN ACCORDANCE OF TENN. CODE ANN. §62-2-306.

SHEET NAME	SHEET NO.
SIGNATURE SHEETS	ROADWAY-SIGN1
TITLE SHEET	1
ROADWAY INDEX AND STANDARD ROADWAY DRAWINGS	1A
STANDARD ROADWAY DRAWINGS	1A1
STANDARD STRUCTURE AND TRAFFIC OPERATION DRAWINGS	1A2
PROJECT COMMITMENTS	1B
ESTIMATED ROADWAY QUANTITIES	2
ESTIMATED ROADWAY QUANTITIES FOOTNOTES	2-1
TYPICAL SECTIONS	2B, 2B1
TYPICAL SECTIONS AND PAVEMENT SCHEDULE	2B2
GENERAL NOTES	2C, 2C1
SPECIAL NOTES	2D
ENVIRONMENTAL NOTES	2E
TABULATED QUANTITIES	2F, 2F1
RIGHT-OF-WAY NOTES, UTILITY NOTES AND UTILITY OWNERS	3
RIGHT-OF-WAY ACQUISITION TABLE	3A
PROPERTY MAP	3B
PRESENT LAYOUT	4
RIGHT-OF-WAY DETAILS	4A
PROPOSED LAYOUT	4B
PROPOSED PROFILE	4C
SIDE ROAD AND HAUL ROAD PROFILES	5
PRIVATE DRIVE, BUSINESS, AND FIELD ENTRANCE PROFILES	6
DRAINAGE MAP	7
EROSION PREVENTION AND SEDIMENT CONTROL PLANS	8, 9, 10 – 12
SIGNING AND PAVEMENT MARKING PLAN	13
ROADWAY CROSS SECTIONS	17 – 23
SIDE ROAD CROSS SECTIONS	24 – 27
TRAFFIC CONTROL PLANS	T1 – T6

THIS DOCUMENT HAS BEEN DIGITALLY SIGNED AND SEALED BY:

Randy Plummer
Digitally signed by Randy Plummer
Date: 2024.07.31 13:36:38 -04'00'

PRINTED COPIES OF THIS DOCUMENT ARE NOT CONSIDERED SIGNED AND SEALED. THE SIGNATURE MUST BE VERIFIED ON THE ELECTRONIC DOCUMENTS.

TENNESSEE DEPARTMENT OF TRANSPORTATION
7345 REGION LANE

KNOXVILLE, TENNESSEE 37914
RANDY W. PLUMMER, P.E. NO. 112781

THE ABOVE NAMED PROFESSIONAL ENGINEER SHALL BE RESPONSIBLE FOR THE FOLLOWING SHEETS IN ACCORDANCE OF TENN. CODE ANN. §62-2-306.

SHEET NAME	SHEET NO.
SIGNATURE SHEET	ROADWAY-SIGN1
SIGN SCHEDULE SHEET	14 - 16

YEAR	PROJECT NO.	SHEET NO.
2024	BR-STP-107(28)	ROADWAY-SIGN1

STATE OF TENNESSEE
DEPARTMENT OF TRANSPORTATION

SIGNATURE SHEET

31-JUL-2024 09:57
\\tdot01nas002.tdot.state.tn.us\01Shared\SURVDES\Design\PROJECTS\Unicoi SR 107\00Roadway-Sign1.sht

THIS DOCUMENT HAS BEN DIGITALLY SIGNED AND SEALED BY:

Jay Morgan
2024.09.16 15:01:59 -04'00'

PRINTED COPIES OF THIS DOCUMENT ARE NOT CONSIDERED SIGNED AND SEALED. THE SIGNATURE MUST BE VERIFIED ON THE ELECTRONIC DOCUMENTS.

TENNESSEE DEPARTMENT OF TRANSPORTATION
7345 REGION LANE

KNOXVILLE, TENNESSEE 37914
JAMES B. MORGAN, P.E. NO. 111658

THE ABOVE NAMED PROFESSIONAL ENGINEER SHALL BE RESPONSIBLE FOR THE FOLLOWING SHEETS IN ACCORDANCE OF TENN. CODE ANN. §62-2-306.

SHEET NAME	SHEET NO.
SIGNATURE SHEETS	ROADWAY-SIGN2
ROADWAY INDEX AND STANDARD ROADWAY DRAWINGS	1A
ESTIMATED ROADWAY QUANTITIES FOOTNOTES	2-1
TRAFFIC CONTROL PLANS	T2 – T4

YEAR	PROJECT NO.	SHEET NO.
2024	BR-STP-107(28)	ROADWAY-SIGN2

STATE OF TENNESSEE
DEPARTMENT OF TRANSPORTATION

SIGNATURE SHEET

13-SEP-2024 14:04
\\tdot01nas002.tdot.state.tn.us\01Shared\SURVDES\Design\PROJECTS\Unicoi SR 107\00Roadway-Sign2.sht

THIS DOCUMENT HAS BEMN DIGITALLY SIGNED AND SEALED BY:

Jay Morgan
2025.01.10 09:04:58 -05'00'

PRINTED COPIES OF THIS DOCUMENT ARE NOT CONSIDERED SIGNED AND SEALED. THE SIGNATURE MUST BE VERIFIED ON THE ELECTRONIC DOCUMENTS.

TENNESSEE DEPARTMENT OF TRANSPORTATION
7345 REGION LANE

KNOXVILLE, TENNESSEE 37914
JAMES B. MORGAN, P.E. NO. 111658

THE ABOVE NAMED PROFESSIONAL ENGINEER SHALL BE RESPONSIBLE FOR THE FOLLOWING SHEETS IN ACCORDANCE OF TENN. CODE ANN. §62-2-306.

SHEET NAME	SHEET NO.
SIGNATURE SHEETS	ROADWAY-SIGN3
TITLE SHEET	1
ROADWAY INDEX AND STANDARD ROADWAY DRAWINGS	1A

YEAR	PROJECT NO.	SHEET NO.
2025	BR-STP-107(28)	ROADWAY-SIGN3

STATE OF TENNESSEE
DEPARTMENT OF TRANSPORTATION

SIGNATURE SHEET

09-JAN-2025 15:41
\\tdot01nas002.tdot.state.tn.us\01Shared\SURVDES\Design\PROJECTS\Unicoi SR 107\00Roadway-Sign3.sht

Index Of Sheets
SEE SHEET NO. 1A

STATE OF TENNESSEE
DEPARTMENT OF TRANSPORTATION
BUREAU OF ENGINEERING

DOES THIS PROJECT QUALIFY FOR UTILITY CHAPTER 86	YES X	NO
WORK ZONE SIGNIFICANCE DETERMINATION	SIGNIFICANT	
SIGNIFICANT	YES X	NO

TENN.	YEAR	SHEET NO.
	2025	1
FED. AID PROJ. NO.	BR-STP-107(28)	
STATE PROJ. NO.	86006-3235-94	

REV. 01/10/25: UPDATED YEAR. APPLIES TO ALL SHEETS.

UNICOI COUNTY

SR 107; (UNICOI DRIVE), BRIDGE OVER NORTH INDIAN CREEK, LM 5.22 IN ERWIN. (IA)

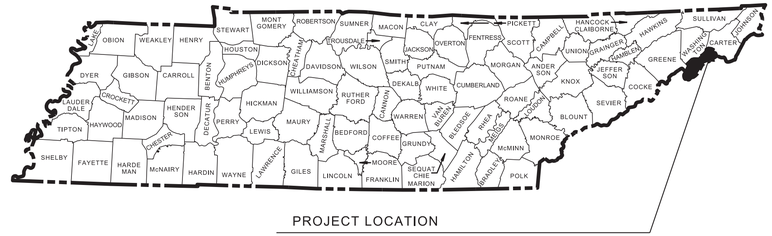

BRIDGE ID. # 86SR1070007

PS&E

BRIDGE, GRADE, DRAIN, BASE, PAVE, GUARDRAIL

STATE HIGHWAY NO. 107 F.A.H.S. NO. N/A

86006-3235-94
END PROJECT NO. BR-STP-107(28) CONSTRUCTION
STA. 216+50.00 S.R. 107
N 698164.0162 E 3045722.5472

86006-2235-94
END PROJECT NO. BR-STP-107(28) R.O.W.
STA. 213+73.97 S.R. 107
N 697889.6859 E 3045753.1061

86006-2235-94
BEGIN PROJECT NO. BR-STP-107(28) R.O.W.
STA. 208+00.00 S.R. 107
N 697318.6582 E 3045801.6275

86006-3235-94
BEGIN PROJECT NO. BR-STP-107(28) CONSTRUCTION
STA. 207+75.00 S.R. 107
N 697293.8548 E 3045798.5115

SCALE: 1"= 1000'

0 1000 2000 3000 FEET

N

NO EXCLUSIONS

S.R. 107 (UNICOI DR.) TO BE CLOSED DURING CONSTRUCTION

R.O.W. LENGTH	00.108 MILES
ROADWAY LENGTH	00.142 MILES
BRIDGE LENGTH	00.022 MILES
BOX BRIDGE LENGTH	00.000 MILES
BOX BRIDGE LENGTH	00.000 MILES ▲
PROJECT LENGTH	00.165 MILES

▲ Not included in the project length (Non Riding Surface).

SEALED BY
JAMES B. MORGAN
REGISTERED ENGINEER
No. 111658
AGRICULTURE
COMMERCE
STATE OF TENNESSEE
01/10/2025

APPROVED: _____
WILL REID, CHIEF ENGINEER

DATE: _____

APPROVED: _____
HOWARD H. ELEY, COMMISSIONER

SPECIAL NOTES

PROPOSALS MAY BE REJECTED BY THE COMMISSIONER IF ANY OF THE UNIT PRICES CONTAINED THEREIN ARE OBVIOUSLY UNBALANCED, EITHER EXCESSIVE OR BELOW THE REASONABLE COST ANALYSIS VALUE.

THIS PROJECT TO BE CONSTRUCTED UNDER THE STANDARD SPECIFICATIONS OF THE TENNESSEE DEPARTMENT OF TRANSPORTATION DATED JANUARY 1, 2021 AND ADDITIONAL SPECIFICATIONS AND SPECIAL PROVISIONS CONTAINED IN THE PLANS AND IN THE PROPOSAL CONTRACT.

TDOT PROJECT MANAGER: ERIC WILSON

DESIGNER : AUBIN CANNING CHECKED BY : JAY MORGAN

P.E. NO. 86006-1235-94 (DESIGN)

PIN NO. 124631.00

S.R. 107

SURVEY 03-22-18	TRAFFIC DATA	
ADD'L SURVEY 06-25-19	ADT (2024)	4140
	ADT (2044)	5130
	DHV (2044)	472
	D	55 - 45
	T (ADT)	4 %
	T (DHV)	3 %
	V	45 MPH

COORDINATES ARE NAD 83(1995), ARE DATUM ADJUSTED BY THE FACTOR OF 1.00012 AND TIED TO THE TGRN. ALL ELEVATIONS ARE REFERENCED TO THE NAVD 1988 WITH GEOID 12B.

U.S. DEPARTMENT OF TRANSPORTATION
FEDERAL HIGHWAY ADMINISTRATION

APPROVED: _____

DIVISION ADMINISTRATOR _____ DATE

09-JAN-2025 15:43
\\tdot01nas002.tdot.state.in.us\01Shared\SURVDES\Design\PROJECTS\Unicoi SR 107\001.sht

ROADWAY INDEX

SHEET NAME	SHEET NO.
SIGNATURE SHEETS	ROADWAY-SIGN1-3
TITLE SHEET	1
ROADWAY INDEX AND STANDARD ROADWAY DRAWINGS	1A
STANDARD ROADWAY DRAWINGS	1A1
STANDARD STRUCTURE AND TRAFFIC OPERATION DRAWINGS	1A2
PROJECT COMMITMENTS	1B
ESTIMATED ROADWAY QUANTITIES	2
ESTIMATED ROADWAY QUANTITIES FOOTNOTES	2-1
TYPICAL SECTIONS	2B, 2B1
TYPICAL SECTIONS AND PAVEMENT SCHEDULE	2B2
GENERAL NOTES	2C, 2C1
SPECIAL NOTES	2D
ENVIRONMENTAL NOTES	2E
TABULATED QUANTITIES	2F, 2F1
RIGHT-OF-WAY NOTES, UTILITY NOTES AND UTILITY OWNERS	3
RIGHT-OF-WAY ACQUISITION TABLE	3A
PROPERTY MAP	3B
PRESENT LAYOUT	4
RIGHT-OF-WAY DETAILS	4A
PROPOSED LAYOUT	4B
PROPOSED PROFILE	4C
SIDE ROAD AND HAUL ROAD PROFILES	5
PRIVATE DRIVE, BUSINESS, AND FIELD ENTRANCE PROFILES	6
DRAINAGE MAP	7
EROSION PREVENTION AND SEDIMENT CONTROL PLANS	8, 9, 10 - 12
SIGNING AND PAVEMENT MARKING PLAN	13
SIGN SCHEDULE SHEET	14 - 16
ROADWAY CROSS SECTIONS	17 – 23
SIDE ROAD CROSS SECTIONS	24 – 27
TRAFFIC CONTROL PLANS	T1 – T6
BRIDGE PLANS	B-1
GEOTECHNICAL PLANS	G-1
STORM WATER POLLUTION PREVENTION PLAN (SWPPP) PLANS	S-1
UTILITIES PLANS	U1–1

NOTE: THE ALPHABETICAL LETTERS “I”, “O” & “Q” ARE NOT USED IN NUMBERING OF SHEETS.

STANDARD ROADWAY DRAWINGS

STANDARD ROADWAY TITLE SHEET, ABBREVIATIONS AND LEGENDS

DWG.	REV.	DESCRIPTION
RD-TP-1	09-26-16	STANDARD ROADWAY DRAWINGS TITLE SHEET
RD-A-1	02-20-20	STANDARD ABBREVIATIONS A THROUGH L
RD-A-2		STANDARD ABBREVIATIONS M THROUGH Z
RD-L-1	02-20-20	STANDARD LEGEND
RD-L-1A		STANDARD LEGEND
RD-L-2	02-20-20	STANDARD LEGEND FOR UTILITY INSTALLATIONS
RD-L-3	03-01-23	STANDARD LEGEND FOR SIGNALIZATION AND LIGHTING
RD-L-4	02-20-20	STANDARD LEGEND FOR SIGNALIZATION AND LIGHTING
RD-L-5	02-20-20	STANDARD LEGEND FOR EROSION PREVENTION AND SEDIMENT CONTROL
RD-L-6	02-20-20	STANDARD LEGEND FOR EROSION PREVENTION AND SEDIMENT CONTROL
RD-L-7	02-20-20	STANDARD LEGEND FOR EROSION PREVENTION AND SEDIMENT CONTROL

ROADWAY DESIGN STANDARDS

DWG.	REV.	DESCRIPTION
RD11-SE-1		TRANSITION AND CROSS SLOPE DETAILS
RD11-SE-2		SUPERELEVATION TRANSITION DETAILS FOR UNDIVIDED ROADWAYS
RD11-SE-2A		SUPERELEVATION TRANSITION SECTIONS FOR UNDIVIDED ROADWAYS
RD11-TS-2		DESIGN STANDARDS FOR COLLECTORS, 2-LANE ROADS AND STREETS
RD11-TS-3		DESIGN STANDARD FOR ARTERIAL HIGHWAYS (2-LANE)
RD11-TS-6B		TYPICAL CURB AND GUTTER SECTIONS WITH SHOULDERS AND WITHOUT GRASS STRIPS
RD11-LR-1		MINIMUM RUNOFF LENGTHS (LR) FOR URBAN HIGHWAYS
RD11-LR-2		MINIMUM RUNOFF LENGTHS (LR) FOR RURAL HIGHWAYS
RD11-S-11		DESIGN AND CONSTRUCTION DETAILS FOR ROADSIDE SLOPE DEVELOPMENT
RD11-S-11A		ROADSIDE DITCH DETAILS FOR DESIGN AND CONSTRUCTION
RD11-SD-1		INTERSECTION SIGHT DISTANCE DESIGN AND GENERAL NOTES
RD11-SD-2		INTERSECTION SIGHT DISTANCE LANDSCAPE AND OBSTRUCTION
RD11-SD-3		INTERSECTION SIGHT DISTANCE 2-LANE ROADWAYS

PIPE CULVERTS AND ENDWALLS

DWG.	REV.	DESCRIPTION
D-PB-1	03-01-23	STANDARD DETAILS FOR CONCRETE PIPE INSTALLATION
D-PE-4	06-28-19	STRAIGHT CONCRETE ENDWALLS (PIPE SIZES 18" TO 30")

CATCH BASINS AND MANHOLES

DWG.	REV.	DESCRIPTION
D-CB-12P	02-20-20	STANDARD PRECAST RECTANGULAR CONCRETE NO.12 CATCH BASIN
D-CB-12SB	02-20-20	STANDARD 4’ X 4’ SQUARE CONCRETE NO. 12 CATCH BASIN
D-CB-14P	02-20-20	STANDARD PRECAST RECTANGULAR CONCRETE NO. 14 CATCH BASIN
D-CB-14RB	02-20-20	STANDARD PRECAST CIRCULAR NO. 14RB CATCH BASIN
D-CB-25SB	02-20-20	STANDARD 4' X 4' SQUARE CONCRETE NO. 25 CATCH BASIN (FOR USE WITH 6" SLOPING CURB)
D-CB-42S	02-20-20	STANDARD 32" X 32" SQUARE CONCRETE NO. 42 CATCH BASIN
D-CB-99	02-20-20	MISCELLANEOUS DETAILS FOR RECTANGULAR STRUCTURES
D-CB-99R	01-28-22	MISCELLANEOUS DETAILS FOR ROUND STRUCTURES
D-CB-99RA	10-29-21	BILL OF STEEL FOR ROUND CATCH BASIN LIDS
D-CBB-12A	06-28-19	TYPE ‘B’ CAST IRON FRAME, GRATE & VERTICAL INLET DETAILS FOR NOS. 10, 12, 14, 16 & 17 TYPE CATCH BASINS
D-CBB-12B	06-28-19	TYPE ‘B’ CAST IRON FRAME, GRATE & 6" SLOPING INLET DETAILS FOR NOS. 25, 26 & 27 TYPE CATCH BASINS
D-CBB-12D	07-07-23	TYPE "B" CAST IRON FRAME, GRATE & CURB HOOD DETAILS FOR NOS, 12, 14, 16 & 17 TYPE CATCH BASINS
D-CBB-42	10-29-21	CAST IRON GRATE DETAILS FOR NOS. 42, 43 & 44 TYPE CATCH BASINS
D-MH-2	02-20-20	STANDARD MASONRY & PRECAST NO. 3 MANHOLE
D-MH-3	02-20-20	TYPICAL DESIGN OF LIDS FOR NO. 3 MANHOLE
D-MH-4	02-20-20	STANDARD NO. 3 MANHOLE CASTINGS AND STEPS
D-RF-1	05-04-22	STANDARD PRECAST RISER

ROADWAY, PAVEMENT APPURTENANCES, AND FENCES

DWG.	REV.	DESCRIPTION
RP-D-15	06-15-21	DETAILS OF STANDARD CONCRETE DRIVEWAYS
RP-D-16	10-29-21	DETAILS OF LOWERED STANDARD CONCRETE DRIVEWAYS
RP-I-5	05-01-20	EXAMPLES OF STREET & ALLEY INTERSECTIONS
RP-R-1	10-16-20	STANDARD RAMP DETAILS FOR ROADWAYS AND DRIVEWAYS
RP-SC-1	05-04-22	SLOPING CONCRETE CURB AND CURB AND GUTTER
RP-VC-10	03-04-21	VERTICAL CONCRETE CURB AND CURB AND GUTTER (FOR 8” TO 12” GUTTER DEPTH)
RP-VC-11	03-04-21	VERTICAL CONCRETE CURB AND CURB AND GUTTER (FOR 6” & 7” GUTTER DEPTH)
S-RP-2	06-28-19	STANDARD CONCRETE RIGHT-OF-WAY MARKERS

TYPE	YEAR	PROJECT NO.	SHEET NO.
PS&E	2024	BR-STP-107(28)	1A

REV. 09/16/24: ADDED ROADWAY-SIGN2 TO ROADWAY INDEX.

REV. 01/10/25: ADDED ROADWAY-SIGN3 TO ROADWAY INDEX.

SEALED BY

01/10/2025

STATE OF TENNESSEE
DEPARTMENT OF TRANSPORTATION

ROADWAY INDEX AND STANDARD ROADWAY DRAWINGS

09-JAN-2025 15:40
\\tdot01nas002.tdot.state.tn.us\01Shared\SURVDES\Design\PROJECTS\Unicoi SR 107\001A.sht

TYPE	YEAR	PROJECT NO.	SHEET NO.
PS&E	2024	BR-STP-107(28)	1A1

STANDARD ROADWAY DRAWINGS, CONT'D

DWG.	REV.	DESCRIPTION
SAFETY DESIGN AND GUARDRAILS		
S-CZ-1	06-28-19	CLEAR ZONE CRITERIA
S-PL-1	03-01-23	SAFETY PLAN FOR BARRIER LENGTH OF NEED
S-PL-1B	03-01-23	SAFETY PLAN FOR BARRIER LENGTH OF NEED ON CURVED ROADWAYS
S-PL-3	03-01-23	SAFETY PLAN MINIMUM INSTALLATION AT BRIDGE ENDS
S-PL-6	06-15-21	SAFETY PLAN SAFETY HARDWARE PLACEMENT ON OUTSIDE EDGE
S-GR31-1	06-15-21	GUARDRAIL DETAILS
S-GR31-1A	06-28-19	GUARDRAIL AND BLOCK-OUT DETAILS
S-GR31-1B		GUARDRAIL FASTENING HARDWARE
S-GR31-1C	07-07-23	GUARDRAIL GENERAL NOTES AND POST DETAILS
S-GRC-4	07-07-23	GUARDRAIL CONNECTION TO BRIDGE RAILING CONCRETE PARAPET
S-GRT-2	06-28-19	TYPE 38 GUARDRAIL END TERMINAL
S-GRT-2P	10-16-20	EARTH PAD FOR TYPE 38 AND TYPE 21 TERMINAL
S-GRA-3	01-09-24	TYPE 13 GUARDRAIL ANCHOR
S-GRA-4	03-01-23	IN-LINE GUARDRAIL ANCHOR TO PRIVATE DRIVE
DESIGN - TRAFFIC CONTROL		
T-M-1	06-28-19	DETAILS OF PAVEMENT MARKINGS FOR CONVENTIONAL ROADS AND MARKING ABBREVIATIONS
T-M-2	01-09-24	DETAILS OF PAVEMENT MARKINGS FOR CONVENTIONAL ROADS
T-M-4	07-17-20	STANDARD INTERSECTION PAVEMENT MARKINGS
T-M-18	10-29-21	FLEXIBLE DELINEATOR DETAILS
T-M-18A		DELINEATOR MOUNTING DETAILS
T-WZ-10	04-02-12	ADVANCE ROAD WORK SIGNING ON HIGHWAYS AND FREEWAYS
T-WZ-32	11-30-20	TRAFFIC CONTROL PLAN SIGNAL LAYOUT FOR TRAFFIC SIGNAL AT TWO LANE BRIDGE RECONSTRUCTION SITE
T-WZ-33	05-27-98	TRAFFIC CONTROL PLAN FOR CLOSE INTERSECTION CONDITIONS USING TRAFFIC SIGNAL AT TWO LANE BRIDGE RECONSTRUCTION SITE
T-WZ-34	09-01-05	TRAFFIC CONTROL PLAN GENERAL NOTES FOR TRAFFIC SIGNAL AT TWO LANE BRIDGE RECONSTRUCTION SITE
T-WZ-35	04-02-12	TRAFFIC CONTROL PLAN PAY ITEM AND SIGN DETAILS FOR TRAFFIC SIGNAL AT TWO LANE BRIDGE RECONSTRUCTION SITE
T-WZ-PBR2	02-28-20	DETAILS FOR WORK ZONE CHANNELIZATION DEVICES
T-WZ-PCB2A	12-09-22	20 FOOT PORTABLE CONCRETE BARRIER RAIL STIFFENER TUBE
EROSION PREVENTION AND SEDIMENT CONTROL		
EC-STR-2	08-01-12	SEDIMENT FILTER BAG
EC-STR-3B	06-15-21	SILT FENCE
EC-STR-3C	03-01-23	SILT FENCE WITH WIRE BACKING
EC-STR-3E	04-01-08	SILT FENCE FABRIC JOINING DETAILS
EC-STR-34	05-04-22	EROSION CONTROL BLANKET FOR SLOPE INSTALLATION
EC-STR-37	06-10-14	SEDIMENT TUBE
EC-STR-6	11-30-20	ROCK CHECK DAM
EC-STR-6A	05-06-16	ENHANCED ROCK CHECK DAM
EC-STR-19	04-01-08	CATCH BASIN PROTECTION
EC-STR-39A	08-01-12	CURB INLET PROTECTION TYPE 3 & 4
EC-STR-25	08-01-12	TEMPORARY CULVERT CROSSING, CONSTRUCTION EXIT, CONSTRUCTION FORD
EC-STR-31	05-04-22	TEMPORARY DIVERSION CHANNEL
EC-STR-31A	04-01-08	TEMPORARY DIVERSION CHANNEL DESIGN

SEALED BY

07/31/2024

STATE OF TENNESSEE
DEPARTMENT OF TRANSPORTATION

STANDARD ROADWAY DRAWINGS

31-JUL-2024 09:59
\\tdot01nas002.tdot.state.tn.us\01Shared\SURVDES\Design\PROJECTS\Unicoi SR 107\001A1.sht

TYPE	YEAR	PROJECT NO.	SHEET NO.
PS&E	2024	BR-STP-107(28)	1A2

STANDARD TRAFFIC OPERATIONS DRAWINGS

DWG.	REV.	DESCRIPTION
SIGNS		
T-S-7	02-12-91	HIGHWAY SHIELDS USED ON INTERSTATE AND U.S. NUMBERED ROUTES
T-S-8	07-15-91	HIGHWAY SHIELDS USED ON STATE NUMBERED ROUTES AND ARROWS
T-S-9	06-10-14	STANDARD LAYOUT GROUND MOUNTED SIGNS
T-S-10	04-04-12	STANDARD MOUNTING DETAILS FLAT SHEET SIGNS ALUMINUM-STEEL DESIGN
T-S-12	07-10-17	STANDARD STEEL GROUND MOUNTED SIGNS, BREAK-AWAY TYPE POST FOOTING DETAILS, SQUARE TUBES
T-S-17	07-11-17	STANDARD GROUND MOUNTED SIGN USING PERFORATED/KNOCKOUT SQUARE TUBE
T-S-19	06-12-20	STANDARD STEEL SIGN SUPPORTS
T-S-20	07-11-17	SIGN DETAILS
T-S-23A	07-11-17	MULTI-DIRECTIONAL SLIP BASE BREAKAWAY P-POST SIGN SUPPORT
SIGNALS		
T-SG-7A		TYPICAL SIGNAL HEAD PLACEMENT APPROACHES WITH NO THROUGH MOVEMENTS
T-SG-7C		TYPICAL SIGNAL HEAD PLACEMENT ONE-LANE AND TWO-LANE APPROACHES

STANDARD STRUCTURE DRAWINGS

DWG.	REV.	DESCRIPTION
NEW STRUCTURES		
STD-1-5	06-05-23	REINFORCED CONCRETE PAVEMENT AT BRIDGE ENDS
STD-2-1	11-01-10	BRIDGE MOUNTED INTERCONNECTED PORTABLE BARRIER RAIL
STD-2-3		BRIDGE MOUNTED INTERCONNECTED PORTABLE BARRIER RAIL ALTERNATE CONNECTION DETAIL
STD-5-1		STANDARD PILE DETAILS
STD-8-6	10-03-18	TRI-STAR STATE EMBLEM FINISH DETAILS
STD-9-1	10-07-08	STANDARD REINFORCING BAR SUPPORT DETAILS FOR CONCRETE SLABS
STD-10-1	06-05-23	MISCELLANEOUS ABUTMENT AND DRAINAGE DETAILS
STD-10-2	06-05-23	MISC. ABUTMENT & PAVEMENT AT BRIDGE ENDS BACKFILL DETAILS
STD-11-1	04-15-20	BRIDGE RAILING CONCRETE PARAPET WITH STRUCTURAL TUBING
STD-14-3	03-06-24	STANDARD DETAILS FOR PRESTRESSED BOX BEAMS

SEALED BY

07/31/2024

STATE OF TENNESSEE
DEPARTMENT OF TRANSPORTATION

STANDARD STRUCTURE AND TRAFFIC OPERATION DRAWINGS

31-JUL-2024 10:00
\\tdot01nas002.tdot.state.tn.us\01Shared\SURVDES\Design\PROJECTS\Unicoi SR 107\001A2.sht

TYPE	YEAR	PROJECT NO.	SHEET NO.
R.O.W.	2020	BR-STP-107(28)	1B
PS&E	2024	BR-STP-107(38)	1B

PROJECT COMMITMENTS

COMMITMENT ID	SOURCE DIVISON	DESCRIPTION	STA. / LOCATION
EDHZ002	ENVIRONMENTAL DIVISION, HAZARDOUS MATERIALS	An Asbestos Containing Material (ACM) survey was completed on Bridge No. 86SR1070007, SR-107 over Indian Creek LM 5.22 (86-SR107-05.22). The bridge has asbestos in approximately 56 linear feet of cementitious deck drains at 15% chrysotile. Please see the report for further details and photographs.	BRIDGE NO. 86SR1070007
EDHZ003	ENVIRONMENTAL DIVISION, HAZARDOUS MATERIALS	The State of Tennessee asbestos accreditation requirements (TDEC Rules Chapter 1200-01-20) mandates that ACM abatement work be performed by an accredited firm (contractor) using accredited abatement workers and supervisors. Abatement of this material should be accomplished per SP202ACM Special Provision Regarding Removal of Asbestos-Containing Materials. ACM abatement should be completed prior to any demolition activities if possible. Prior to the demolition or rehabilitation of any structure (bridge or building), the contractor is required to submit the National Emission Standards for Hazardous Air Pollutants standard 10-day notice of demolition to the TDEC Division of Air Pollution Control (per TDOT Standard Specifications for Road and Bridge Construction (January 1, 2015) Sections 107.08 D and 202.03).	BRIDGE NO. 86SR1070007

SEALED BY

07/31/2024

STATE OF TENNESSEE
DEPARTMENT OF TRANSPORTATION

PROJECT COMMITMENTS

31-JUL-2024 10:00
\\tdot01nas002.tdot.state.tn.us\01Shared\SURVDES\Design\PROJECTS\Unicoi SR 107\001B.sht

TYPE	YEAR	PROJECT NO.	SHEET NO.
PS&E	2024	BR-STP-107(28)	2

ESTIMATED ROADWAY QUANTITIES

	ITEM NO.	DESCRIPTION	UNIT	QUANTITY 86006-3235-94
	105-01	CONSTRUCTION STAKES, LINES AND GRADES	LS	1
	201-01	CLEARING AND GRUBBING	LS	1
(1)	202-01.50	REMOVAL OF STRUCTURES AND OBSTRUCTIONS	EACH	3
	202-02.01	REMOVAL OF PIPE (12" ,STA. 216+08.31)	L.F.	41
	202-02.02	REMOVAL OF PIPE (18" ,STA. 215+11.35)	L.F.	104
	202-02.03	REMOVAL OF PIPE (18" ,STA. 214+26.31)	L.F.	60
	202-02.04	REMOVAL OF PIPE (12" ,STA. 212+91.74)	L.F.	203
	202-02.05	REMOVAL OF PIPE (15" ,STA. 212+67.83)	L.F.	140
(21)	202-02.06	REMOVAL OF PIPE (15",STA. 211+96.85)	L.F.	14
	202-03.01	REMOVAL OF ASPHALT PAVEMENT	S.Y.	1314
(3)(19)	203-01	ROAD & DRAINAGE EXCAVATION (UNCLASSIFIED)	C.Y.	1910
(17)(19)	203-02.01	BORROW EXCAVATION (GRADED SOLID ROCK)	TON	523
(19)	203-04	PLACING AND SPREADING TOPSOIL	C.Y.	105
	203-06	WATER	M.G.	22
	203-07	FURNISHING & SPREADING TOPSOIL	C.Y.	46
(22)	203-50	CONSTRUCTION OF HAUL ROAD	LS	1
(20)	204-08.01	BACKFILL MATERIAL (FLOWABLE FILL)	C.Y.	2
	209-05	SEDIMENT REMOVAL	C.Y.	67
(6)(24)	209-08.02	TEMPORARY SILT FENCE (WITH BACKING)	L.F.	582
(6)	209-08.03	TEMPORARY SILT FENCE (WITHOUT BACKING)	L.F.	514
(6)	209-08.07	ROCK CHECK DAM	EACH	4
(6)	209-08.08	ENHANCED ROCK CHECK DAM	EACH	6
(6)	209-09.03	SEDIMENT FILTER BAG (15' X 15')	EACH	1
(6)	209-09.43	CURB INLET PROTECTION (TYPE 4)	EACH	13
(6)	209-40.30	CATCH BASIN PROTECTION (TYPE A)	EACH	4
(6)	209-40.33	CATCH BASIN PROTECTION (TYPE D)	EACH	1
(6)	209-65.03	TEMPORARY DIVERSION CHANNEL	L.F.	122
(5)	303-01	MINERAL AGGREGATE, TYPE A BASE, GRADING D	TON	2807
(2)	303-01.01	GRANULAR BACKFILL (ROADWAY)	TON	15
(6)(25)	303-10.01	MINERAL AGGREGATE (SIZE 57)	TON	22
(29)	303-10.04	MINERAL AGGREGATE (SIZE)	TON	532
	307-01.01	ASPHALT CONCRETE MIX (PG64-22) (BPMB-HM) GRADING A	TON	512
(13)	307-01.08	ASPHALT CONCRETE MIX (PG64-22) (BPMB-HM) GRADING B-M2	TON	452
	402-01	BITUMINOUS MATERIAL FOR PRIME COAT (PC)	TON	5
	403-01	BITUMINOUS MATERIAL FOR TACK COAT (TC)	TON	2.5
(28)	411-01.07	ACS MIX (PG64-22) GRADING E SHOULDER	TON	24
	411-01.10	ACS MIX(PG64-22) GRADING D	TON	278
	415-01.01	COLD PLANING BITUMINOUS PAVEMENT	TON	41
(11)	607-03.02	18" CONCRETE PIPE CULVERT (CLASS III)	L.F.	541
(11)	607-05.02	24" CONCRETE PIPE CULVERT (CLASS III)	L.F.	54
(11)	607-06.02	30" CONCRETE PIPE CULVERT (CLASS III)	L.F.	78
	611-01.02	MANHOLES, > 4' - 8' DEPTH	EACH	1
	611-07.01	CLASS A CONCRETE (PIPE ENDWALLS)	C.Y.	2
	611-07.02	STEEL BAR REINFORCEMENT (PIPE ENDWALLS)	LB.	93
	611-12.01	CATCH BASINS, TYPE 12, 0' - 4' DEPTH	EACH	3
	611-12.02	CATCH BASINS, TYPE 12, > 4' - 8' DEPTH	EACH	3
	611-14.02	CATCH BASINS, TYPE 14, > 4' - 8' DEPTH	EACH	5
	611-25.01	CATCH BASINS, TYPE 25, 0' - 4' DEPTH	EACH	1
	611-25.02	CATCH BASINS, TYPE 25, > 4' - 8' DEPTH	EACH	1
	611-42.01	CATCH BASINS, TYPE 42, 0' - 4' DEPTH	EACH	1
	701-03	CONCRETE MEDIAN PAVEMENT	C.Y.	27
	702-01	CONCRETE CURB	C.Y.	14
	702-03	CONCRETE COMBINED CURB & GUTTER	C.Y.	46
(27)	705-06.01	W BEAM GR (TYPE 2) MASH TL3	L.F.	113
	705-06.11	GR TERMINAL (IN-INLINE) MASH TL3	EACH	1
(27)	705-06.20	TANGENT ENERGY ABSORBING TERM MASH TL-3	EACH	3
(27)	705-06.25	THRIE BEAM BRIDGE TRANSITION MASH TL-3	EACH	4
	706-01	GUARDRAIL REMOVED	L.F.	142
	706-06.03	RADIUS RAIL	L.F.	38
	706-10.26	ROUNDED END ELEMENT	EACH	1
	708-02.01	MARKERS (CONCRETE R.O.W. POSTS)	EACH	10

ESTIMATED ROADWAY QUANTITIES

	ITEM NO.	DESCRIPTION	UNIT	QUANTITY 86006-3235-94
(12)	709-05.05	MACHINED RIP-RAP (CLASS A-3)	TON	50
(2)	709-05.08	MACHINED RIP-RAP (CLASS B)	TON	28
(18)	709-05.09	MACHINED RIP-RAP (CLASS C)	TON	1335
	712-01	TRAFFIC CONTROL	LS	1
	712-02.12	PORTABLE BARRIER RAIL, REDUCED DEFLECTION (MASH TL-3)	L.F.	465
(7)	712-02.60	TEMPORARY WORK ZONE CRASH CUSHION (MASH TL-3)	EACH	6
(8)	712-04.01	FLEXIBLE DRUMS (CHANNELIZING)	EACH	100
	712-04.50	BARRIER RAIL DELINEATOR	EACH	10
(8)	712-05.01	WARNING LIGHTS (TYPE A)	EACH	50
(8)	712-06	SIGNS (CONSTRUCTION)	S.F.	1486
(8)	712-07.03	TEMPORARY BARRICADES (TYPE III)	L.F.	77
(8)	712-09.02	REMOVABLE PAVEMENT MARKING (8" BARRIER LINE)	L.F.	1406
(8)	712-09.04	REMOVABLE PAVEMENT MARKING (STOP LINE)	L.F.	48
(8)	712-09.08	REMOVABLE PAVEMENT MARKING (6" line)	L.F.	840
(8)	712-09.30	REMOVABLE BLACK-OUT TAPE (6")	L.F.	1500
	713-01.01	CLASS A CONCRETE (FOUNDATION FOR SIGN SUPPORTS)	C.Y.	2
	713-01.02	STEEL BAR REINFORCEMENT(FOUNDATION FOR SIGN SUPPORTS)	LB.	225
	713-02.21	SIGN POST DELINEATION ENHANCEMENT	L.F.	6
	713-11.02	PERFORATED/KNOCKOUT SQUARE TUBE POST	LB.	1257
	713-11.05	SQUARE TUBE SIGN SUPPORT	LB.	233
	713-11.21	P POST SLIP BASE	EACH	9
	713-13.02	FLAT SHEET ALUMINUM SIGNS (0.080" THICK)	S.F.	140
	713-13.03	FLAT SHEET ALUMINUM SIGNS (0.100" THICK)	S.F.	45
	713-15	REMOVAL OF SIGNS, POSTS AND FOOTINGS	LS	1
	713-16.01	CHANGEABLE MESSAGE SIGN UNIT	EACH	2
(9)	716-02.05	PLASTIC PAVEMENT MARKING (STOP LINE)	L.F.	31
(10)	716-05.20	PAINTED PAVEMENT MARKING (6" LINE)	L.M.	0.8
	716-12.02	ENHANCED FLATLINE THERMO PVMT MRKNG (6IN LINE)	L.M.	0.8
	717-01	MOBILIZATION	LS	1
(14)	730-40.02	TEMPORARY TRAFFIC SIGNAL SYSTEM	LS	1
(30)	740-07.04	GEOGRID REINFORCEMENT TYPE 2	S.Y.	800
(23)	740-10.03	GEOTEXTILE (TYPE III)(EROSION CONTROL)	S.Y.	875
(17)	740-10.04	GEOTEXTILE (TYPE IV)(STABILIZATION)	S.Y.	1105
(6)	740-11.02	TEMPORARY SEDIMENT TUBE 12IN	L.F.	425
	801-01.07	TEMPORARY SEEDING (WITH MULCH)	UNIT	8
(26)	801-01.38	NATVE SEED MX FINAL STABLIZATN OF SLOPES	UNIT	8
	801-02	SEEDING (WITHOUT MULCH)	UNIT	4
(4)	801-03	WATER (SEEDING & SODDING)	M.G.	5
(15)	803-01	SODDING (NEW SOD)	S.Y.	472
(6)	805-12.02	EROSION CONTROL BLANKET (TYPE II)	S.Y.	451
(16)	806-02.03	PROJECT MOWING	CYCL	6

SEALED BY

07/31/2024

STATE OF TENNESSEE
DEPARTMENT OF TRANSPORTATION

ESTIMATED ROADWAY QUANTITIES

31-JUL-2024 10:01
\\tdot01nas002.tdot.state.in.us\01Shared\SURVDES\Design\PROJECTS\Unicol SR 107\002.SHT

FOOTNOTES

(1) INCLUDES CATCH BASINS LOCATED AT STA. 214+57.61, STA. 213+95.07, & STA. 213+38.58.

(2) FOR USE WITH SPECIAL DITCHES.

(3) INCLUDES 7 C.Y. FOR TEMPORARY CONSTRUCTION EXIT.

(4) INCLUDES 0.5 THOUSAND GALLONS FOR EROSION PREVENTION AND SEDIMENT CONTROL.

(5) INCLUDES 200 TONS FOR RESIDENTAL/BUSINESS ENTRANCE TRAFFIC CONTROL, 329 TONS TO REPLACE EXISTING QUANTITY FOR PROPOSED GRADE BUILD-UP, AND 40 TONS FOR PATCHING AROUND PROPOSED DRAINAGE STRUCTURES #4 AND #7 AND BEHIND PROPOSED RAISED ISLAND CURB FROM STA. 213+11.31 TO STA. 301+60.00.

(6) SEE SUBSECTION 209.07 OF THE STANDARD SPECIFICATIONS FOR MAINTENACE AND REPLACEMENT. ALL QUANTITIES ARE TO BE USED AS DIRECTED BY THE T.D.O.T. MANAGER.

(7) THIS ITEM SHALL BE A PORTABLE ENERGY ABSORBING TERMINAL MEETING THE REQUIREMENTS OF AASHTO MASH FOR TEST LEVEL 3. THE PAY ITEM WILL INCLUDE FURNISHING AND INSTALLING ALL COMPONENTS AS SHOWN ON THE MANUFACTURER'S DRAWING.

(8) QUANTITIES MAY BE INCREASED OR DECREASED BY THE T.D.O.T. MANAGER.

(9) THE CONTRACTOR MAY ELECT TO SUBSTITUTE PREFORMED PLASTIC FOR THERMOPLASTIC. PREFORMED PLASTIC SHALL BE PAID FOR AT THE SAME UNIT PRICE BID FOR THERMOPLASTIC.

(10) TO BE USED FOR TEMPORARY PAVEMENT MARKINGS ON INTERMEDIATE LAYERS.

(11) THE BEDDING MATERIAL SHALL BE INCLUDED IN THE COST OF THE PROPOSED PIPE CULVERT.

(12) FOR USE WITH TEMPORARY CONSTRUCTION ENTRANCE/EXIT.

(13) INCLUDES 60 TONS FOR CONSTRUCTION TIE-INS.

(14) INCLUDES THE TEMPORARY TRAFFIC SIGNAL SYSTEM FOR ALL SIDE ROADS AND TEMPORARY TRAFFIC SIGNAL SYSTEM FOR 6 DRIVEWAYS AS SHOWN ON PHASES 1 AND 2 OF THE TRAFFIC CONTROL PLANS.

(15) INCLUDES 18 S.Y. FOR SPECIAL DITCH AND 85 S.Y. FOR SCARIFIED AREA.

(16) ITEM INCLUDES LITTER & TRASH REMOVAL. THIS WORK WILL NOT BE MEASURED & PAID FOR DIRECTLY BUT WILL BE INCLUDED IN THE COST OF ITEM NO. 806-02.03, PROJECT MOWING, PER CYCLE.

(17) INCLUDES 407 SY TO BE USED FOR GRADED SOLID ROCK PAD, 400 SY TO BE USED FOR BRIDGE APPROACHES, AND 298 SY TO REBUILD STREAM BANKS.

(18) INCLUDES 759 TONS FOR SLOPE PROTECTION AT THE PROPOSED BRIDGE ABUTMENTS, 498 TONS TO REBUILD STREAM BANKS, AND 78 TONS FOR SPECIAL DITCH.

(19) SEE GRADING SPECIAL NOTES ON SHEET 2D.

(20) TO BE USED WHERE APPROVED BY THE T.D.O.T. MANAGER.

(21) ANY COST OF CLEANING OUT THE REMAINING EXISTING PIPE SHOULD BE INCLUDED IN THE COST OF REMOVAL OF PIPE.

(22) ITEM NUMBER 203-50 SHALL INCLUDE GEOTEXTILE (TYPE IV), BORROW EXCAVATION (GRADED SOLID ROCK) OR MACHINED RIP-RAP (CLASS A-1, CLASS B, OR CLASS C), MINERAL AGGREGATE (SIZE 57), AND TEMPORARY DRAINAGE PIPE (IF APPLICABLE). THE MINERAL AGGREGATE INCLUDES AN ADDITIONAL TEN (10) PERCENT FOR MAINTENANCE. ITEM NUMBER 203-50 INCLUDES THE COST OF REMOVAL OF HAUL ROAD.

FOOTNOTES

(23) INCLUDES 86 SY FOR TEMPORARY CONSTRUCTION ENTRANCE/EXIT, 678 SY FOR TEMPORARY DIVERSION CHANNEL, AND 111 SY FOR SEDIMENT FILTER BAG.

(24) INCLUDES 102 LF FOR SEDIMENT FILTER BAG.

(25) TO BE USED FOR SEDIMENT FILTER BAG.

(26) PERMANENT STABILIZATION WITH NATIVE OR NATURALIZED PERENNIAL VEGETATION IS REQUIRED IN ALL AREAS AUTHORIZED FOR TEMPORARY AND PERMANENT IMPACTS TO STREAMS AND RIPARIAN AREAS, INCLUDING ADJACENT BUFFER ZONES WITHIN 60 FT OF THE EDGE OF WATER. THE APPROPRIATE SEED MIXTURE FOR THE REGION AND SITE CONDITIONS SHALL BE SELECTED FROM TABLE 7.9-1 (PREFERRED SEED MIXES USING NATIVES OR NATURALIZED PLANTS AND PLANTING DATES) FOUND IN CHAPTER 7.9 (PERMANENT VEGETATION) OF THE TENNESSEE DEPARTMENT OF ENVIRONMENT AND CONSERVATION (TDEC) TENNESSEE EROSION & SEDIMENT CONTROL HANDBOOK 4TH EDITION.

(27) ITEM INCLUDES THE COST OF FURNISHING AND INSTALLING DELINEATORS FROM STA. 208+75.24 (RT.) TO BRIDGE END (RT.).

(28) INCLUDES 4 TONS FOR PATCHING AROUND PROPOSED DRAINAGE STRUCTURES #4 AND #7 AND BEHIND PROPOSED RAISED ISLAND CURB FROM STA. 213+11.31 TO STA. 301+60.00.

(29) TO BE USED FOR BRIDGE APPROACHES.

(30) 2 LAYERS AT 4.5" THICK TO BE USED FOR BRIDGE APPROACHES.

TYPE	YEAR	PROJECT NO.	SHEET NO.
PS&E	2024	BR-STP-107(28)	2-1

REV. 09/16/24: MODIFIED FOOTNOTE #14.

SEALED BY

09/16/2024

STATE OF TENNESSEE
DEPARTMENT OF TRANSPORTATION

ESTIMATED ROADWAY QUANTITIES FOOTNOTES

13-SEP-2024 14:03
\\tdot01nas002.tdot.state.tn.us\01Shared\SURVDES\Design\PROJECTS\Unicoi SR 107\002-1 ..SHT

TYPE	YEAR	PROJECT NO.	SHEET NO.
R.O.W.	2020	BR-STP-107(28)	2B
PS&E	2024	BR-STP-107(28)	2B

SEE SHEET 2B2 FOR PAVEMENT SCHEDULE

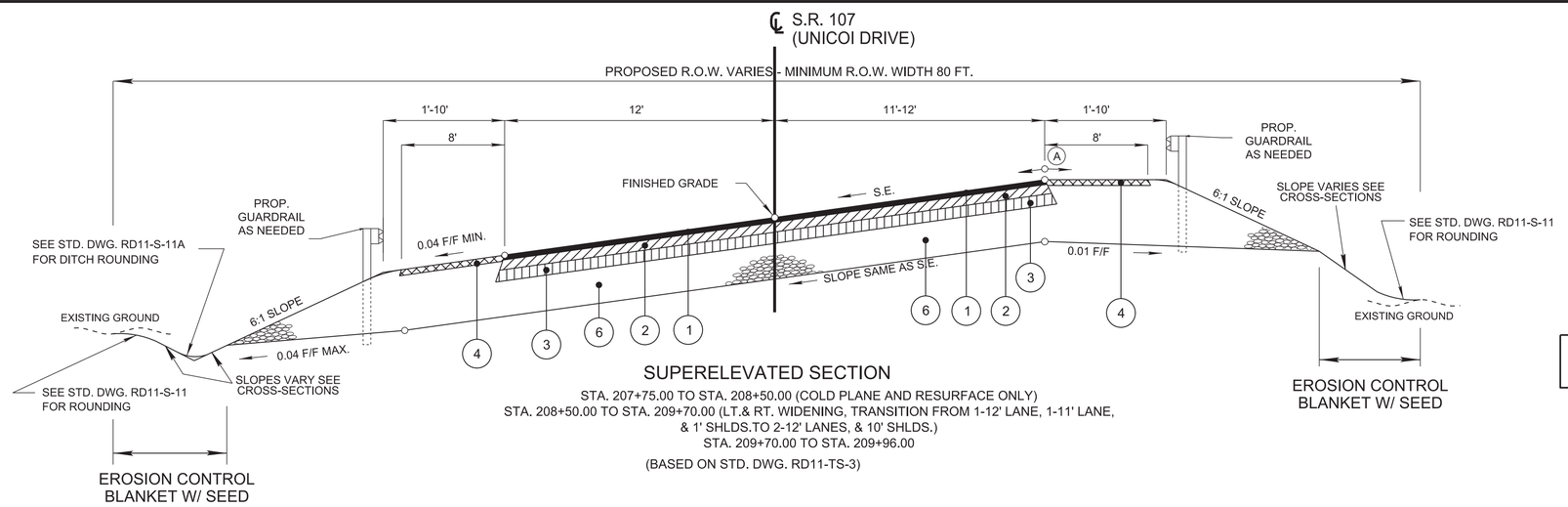

SUPERELEVATED SECTION

STA. 207+75.00 TO STA. 208+50.00 (COLD PLANE AND RESURFACE ONLY)
STA. 208+50.00 TO STA. 209+70.00 (LT.& RT. WIDENING, TRANSITION FROM 1-12' LANE, 1-11' LANE, & 1' SHLDS.TO 2-12' LANES, & 10' SHLDS.)
STA. 209+70.00 TO STA. 209+96.00

(BASED ON STD. DWG. RD11-TS-3)

(A) THE SLOPES OF THE SHOULDER AND ROADWAY PAVEMENT SHALL NOT EXCEED AN ALGEBRAIC DIFFERENCE OF 0.07.

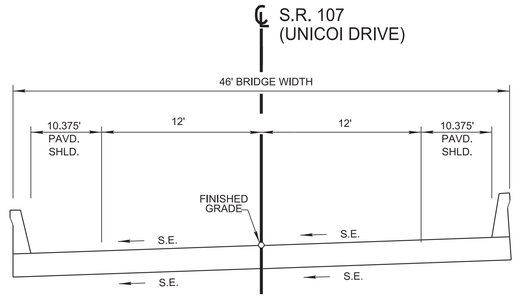

BRIDGE TANGENT SECTION

209+96.00 TO 210+00.46 (APPROACH SLAB/PAVEMENT AT BRIDGE END)

(BASED ON STD. DWG. RD11-TS-3)

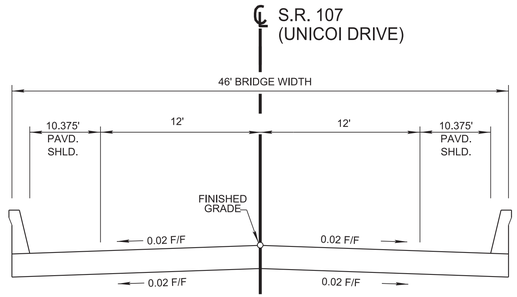

BRIDGE TANGENT SECTION

STA. 210+00.46 TO STA. 210+20.00 (APPROACH SLAB/PAVEMENT AT BRIDGE END)
STA. 210+20.00 TO STA. 211+40.00
STA. 211+40.00 TO STA. 211+64.00 (APPROACH SLAB/PAVEMENT AT BRIDGE END)

(BASED ON STD. DWG. RD11-TS-3)

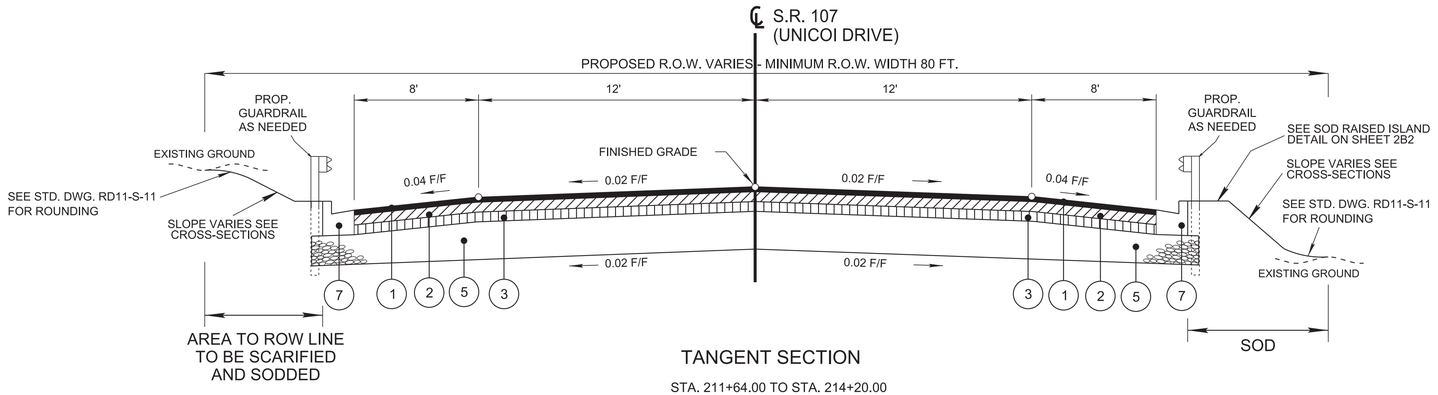

TANGENT SECTION

STA. 211+64.00 TO STA. 214+20.00

(BASED ON STD. DWG. RD11-TS-6B, RD11-TS-3)

SEALED BY

JAMES B. MORGAN
REGISTERED ENGINEER
AGRICULTURE
COMMERCE
11168
STATE OF TENNESSEE

07/31/2024

STATE OF TENNESSEE
DEPARTMENT OF TRANSPORTATION

TYPICAL SECTIONS

31-JUL-2024 10:03
\\tdot01nas002.tdot.state.tn.us\01Shared\SURVDES\Design\PROJECTS\Unicoi SR 107\002B.sht

TYPE	YEAR	PROJECT NO.	SHEET NO.
R.O.W.	2020	BR-STP-107(28)	2B1
PS&E	2024	BR-STP-107(28)	2B1

SEE SHEET 2B2 FOR PAVEMENT SCHEDULE

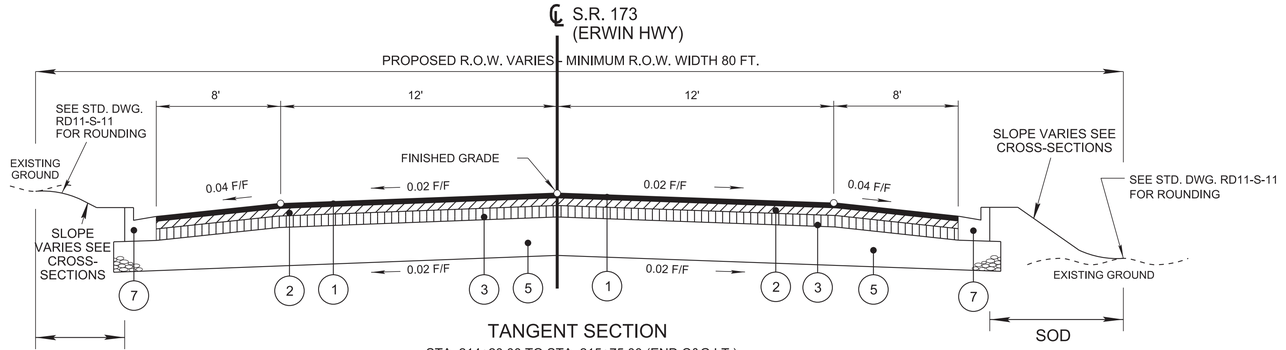

TANGENT SECTION

STA. 214+20.00 TO STA. 215+75.00 (END C&G LT.)
STA. 215+75.00 TO STA. 215+90.00 (10' LT. SHLD. AND 8' RT. SHLD. WITH C&G)
STA. 215+90.00 TO 216+25.00 (TRANSITION TO EXIST. 2-11' LANES, 1-11' SHLD, AND 1-5' SHLD. END C&G RT.)
216+25.00 TO STA. 216+50.00 (COLD PLANE AND RESURFACE ONLY)
(BASED ON STD. DWG. RD11-TS-6B, RD11-TS-3)

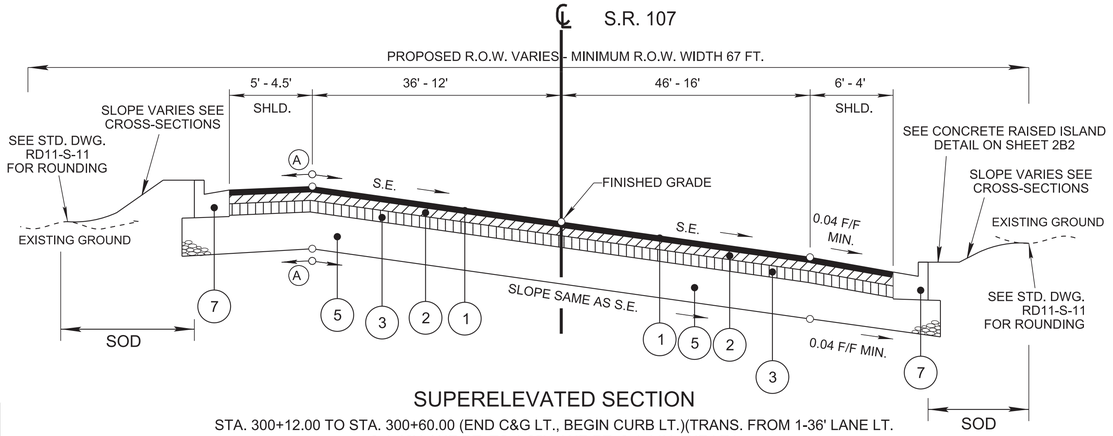

SUPERELEVATED SECTION

STA. 300+12.00 TO STA. 300+60.00 (END C&G LT., BEGIN CURB LT.)(TRANS. FROM 1-36' LANE LT. & 1-46' LANE RT. TO 1-25' LANE RT. & 1-14' LANE LT.)
STA. 300+60.00 TO STA. 301+00.00 (TRANS. FROM 1-25' LANE RT. & 1-14' LANE LT. TO 1-16' LANE RT. & 1-12' LANE LT.)
(BASED ON STD. DWG. RD11-TS-2, RD11-TS-6B)

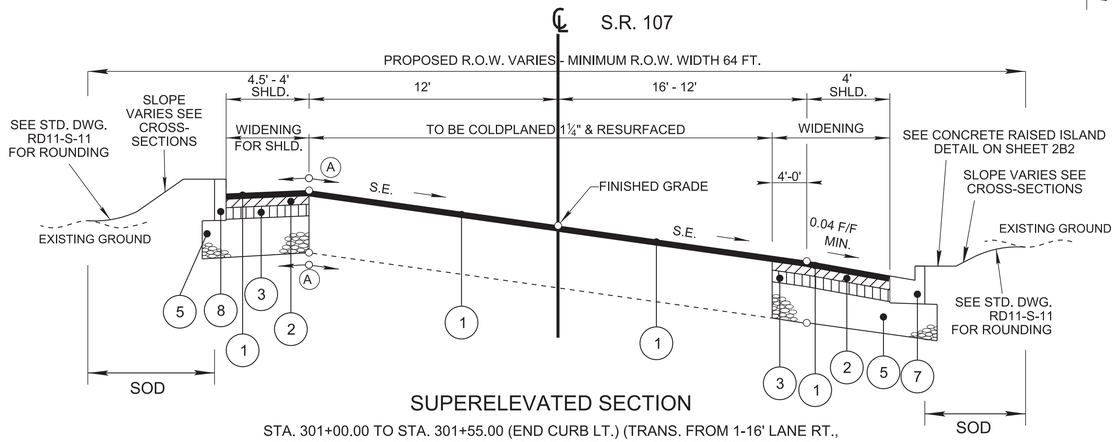

SUPERELEVATED SECTION

STA. 301+00.00 TO STA. 301+55.00 (END CURB LT.) (TRANS. FROM 1-16' LANE RT., 1-12' LANE LT., 1-4' SHLD. RT. & 1-4.5' SHLD. LT. TO 2-12' LANES WITH 4' SHLDS.)
STA. 301+55.00 TO STA. 301+57.14 (2-12' LANES WITH 4' SHLDS.)
(BASED ON STD. DWG. RD11-TS-2, RD11-TS-6B)

A	THE SLOPES OF THE SHOULDER AND ROADWAY PAVEMENT SHALL NOT EXCEED AN ALGEBRAIC DIFFERENCE OF 0.07.

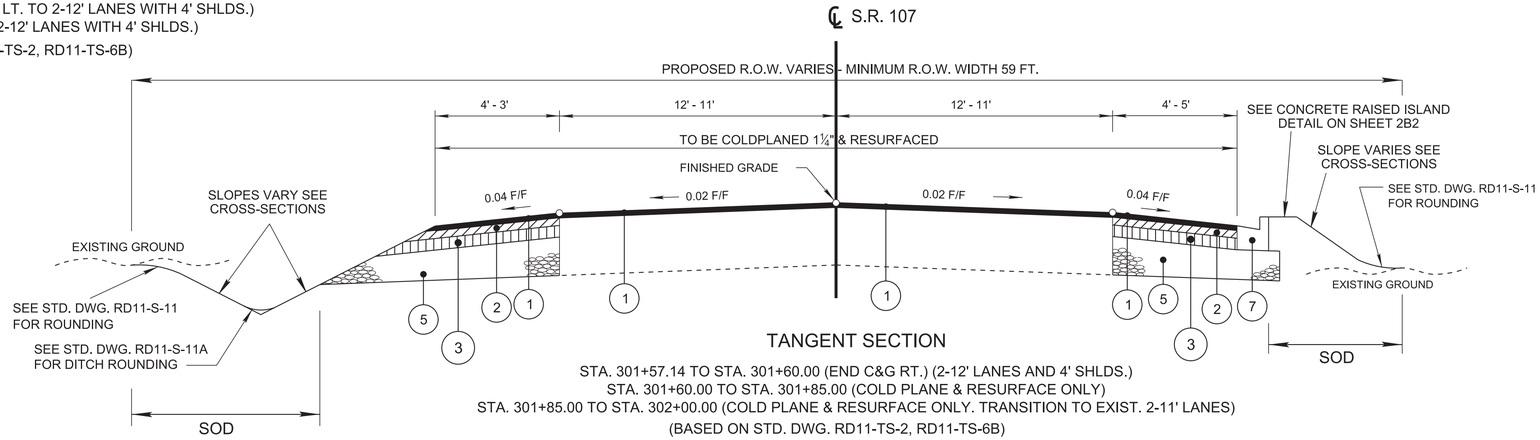

TANGENT SECTION

STA. 301+57.14 TO STA. 301+60.00 (END C&G RT.) (2-12' LANES AND 4' SHLDS.)
STA. 301+60.00 TO STA. 301+85.00 (COLD PLANE & RESURFACE ONLY)
STA. 301+85.00 TO STA. 302+00.00 (COLD PLANE & RESURFACE ONLY. TRANSITION TO EXIST. 2-11' LANES)
(BASED ON STD. DWG. RD11-TS-2, RD11-TS-6B)

SEALED BY

JAMES B. MORGAN
REGISTERED ENGINEER
AGRICULTURE
COMMERCE
No. 111668
STATE OF TENNESSEE

07/31/2024

STATE OF TENNESSEE
DEPARTMENT OF TRANSPORTATION

TYPICAL SECTIONS

31-JUL-2024 10:03
\\tdot01nas002.tdot.state.tn.us\01Shared\SURVDES\Design\PROJECTS\Unicoi SR 107\002B1.sht

SPECIAL DITCH DETAIL #1

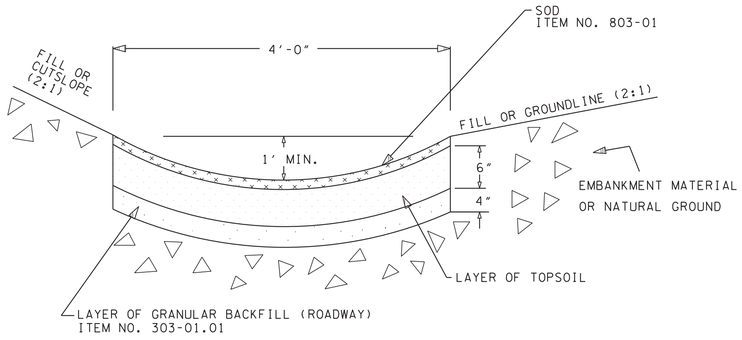

STA. 209+75.00 TO STA. 210+15.00 (LT.) (SPEC. DITCH)

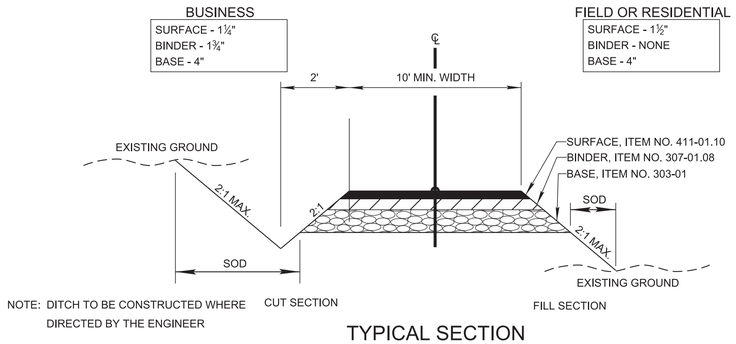

TYPICAL SECTION
PRIVATE DRIVE TO BUSINESS,
FIELD, OR RESIDENTIAL PROPERTY

INDEPENDENT SPECIAL DITCH DETAIL #2

STA. 210+15.00 TO STA. 210+58.65 (LT.) (SPEC. DITCH)

INDEPENDENT SPECIAL DITCH DETAIL #3

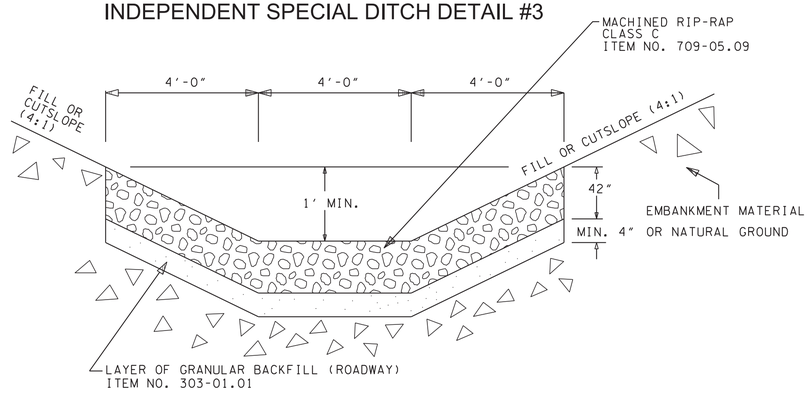

STA. 210+91.42 TO STA. 211+20.00 (RT.) (SPEC. DITCH)

PROPOSED PAVEMENT SCHEDULE

(1) ASPHALTIC CONCRETE SURFACE (HOT MIX) @ 1.25" THICK (APPROX. 132.5 LBS./SQ.YD.)

411-01.10 ACS MIX (PG64-22) GRADING "D"

403-01 BITUMINOUS MATERIAL FOR TACK COAT (TC)
SEE 403-05 FOR DETERMINING APPLICATION RATE IN THE FIELD.

(2) BITUMINOUS PLANT MIX BASE (HOT MIX) @ 2" THICK (APPROX. 226 LBS./SQ.YD.)

307-01.08 ASPHALT CONCRETE MIX (PG64-22)(BPMB-HM) GRADING 'BM-2'

403-01 BITUMINOUS MATERIAL FOR TACK COAT (TC)
SEE 403-05 FOR DETERMINING APPLICATION RATE IN THE FIELD.

(3) BITUMINOUS PLANT MIX BASE (HOT MIX)@ 3" THICK (APPROX. 345 LBS./SQ.YD.)

307-01.01 ASPHALT CONCRETE MIX (PG64-22)(BPMB-HM) GRADING 'A'

402-01 BITUMINOUS MATERIAL FOR PRIME COAT (PC)
(RATE 0.35 GAL/SQ.YD.)

(4) ASPHALTIC CONCRETE SURFACE (HM) 1.50" THICK (APPROX. 159 LBS./SQ.YD.)

411-01.07 ACS MIX (PG64-22) GRADING E RDWY

402-01 BITUMINOUS MATERIAL FOR PRIME COAT (PC)
(RATE 0.35 GAL/SQ.YD.)

(5) MINERAL AGGREGATE BASE @ 8" THICK (ROADWAY)

303-01 MINERAL AGGREGATE, TYPE "A" BASE, GRADING "D"

(6) MINERAL AGGREGATE BASE @ 10" THICK (ROADWAY)

303-01 MINERAL AGGREGATE, TYPE "A" BASE, GRADING "D"

(7) CONCRETE COMBINED CURB AND GUTTER TYPE 6-30 DEPTH 6"

702-03 CONCRETE CURB AND GUTTER
DWG. NO. RP-VC-11

(8) CONCRETE CURB 6" DETACHED CONCRETE CURB

702-01 CONCRETE CURB
DWG. NO. RP-VC-10

CONCRETE RAISED ISLAND DETAIL

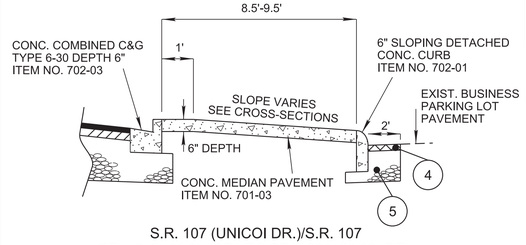

S.R. 107 (UNICOI DR.)/S.R. 107
STA. 213+11.31 (RT.) TO STA. 301+60.00 (RT.)

SOD RAISED ISLAND DETAIL

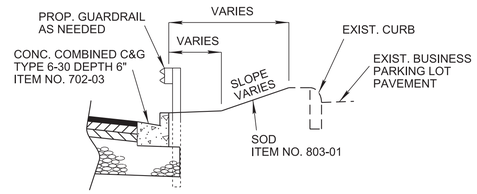

S.R. 107 (UNICOI DR.)
STA. 212+11.00 TO STA. 212+69.00 (RT.)

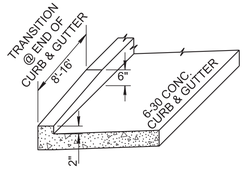

CURB AND GUTTER TRANSITION DETAIL

SEE STD. DWG. RP-VC-11 FOR OTHER DETAILS

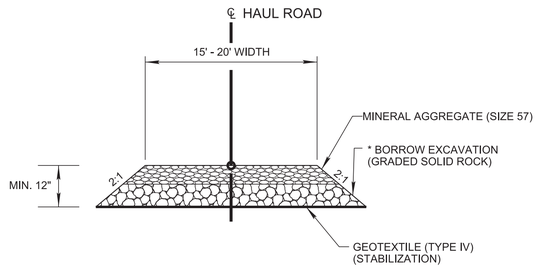

*NOTE: IF CONSTRUCTION IN AREAS THAT ARE EITHER DRY OR UNSATURATED, HAUL ROAD SHALL BE CONSTRUCTED OF BORROW EXCAVATION (GRADED SOLID ROCK). IF CONSTRUCTED IN WATER OR IN AN AREA WITHIN THE FLOODPLAIN IN THE CASE OF A 5 YEAR STORM EVENT, ONE OF THE FOLLOWING MATERIALS SHALL BE USED IN LIEU OF BORROW EXCAVATION (GRADED SOLID ROCK):
- MACHINED RIP-RAP (CLASS A-1)
- MACHINED RIP-RAP (CLASS B)
- MACHINED RIP-RAP (CLASS C)

TYPICAL SECTION
HAUL ROAD
STA. 900+15.00 TO STA. 902+33.95

TYPE	YEAR	PROJECT NO.	SHEET NO.
R.O.W.	2020	BR-STP-107(28)	2B2
PS&E	2024	BR-STP-107(28)	2B2

REV. 02/23/22: MODIFIED SPECIAL DITCH DETAILS #1 AND #2 BACK/FORE SLOPES AND STATION RANGE ON DETAIL #1.

SEALED BY

07/31/2024

STATE OF TENNESSEE
DEPARTMENT OF TRANSPORTATION

TYPICAL SECTIONS AND PAVEMENT SCHEDULE

31-JUL-2024 10:03
\\tdot01nas002.tdot.state.tn.us\01Shared\SURVDES\Design\PROJECTS\Unicoi SR 107\002B2.sht

TYPE	YEAR	PROJECT NO.	SHEET NO.
PS&E	2024	BR-STP-107(28)	2C

GENERAL NOTES

GRADING

(1) ANY AREA THAT IS DISTURBED OUTSIDE LIMITS OF CONSTRUCTION DURING THE LIFE OF THIS PROJECT SHALL BE REPAIRED BY THE CONTRACTOR AT HIS EXPENSE.

(2) CERTIFICATION FOR ALL BORROW PITS MUST BE OBTAINED IN ACCORDANCE WITH SUBSECTION 107.06 OF THE STANDARD SPECIFICATIONS.

(3) THE CONTRACTOR SHALL NOT DISPOSE OF ANY MATERIAL EITHER ON OR OFF STATE-OWNED R.O.W. IN A REGULATORY FLOOD WAY AS DEFINED BY THE FEDERAL EMERGENCY MANAGEMENT AGENCY (FEMA) WITHOUT APPROVAL BY FEMA. ALL MATERIAL SHALL BE DISPOSED OF IN UPLAND (NON-WETLAND) AREAS AND ABOVE ORDINARY HIGH WATER OF ANY ADJACENT WATERCOURSE. THIS DOES NOT ELIMINATE THE NEED TO OBTAIN ANY OTHER LICENSES OR PERMITS THAT MAY BE REQUIRED BY ANY OTHER FEDERAL, STATE OR LOCAL AGENCY.

SEEDING AND SODDING

(2) SOD SHALL BE PLACED AT LOCATIONS SHOWN ON THE PLANS TO PREVENT DAMAGE TO ADJACENT FACILITIES AND PROPERTY DUE TO EROSION ON ALL NEWLY GRADED CUT AND FILL SLOPES AS WORK PROGRESSES.

(5) ITEM NO. 801-02, SEEDING (WITHOUT MULCH) AND EROSION CONTROL BLANKET, SHALL BE PLACED AT LOCATIONS SHOWN ON THE PLANS AS WELL AS LOCATIONS DIRECTED BY THE ENGINEER.

GUARDRAIL

(1) THE CONTRACTOR SHALL NOT REMOVE ANY SECTIONS OF EXISTING GUARDRAIL TO REWORK SHOULDERS OR FLATTEN SLOPES UNTIL THE ENGINEER CONCURS IN THE NECESSITY OF REMOVAL DUE TO CONSTRUCTION REQUIREMENTS AND THE APPROPRIATE WARNING DEVICES ARE INSTALLED. THE PROPOSED GUARDRAIL, INCLUDING ANY ANCHOR SYSTEM, SHALL BE INSTALLED QUICKLY TO MINIMIZE TRAFFIC EXPOSURE TO ANY HAZARD. NO PAYMENT WILL BE MADE FOR A SECTION OF PROPOSED GUARDRAIL, INCLUDING ANCHORS, UNTIL IT IS COMPLETE IN PLACE.

(3) IF ANY APPROACH END OF A SECTION OF GUARDRAIL OR BRIDGE RAIL MUST TEMPORARILY BE LEFT INCOMPLETE AND EXPOSED TO TRAFFIC, THE CONTRACTOR SHALL USE TWO (2) TEMPORARY BARRICADES OR DRUMS WITH TYPE "A" LIGHTS AND ROUNDED END ELEMENTS AS MINIMUM MEASURES TO PROTECT TRAFFIC FROM THE HAZARD OF AN EXPOSED END. ALL COST OF FURNISHING AND INSTALLING TEMPORARY BARRICADES OR DRUMS WITH TYPE "A" LIGHTS TO DELINEATE GUARDRAIL END AND A TEMPORARY ROUNDED END ELEMENT SHALL BE INCLUDED IN THE COST OF THE PROPOSED GUARDRAIL END TERMINAL.

DRAINAGE

(1) THE CONTRACTOR SHALL SHAPE DITCHES TO THE SPECIFIED DESIGN. THIS WORK WILL NOT BE MEASURED AND PAID FOR DIRECTLY, BUT THE COST WILL BE INCLUDED IN THE COST OF OTHER ITEMS.

(2) EXCAVATION FOR PIPE CULVERTS, STORM SEWERS, AND ALL OTHER MINOR STRUCTURES WILL NOT BE MEASURED AND PAID FOR DIRECTLY, BUT WILL BE INCLUDED IN THE PRICE BID PER LINEAR FOOT OF PIPE.

(4) THE CUTTING OF INLET AND OUTLET DITCHES WHERE SHOWN ON PLANS OR AS DIRECTED BY THE ENGINEER WILL BE MEASURED AND PAID FOR AS ITEM NO. 203-01 ROAD AND DRAINAGE EXCAVATION (UNCLASSIFIED).

(5) WHERE A CULVERT (PIPE, SLAB OR BOX) IS MOVED TO A NEW LOCATION OTHER THAN THAT SHOWN ON THE PLANS, INCREASING OR DECREASING THE AMOUNT OF CULVERT EXCAVATION WILL NOT RESULT IN AN INCREASE OR DECREASE IN THE AMOUNT OF PAYMENT THAT WILL BE MADE DUE TO SUCH CHANGE.

(6) DURING CONSTRUCTION OF DRAINAGE STRUCTURES ALL COST ASSOCIATED WITH MAINTAINING THE FLOW OF WATER AND TRAFFIC, AT THESE STRUCTURES, DURING THE PHASED CONSTRUCTION OF THIS PROJECT ARE TO BE INCLUDED IN THE UNIT PRICE OF THE DRAINAGE STRUCTURES AND TRAFFIC CONTROL ITEMS.

(7) ALL EXISTING PIPES AS SHOWN ON PLANS OR AS DIRECTED BY THE ENGINEER THAT ARE TO BE LEFT IN PLACE AND ABANDONED MUST BE BACKFILLED AND PLUGGED. ALL COST FOR THIS WORK SHALL BE INCLUDED IN ITEM NO. 204-08.01, BACKFILL MATERIAL (FLOWABLE FILL), C.Y.

MISCELLANEOUS

(1) ALL DETOUR, ACCESS, SERVICE AND FRONTAGE ROADS SHALL BE CONSTRUCTED WITH A MINIMUM OF ONE (1) COURSE OF BASE MATERIAL BEFORE TRAFFIC IS INTERRUPTED ON EXISTING ROADS.

(2) THE CONTRACTOR SHALL BE REQUIRED TO REMOVE AND RESET MAILBOXES AND POSTS WHERE AND AS DIRECTED BY THE ENGINEER. COST TO BE INCLUDED IN PRICE BID FOR OTHER CONSTRUCTION ITEMS.

(3) NOTHING IN THE GENERAL NOTES OR SPECIAL PROVISIONS SHALL RELIEVE THE CONTRACTOR FROM HIS RESPONSIBILITIES TOWARD THE SAFETY AND CONVENIENCE OF THE GENERAL PUBLIC AND THE RESIDENTS ALONG THE PROPOSED CONSTRUCTION AREA.

PAVEMENT MARKINGS

TEMPORARY PAVEMENT MARKINGS ON INTERMEDIATE LAYERS

(2) TEMPORARY PAVEMENT LINE MARKINGS ON INTERMEDIATE LAYERS OF PAVEMENT SHALL BE REFLECTIVE TAPE OR REFLECTORIZED PAINT INSTALLED TO PERMANENT STANDARDS AT THE END OF EACH DAY'S WORK. SHORT, UNMARKED SECTIONS SHALL NOT BE ALLOWED. THESE MARKINGS WILL BE MEASURED AND PAID FOR UNDER ITEM NO. 716-05.20, PAINTED PAVEMENT MARKING (6" LINE), L.M.

FINAL PAVEMENT MARKING

(8) PERMANENT PAVEMENT LINE MARKINGS SHALL BE 6" ENHANCED FLATLINE THERMOPLASTIC INSTALLED TO PERMANENT STANDARDS AT THE END OF EACH DAY'S WORK. SHORT UNMARKED SECTIONS SHALL NOT BE ALLOWED. PAVEMENT MARKINGS WILL BE MEASURED AND PAID FOR UNDER ITEM NO. 716-12.02, ENHANCED FLATLINE THERMO PVMT MRKNG (6IN LINE), L.M. THE CONTRACTOR SHALL HAVE THE OPTION OF USING REFLECTORIZED PAINT INSTALLED TO PERMANENT STANDARDS AT THE END OF EACH DAY'S WORK AND THEN INSTALLING THE PERMANENT MARKINGS AFTER THE PAVING OPERATION IS COMPLETED. THE TEMPORARY MARKINGS FOR THE FINAL SURFACE WILL NOT BE MEASURED AND PAID FOR DIRECTLY, BUT THE COSTS ARE TO BE INCLUDED IN THE PRICE BID FOR THE PERMANENT MARKINGS.

DETOURS, LANE SHIFTS AND MEDIAN CROSS-OVERS

(17) BEFORE OPENING THE LANE SHIFT TO TRAFFIC, THE TRANSITIONAL MARKINGS ON THE EXISTING ROADWAY MUST BE IN PLACE. THESE MARKINGS WILL BE MEASURED AND PAID FOR UNDER ITEM NO. 712-09.08 PER L.F. ALL EXISTING MARKINGS IN THE AREA OF THESE TRANSITIONAL MARKINGS SHALL BE OBLITERATED AND ALL EXISTING RAISED PAVEMENT MARKERS SHALL BE REMOVED TO ELIMINATE CONFLICTING MARKINGS. REMOVAL OF THE EXISTING CONFLICTING MARKINGS AND RAISED PAVEMENT MARKERS WILL NOT BE MEASURED AND PAID FOR DIRECTLY, BUT THE COST WILL BE INCLUDED IN ITEM NO. 712-01, TRAFFIC CONTROL, LUMP SUM.

PAVEMENT

PAVING

(1) THE CONTRACTOR SHALL BE REQUIRED TO PAVE IN THE DIRECTION OF TRAFFIC.

(2) THE CONTRACTOR SHALL BE REQUIRED TO COLD PLANE AND PAVE IN THE DIRECTION OF TRAFFIC.

(3) THE CONTRACTOR SHALL ATTACH A DEVICE TO THE SCREED OF THE PAVER SUCH THAT MATERIAL IS CONFINED AT THE END GATE AND EXTRUDES THE ASPHALT MATERIAL IN SUCH A WAY THAT RESULTS IN A CONSOLIDATED WEDGE-SHAPE PAVEMENT EDGE OF APPROXIMATELY 25 TO 30 DEGREES AS IT LEAVES THE PAVER (MEASURED FROM A LINE PARALLEL TO THE PAVEMENT SURFACE.) THE DEVICE SHALL MEET THE REQUIREMENTS THAT ARE CURRENTLY SET FORTH IN SPECIAL PROVISION 407SE.

GRADED SOLID ROCK

(1) THE ROCK FILL (GRADED SOLID ROCK) MATERIAL SHALL CONSIST OF SOUND, NON-DEGRADABLE LIMESTONE OR SANDSTONE WITH A MAXIMUM SIZE OF 3'-0". AT LEAST 50% (BY WEIGHT) OF THE ROCK SHALL BE UNIFORMLY DISTRIBUTED BETWEEN 1'-0" AND 3'-0" IN DIAMETER, AND NO GREATER THAN 10% (BY WEIGHT) SHALL BE LESS THAN 2" IN DIAMETER. THE MATERIAL SHALL BE ROUGHLY EQUIDIMENSIONAL; THIN, SLABBY MATERIALS WILL NOT BE ACCEPTED. THE CONTRACTOR SHALL BE REQUIRED TO PROCESS THE MATERIAL WITH AN ACCEPTABLE MECHANICAL MEANS (A SCREENING PROCESS CAPABLE OF PRODUCING THE REQUIRED GRADATION). THE ROCK SHALL BE APPROVED BY A REPRESENTATIVE OF THE DIVISION OF MATERIALS AND TESTS BEFORE USE.

(2) THIS GRADED SOLID ROCK MATERIAL SHALL BE PLACED IN LAYERS NOT EXCEEDING FIVE FEET IN DEPTH.

SIGNING

(2) FOR ALL PERMANENT PANEL SIGNS WITH A SILVER-WHITE, YELLOW, RED, GREEN, BROWN, OR BLUE BACKGROUND, PROVIDE REFLECTIVE SHEETING THAT MEETS OR EXCEEDS AASHTO M268, TYPE D.

(4) THE TOP OF THE SIGN FOOTINGS SHALL BE PLACED LEVEL WITH THE GROUND LINE.

(5) AFTER THE SIGN LOCATIONS HAVE BEEN STAKED, BUT PRIOR TO ORDERING ANY MATERIAL FOR THE SUPPORTS, THERE SHALL BE A FIELD INSPECTION AND APPROVAL BY THE REGIONAL CONSTRUCTION OFFICE.

(7) ALL SIGNS MARKED "TO BE REMOVED" ARE TO BE REMOVED BY THE CONTRACTOR AND PAID FOR UNDER ITEM NO. 713-15 AND BECOME THE PROPERTY OF THE CONTRACTOR.

(8) THE EXISTING FOOTINGS ARE TO BE REMOVED 6 INCHES BELOW GROUND LINE.

(9) THE LETTERS, DIGITS, ARROWS, BORDERS, AND ALPHABET ACCESSORIES ON ALL FLAT SHEET SIGNS SHALL BE APPLIED BY SILK SCREENING PROCESS, EXCEPT THAT CUT-OUT DIRECT APPLIED COPY SHALL BE USED ON ALL FLAT SHEET SIGNS WITH A GREEN BACKGROUND, OR BROWN BACKGROUND.

(10) THE LENGTHS OF ALL SIGN SUPPORTS SHOWN ON THE SIGN SCHEDULE ARE APPROXIMATE AND ARE FOR ESTIMATING PURPOSES ONLY. THE CONTRACTOR SHALL VERIFY ALL SUPPORT LENGTHS AT THE SITE PRIOR TO ERECTION.

(12) ALL SIGNS WHICH INTERFERE WITH CONSTRUCTION WILL BE RELOCATED OUTSIDE LIMITS OF CONSTRUCTION BY THE CONTRACTOR. UPON COMPLETION OF CONSTRUCTION, THE CONTRACTOR WILL RESTORE THE SIGNS TO ORIGINAL LOCATION. THE CONTRACTOR SHALL CHECK WITH THE REGIONAL TRAFFIC ENGINEER PRIOR TO MOVING ANY PERMANENT SIGNS.

TRAFFIC CONTROL DIRECTIONAL SIGNING

(7) WHEN EXISTING "TOURIST ORIENTED DIRECTIONAL SIGNS" (TODS) ARE ON NON-ACCESS CONTROLLED CONSTRUCTION PROJECTS, THE CONTRACTOR SHALL BE RESPONSIBLE FOR KEEPING THESE SIGNS IN FULL VIEW TO THE MOTORING PUBLIC DURING ALL PHASES OF CONSTRUCTION. ALL WORK IN MOVING THESE "TODS" AND TEMPORARY SUPPORTS ARE TO BE PAID FOR UNDER ITEM NO. 712-06, AS DIRECTED BY THE ENGINEER. NEW SUPPORTS AND SIGN FACE FOR FINAL LOCATION WILL BE PAID FOR UNDER OTHER ITEMS OF CONSTRUCTION.

SEALED BY

07/31/2024

STATE OF TENNESSEE
DEPARTMENT OF TRANSPORTATION

GENERAL NOTES

31-JUL-2024 10:03
\\tdot01nas002.tdot.state.tn.us\01Shared\SURVDES\Design\PROJECTS\Unicoi SR 107\002C.sht

TYPE	YEAR	PROJECT NO.	SHEET NO.
PS&E	2024	BR-STP-107(28)	2C1

GENERAL NOTES, CONT'D

CONSTRUCTION WORK ZONE & TRAFFIC CONTROL

(1) ADVANCED WARNING SIGNS SHALL NOT BE DISPLAYED MORE THAN FORTY-EIGHT (48) HOURS BEFORE PHYSICAL CONSTRUCTION BEGINS. SIGNS MAY BE ERECTED UP TO ONE WEEK BEFORE NEEDED, IF THE SIGN FACE IS FULLY COVERED.

(2) IF THE CONTRACTOR MOVES OFF THE PROJECT, HE SHALL COVER OR REMOVE ALL UNNEEDED SIGNS AS DIRECTED BY THE ENGINEER. COSTS OF REMOVAL, COVERING, AND REINSTALLING SIGNS SHALL NOT BE MEASURED AND PAID FOR SEPARATELY, BUT ALL COSTS SHALL BE INCLUDED IN THE ORIGINAL UNIT PRICE BID FOR ITEM NO. 712-06, SIGNS (CONSTRUCTION) PER SQUARE FOOT.

(3) A LONG TERM BUT SPORADIC USE WARNING SIGN, SUCH AS A FLAGGER SIGN, MAY REMAIN IN PLACE WHEN NOT REQUIRED PROVIDED THE SIGN FACE IS FULLY COVERED.

(4) TRAFFIC CONTROL DEVICES SHALL NOT BE DISPLAYED OR ERECTED UNLESS RELATED CONDITIONS ARE PRESENT NECESSITATING WARNING.

(5) USE OF BARRICADES, PORTABLE BARRIER RAILS, AND DRUMS SHALL BE LIMITED TO THE IMMEDIATE AREAS OF CONSTRUCTION WHERE A HAZARD IS PRESENT. THESE DEVICES SHALL NOT BE STORED ALONG THE ROADWAY WITHIN THIRTY (30) FEET OF THE EDGE OF THE TRAVELED WAY BEFORE OR AFTER USE UNLESS PROTECTED BY GUARDRAIL, BRIDGE RAIL, AND/OR BARRIERS INSTALLED FOR OTHER PURPOSES FOR ROADWAYS WITH CURRENT ADT'S LESS THAN 1500 AND DESIGN SPEED OF LESS THAN 60 MPH. THIS DISTANCE SHALL INCREASE TO FORTY-FIVE (45) FEET FOR ROADWAYS WITH CURRENT ADT'S OF 1500 OR GREATER AND DESIGN SPEED OF 60 MPH OR GREATER OR ON THE OUTSIDE OF A HORIZONTAL CURVE. THESE DEVICES SHALL BE REMOVED FROM THE CONSTRUCTION WORK ZONE WHEN THE ENGINEER DETERMINES THEY ARE NO LONGER NEEDED. WHERE THERE IS INSUFFICIENT RIGHT-OF-WAY TO PROVIDE FOR THIS REQUIRED SETBACK, THE CONTRACTOR SHALL DETERMINE THE ALTERNATE LOCATIONS AND REQUEST THE ENGINEER'S APPROVAL TO USE THEM.

(6) THE CONTRACTOR SHALL NOT BE PERMITTED TO PARK ANY VEHICLES OR CONSTRUCTION EQUIPMENT DURING PERIODS OF INACTIVITY, WITHIN THIRTY (30) FEET OF THE EDGE OF PAVEMENT WHEN THE LANE IS OPEN TO TRAFFIC UNLESS PROTECTED BY GUARDRAIL, BRIDGE RAIL, AND/OR BARRIERS INSTALLED FOR OTHER PURPOSES FOR ROADWAYS WITH CURRENT ADT'S LESS THAN 1500 AND DESIGN SPEED OF LESS THAN 60 MPH. THIS DISTANCE SHALL BE INCREASED TO FORTY-FIVE (45) FEET FOR ROADWAYS WITH CURRENT ADT'S OF 1500 OR GREATER AND DESIGN SPEED OF 60 MPH OR GREATER OR ON THE OUTSIDE OF A HORIZONTAL CURVE. PRIVATELY OWNED VEHICLES SHALL NOT BE ALLOWED TO PARK WITHIN THIRTY (30) FEET OF AN OPEN TRAFFIC LANE AT ANY TIME UNLESS PROTECTED AS DESCRIBED ABOVE FOR ROADWAYS WITH CURRENT ADT'S LESS THAN 1500 AND DESIGN SPEED OF LESS THAN 60 MPH. THIS DISTANCE SHALL BE INCREASED TO FORTY-FIVE (45) FEET FOR ROADWAYS WITH CURRENT ADT'S OF 1500 OR GREATER AND DESIGN SPEED OF 60 MPH OR GREATER OR ON THE OUTSIDE OF A HORIZONTAL CURVE. WHERE THERE IS INSUFFICIENT RIGHT-OF-WAY TO PROVIDE FOR THIS REQUIRED SETBACK, THE CONTRACTOR SHALL DETERMINE THE ALTERNATE LOCATIONS AND REQUEST THE ENGINEER'S APPROVAL TO USE THEM.

(7) ALL DETOUR AND CONSTRUCTION SIGNING SHALL BE IN STRICT ACCORDANCE WITH THE MANUAL ON UNIFORM TRAFFIC CONTROL DEVICES.

(8) ALL DETOURS SHALL BE PAVED, STRIPED, SIGNED, AND FLEXIBLE DRUMS ARE TO BE IN PLACE BEFORE IT IS OPENED TO TRAFFIC.

(9) THE CONTRACTOR SHALL BE RESPONSIBLE FOR STAKING CONSTRUCTION SIGNS. THE COST OF THIS WORK SHALL BE INCLUDED IN ITEM NO. 712-06, SIGNS (CONSTRUCTION), S.F.

SEALED BY

07/31/2024

STATE OF TENNESSEE
DEPARTMENT OF TRANSPORTATION

GENERAL NOTES

31-JUL-2024 10:04
\\tdot01nas002.tdot.state.tn.us\01Shared\SURVDES\Design\PROJECTS\Unicoi SR 107\002C1.sht

TYPE	YEAR	PROJECT NO.	SHEET NO.
PS&E	2024	BR-STP-107(28)	2D

SPECIAL NOTES

GRADING

(1) THE GRADING TABULATIONS AND RESULTING EARTHWORK ASSOCIATED BID QUANTITIES WERE PREPARED UTILIZING AVAILABLE GEOTECHNICAL INFORMATION AND/OR REPORTS PREPARED FOR THIS PROJECT. THIS INFORMATION IS PROVIDED FOR GENERAL INFORMATION AND ESTIMATION GUIDANCE ONLY.

(2) BORING DEPICTIONS SHOWN ON THE FOUNDATION DATA SHEETS, SOILS SHEETS, PLANS, AND CROSS-SECTIONS INDICATE SOIL AND ROCK CONDITIONS AT THE SPECIFIC BORING LOCATIONS. ANY SOIL PROFILE AND/OR ROCK LINE IS INTERPRETIVE BASED ON THE JUDGMENT OF THE GEOTECHNICAL ENGINEER/GEOLOGIST. THE TRANSITION BETWEEN BORINGS AND LAYERS MAY VARY SIGNIFICANTLY DEPENDING ON THE GEOLOGIC FORMATIONS ENCOUNTERED.

(3) TO ASSIST IN BID PREPARATION FOR EARTHWORK AND FOUNDATION CONSTRUCTION, DETAIL ROCK AND SOIL DESCRIPTION AND ON SOME PROJECTS, ROCK CORE SAMPLES ARE AVAILABLE FOR INSPECTION AT THE MATERIALS AND TESTS HEADQUARTERS AT 6601 CENTENNIAL BOULEVARD, NASHVILLE, TN OR AT THE TDOT REGION 1 BUILDING IN KNOXVILLE, TN.

(4) THE CONTRACTOR SHALL UTILIZE ALL INFORMATION PROVIDED IN THE PLANS, CROSS-SECTIONS AND CONTRACT DOCUMENTS INCLUDING ANY SPECIAL PROVISIONS AS WELL AS UTILIZING HIS PAST EXPERIENCE WITH PROJECTS OF SIMILAR NATURE, SCOPE AND LOCATION IN PREPARATION OF HIS BID FOR EARTHWORK ITEMS. IT IS THE CONTRACTOR'S RESPONSIBILITY TO DETERMINE AND PROVIDE EQUIPMENT AND MEANS NECESSARY TO CONDUCT THE EXCAVATION ACTIVITIES IN ACCORDANCE WITH PLANS AND SPECIFICATIONS.

(5) EARTHWORK IS PAID FOR UNDER ITEM NO. 203-01, ROAD AND DRAINAGE EXCAVATION (UNCLASSIFIED). NO ADDITIONAL PAYMENT WILL BE MADE FOR EARTHWORK QUANTITIES BASED SOLELY ON A CLAIM THAT THE QUANTITIES SHOWN IN THE GRADING TABULATION OR ELSEWHERE IN THE PLANS ARE INACCURATE WITH RESPECT TO THE TYPE OF MATERIALS ENCOUNTERED DURING CONSTRUCTION EXCEPT AS PROVIDED FOR BY SECTION 104.02 IN THE CURRENT EDITION OF THE STANDARD SPECIFICATIONS FOR ROAD AND BRIDGE CONSTRUCTION OR AS AMENDED IN SUPPLEMENTAL SPECIFICATIONS.

DEMOLITION

DEMOLITION, REPAIR, OR REHABILITATION OF BRIDGES

(1) THE CONTRACTOR SHALL VERIFY THAT AN ASBESTOS SURVEY HAS BEEN COMPLETED PRIOR TO ANY DEMOLITION, REPAIR OR REHABILITATIONS ACTIVITIES (NOT INCLUDING ASPHALT MILLING OR OVERLAY).

(2) ASBESTOS-CONTAINING MATERIALS (ACM) ABATEMENT IS THE RESPONSIBILITY OF THE CONTRACTOR AND SHALL BE COMPLETED PRIOR TO ANY DEMOLITION, REPAIR OR REHABILITATION OF BRIDGE(S). ABATEMENT SHOULD BE ACCOMPLISHED PER SP202ACM SPECIAL PROVISION REGARDING REMOVAL OF ASBESTOS-CONTAINING MATERIALS. STATE OF TENNESSEE ASBESTOS ACCREDITATION REQUIREMENTS (TCA 1200-01-20) MANDATE THAT ACM ABATEMENT WORK BE PERFORMED BY AN ACCREDITED FIRM (CONTRACTOR) USING ACCREDITED ABATEMENT WORKERS AND SUPERVISORS.

(3) THE CONTRACTOR SHALL BE RESPONSIBLE FOR SUBMITTING A NOTICE TO THE TDEC, DIVISION OF AIR POLLUTION CONTROL TEN (10) DAYS IN ADVANCE OF ANY ACM ABATEMENT, DEMOLITION, OR MAJOR REPAIR INVOLVING THE REMOVAL/REPLACEMENT OF A STRUCTURAL COMPONENT.

SEALED BY

07/31/2024

STATE OF TENNESSEE
DEPARTMENT OF TRANSPORTATION

SPECIAL NOTES

31-JUL-2024 10:05
\\tdot01nas002.tdot.state.tn.us\01Shared\SURVDES\Design\PROJECTS\Unicoi SR 107\002D.sht

TYPE	YEAR	PROJECT NO.	SHEET NO.
PS&E	2024	BR-STP-107(28)	2E

ENVIRONMENTAL NOTES

SUBSECTION 1 – ENVIRONMENTAL GENERAL NOTES

ENVIRONMENTAL GENERAL NOTES

NATURAL RESOURCES

(1) SOIL MATERIALS MUST BE PREVENTED FROM ENTERING WATERS OF THE STATE/U.S. EPSC MEASURES TO PROTECT NATURAL RESOURCES AND WATER QUALITY SHALL BE MAINTAINED THROUGHOUT THE CONSTRUCTION PERIOD. APPROPRIATE EPSC MEASURES MUST BE INSTALLED ALONG THE BASE OF ALL FILLS AND CUTS, ON THE DOWNHILL SIDE OF STOCKPILED SOIL, AND ALONG NATURAL RESOURCES IN CLEARED AREAS TO PREVENT SEDIMENT MIGRATION INTO STREAMS, WETLANDS OR OTHER NATURAL FEATURES IN ACCORDANCE WITH TDOT STANDARDS. EPSC MEASURES SHALL BE INSTALLED ON THE CONTOUR, ENTRENCHED AND STAKED, AND EXTEND THE WIDTH OF THE AREA TO BE CLEARED.

(2) NEW CHANNEL CONSTRUCTION SHALL BE COMPLETED IN THE DRY AND STABILIZED FOR AT LEAST 72 HOURS PRIOR TO DIVERTING WATER FROM THE EXISTING AND/OR TEMPORARY CHANNEL.

(3) INSTREAM EPSC DEVICES REQUIRE THE TDOT ENVIRONMENTAL DIVISION, PERMITS SECTION REVIEW AND MUST BE PROCESSED BY THE PERMITS SECTION TO OBTAIN WATER QUALITY PERMITS.

(4) THE OPERATION OF EQUIPMENT IN WATERS OF THE STATE/U.S., INCLUDING WETLANDS AND EPHEMERAL, INTERMITTENT, AND PERENNIAL STREAMS, IS NOT ALLOWED.

(5) THE WIDTH OF THE FILL ASSOCIATED WITH TEMPORARY CROSSINGS SHALL BE LIMITED TO THE MINIMUM NECESSARY FOR THE ACTUAL CROSSING, NOT TO EXCEED THE WIDTH SPECIFIED IN THE STANDARD DRAWING.

(6) STREAM BEDS SHALL NOT BE USED AS TRANSPORTATION ROUTES FOR CONSTRUCTION EQUIPMENT. TEMPORARY CULVERT CROSSINGS SHALL BE LIMITED TO ONE POINT PER STREAM AND EPSC MEASURES SHALL BE USED WHERE THE STREAM BANKS ARE DISTURBED. WHERE THE STREAMBED IS NOT COMPOSED OF BEDROCK, A PAD OF CLEAN ROCK SHALL BE USED AT THE CROSSING POINT AND CULVERTED TO PREVENT THE IMPOUNDMENT OF WATER FLOW. CLEAN ROCK IS ROCK OF VARIOUS TYPE AND SIZE, DEPENDING UPON APPLICATION, WHICH CONTAINS NO FINES, SOILS, OR OTHER WASTES OR CONTAMINANTS. OTHER MATERIALS USED FOR ALL TEMPORARY FILLS SHALL BE COMPLETELY REMOVED IN THEIR ENTIRETY AFTER THE WORK IS COMPLETED AND THE AFFECTED AREAS RETURNED TO PREEXISTING ELEVATIONS. ALL TEMPORARY CROSSINGS SHALL BE CONSTRUCTED IN ACCORDANCE WITH STD. DWG. EC-STR-25 UNLESS SPECIFICALLY ADDRESSED IN THE EPSC PLANS. ALTERNATIVELY, PLACING A TEMPORARY BRIDGE (E.G. BAILEY BRIDGE OR EQUIVALENT, TIMBERS, ETC.) FROM TOP OF BANK TO TOP OF BANK OR THE APPROPRIATE USE OF BARGES AT THE CROSSING TO AVOID DISTURBANCE OF THE STREAMBED IS AN ACCEPTABLE OPTION.

(7) HEAVY EQUIPMENT WORKING IN WETLANDS WITH PERMITTED TEMPORARY IMPACTS SHALL BE PLACED ON MATS, OR OTHER MEASURES MUST BE TAKEN TO MINIMIZE SOIL DISTURBANCE AND COMPACTION UNLESS SPECIFICALLY ADDRESSED IN THE CONSTRUCTION PLANS. ANY MATS AND OTHER MEASURES USED FOR HEAVY EQUIPMENT SHALL BE REMOVED IN THEIR ENTIRETY AFTER THE WORK IS COMPLETED. ALL AFFECTED AREAS SHOULD BE RETURNED TO PRE-EXISTING CONDITIONS.

(8) WETLANDS SHALL NOT BE USED AS EQUIPMENT STORAGE, STAGING, OR TRANSPORTATION AREAS, UNLESS SPECIFICALLY PROVIDED FOR IN THE CONSTRUCTION PLANS AND PERMITS.

(9) THE CONTRACTOR SHALL TAKE APPROPRIATE STEPS PRIOR TO ANY CONSTRUCTION AND MAINTENANCE ACTIVITIES TO ENSURE THAT ENVIRONMENTAL FEATURES (E.G., STREAMS, WETLANDS, SPRINGS, ETC.) ARE NOT IMPACTED BEYOND PERMITTED LOCATIONS. IF THE CONTRACTOR OR TDOT INSPECTOR IS UNSURE OF THE IDENTITY OF AN ENVIRONMENTAL FEATURE, THE INSPECTOR SHALL CONTACT THE TDOT REGION ENVIRONMENTAL TECH GROUP IMMEDIATELY.

SPECIES

(10) NO ACTIVITY MAY SUBSTANTIALLY DISRUPT THE MOVEMENT OF THOSE SPECIES OF AQUATIC LIFE INDIGENOUS TO THE WATER BODY, INCLUDING THOSE SPECIES THAT NORMALLY MIGRATE THROUGH THE AREA.

(11) SHOULD CLIFF SWALLOW OR BARN SWALLOW NESTS, EGGS, OR BIRDS (YOUNG AND ADULTS) BE PRESENT, THE CONTRACTOR SHALL CONTACT THE REGIONAL ECOLOGY OFFICE TO DETERMINE IF SEASONAL RESTRICTIONS WILL BE NECESSARY. GENERALLY, BIRDS, NESTS, AND EGGS MAY NOT BE DISTURBED BETWEEN APRIL 15 AND JULY 31. FROM AUGUST 1 TO APRIL 14, NESTS CAN BE REMOVED OR DESTROYED SO LONG AS BIRDS OR EGGS ARE NOT PRESENT, AND MEASURES IMPLEMENTED TO PREVENT FUTURE NEST BUILDING AT THE SITE (I.E., CLOSING OFF AREA USING NETTING).

(12) IF THE REMOVAL OF ANY TREES WITH A DIAMETER AT BREAST HEIGHT (DBH) GREATER THAN 3 INCHES IS DEEMED NECESSARY THE TDOT SUPERVISOR SHALL CONTACT THE TDOT ENVIRONMENTAL DIVISION, ECOLOGY SECTION IMMEDIATELY.

PERMITS, PLANS & RECORDS

(13) THE CONTRACTOR SHALL BE SOLELY RESPONSIBLE FOR AND OBTAIN ANY NECESSARY ENVIRONMENTAL PERMITS OR APPROVALS, INCLUDING BUT NOT LIMITED TO ARCHAEOLOGY, ECOLOGY, HISTORICAL, HAZARDOUS MATERIALS, AIR AND NOISE, TDEC ARAP/401, USACE SECTION 404, TVA SECTION 26A, AND TDEC NPDES PERMITS, FROM FEDERAL, STATE AND/OR LOCAL AGENCIES REGARDING ANY MATERIAL AND STAGING AREAS AND THE OPERATION OF ANY PROJECT-DEDICATED ASPHALT AND/OR CONCRETE PLANTS TO BE USED. ANY SUCH PERMITS SHALL BE SUPPLIED TO THE TDOT PROJECT RESPONSIBLE PARTY PRIOR TO THE USE OF THE PERMITTED AREA(S).

(14) ANY DISAGREEMENT BETWEEN THE CONSTRUCTION PLANS, THE PROJECT AS CONSTRUCTED, AND THE PERMIT(S) ISSUED FOR THE PROJECT, SHALL BE BROUGHT TO THE ATTENTION OF THE TDOT PROJECT RESPONSIBLE PARTY. THE ENVIRONMENTAL DIVISION, DESIGN DIVISION, AND HEADQUARTERS CONSTRUCTION OFFICE SHALL BE CONTACTED IN THESE INSTANCES AND DECIDE WHICH HAS PRECEDENCE AND WHETHER PERMIT OR PLANS REVISIONS ARE NEEDED. IN GENERAL, PERMIT CONDITIONS WILL PREVAIL.

(15) IF A CHANGE IN PROJECT SCOPE OCCURS DURING CONSTRUCTION, INCLUDING VALUE ENGINEERING, THE TDOT PERMIT SECTION SHALL BE CONTACTED TO DETERMINE WHETHER PERMIT REVISIONS ARE NEEDED. THE ROADWAY DESIGN DIVISION SHALL BE CONTACTED TO DETERMINE IF ANY PLAN REVISIONS ARE NEEDED.

(16) THE CONTRACTOR SHALL REVIEW ALL EXISTING PERMITS TO ENSURE THAT WORK AT PERMITTED SITES DOES NOT EXCEED EXPIRATION DATE. IF WORK IS GOING TO BE CONTINUED AFTER EXPIRATION DATES, THE CONTRACTOR SHALL CONTACT THE TDOT PROJECT RESPONSIBLE PARTY TO COMMENCE PERMIT RENEWAL PROCESS.

(17) ALL WATER QUALITY PERMITS SHALL BE POSTED NEAR THE MAIN ENTRANCE OF THE CONSTRUCTION SITE ACCESSIBLE TO THE PUBLIC. THE NAME, COMPANY NAME, EMAIL ADDRESS, TELEPHONE NUMBER AND ADDRESS OF THE PROJECT SITE OWNER, OPERATOR, OR A LOCAL CONTACT PERSON WITH A BRIEF DESCRIPTION OF THE PROJECT SHALL ALSO BE POSTED. IF POSTING THIS INFORMATION NEAR A MAIN ENTRANCE IS INFEASIBLE, THE INFORMATION SHALL BE PLACED IN A PUBLICLY ACCESSIBLE LOCATION NEAR WHERE THE CONSTRUCTION IS ACTIVELY UNDERWAY AND MOVED AS NECESSARY. THIS LOCATION SHALL BE POSTED AT THE CONSTRUCTION SITE. ALL POSTINGS SHALL BE MAINTAINED IN LEGIBLE CONDITION.

SUPPORT ACTIVITIES

(18) MATERIALS AND STAGING AREAS SHALL NOT AFFECT ANY WATERS OF THE STATE/U.S. UNLESS THESE AREAS ARE SPECIFICALLY COVERED BY ENVIRONMENTAL PERMITS, OBTAINED SOLELY BY THE CONTRACTOR. THE CONTRACTOR SHALL REVIEW ALL EXISTING PERMITS TO ENSURE THAT WORK AT PERMITTED SITES DOES NOT EXCEED EXPIRATION DATES. IF WORK IS GOING TO BE CONTINUED AFTER EXPIRATION DATES, THE CONTRACTOR SHALL CONTACT THE TDOT PROJECT RESPONSIBLE PARTY TO COMMENCE PERMIT RENEWAL PROCESS.

ENVIRONMENTAL

(20) EXCEPT AS OTHERWISE SPECIFIED, THERE ARE NO KNOWN SPECIAL ENVIRONMENTAL FACTORS PRESENT ON THIS PROJECT THAT INDICATE A NEED FOR SEASONAL LIMITATIONS ON THE CLEARING, GRUBBING, EXCAVATION, GRADING, CUTTING OR FILLING OPERATIONS OR ON THE TOTAL AREA OF EXPOSED SOIL.

SUBSECTION 2 – ENVIRONMENTAL SPECIAL NOTES

ENVIRONMENTAL SPECIAL NOTES

ENVIRONMENTAL

(1) STAFF FROM THE TDOT ENVIRONMENTAL DIVISION COMPLIANCE AND FIELD SERVICES OFFICE SHALL BE INVITED TO ALL PRE-CONSTRUCTION MEETINGS.

ECOLOGY

(2) STAFF FROM THE TDOT ENVIRONMENTAL DIVISION OR A DESIGNEE SHALL ADVISE THE CONTRACTOR DURING THE PRE-CONSTRUCTION MEETING WHEN ENVIRONMENTAL DIVISION PERSONNEL OR A DESIGNATED CONSULTANT WILL NEED TO BE ONSITE FOR WORK BEING DONE WHICH COULD AFFECT WATERS OF THE STATE/U.S. OR SPECIES.

(3) STAFF FROM THE TDOT ENVIRONMENTAL DIVISION OR A DESIGNEE SHALL ATTEND THE PRE-CONSTRUCTION MEETING FOR ALL PROJECTS WHICH HAVE THREATENED OR ENDANGERED SPECIES OR CRITICAL HABITAT PROXIMAL TO SCHEDULED WORK. THIS WILL PROVIDE THE OPPORTUNITY TO ENSURE THAT PERSONNEL INCLUDING THE CONTRACTOR'S PERSONNEL AND SUBCONTRACTORS ARE MADE AWARE OF THE NECESSARY PRECAUTIONS THAT MUST BE FOLLOWED.

(4) ALL PROJECTS WITH LEGALLY PROTECTED SPECIES OR CRITICAL HABITAT IDENTIFIED SHALL HAVE MEASURES IN PLACE TO CONTAIN CONCRETE DUST, CEMENT DUST AND ALL OTHER MATERIALS. THESE MATERIALS ARE NOT ALLOWED TO ENTER WATERS OF THE STATE/U.S.

PROJECT COMMITMENTS

(5) SEE PROJECT COMMITMENTS, SHEET 1B, FOR DETAILS RELATING TO SPECIAL ENVIRONMENTAL COMMITMENTS REQUIRED BY THIS PROJECT.

SCOPE OF WORK

(6) THIS PROJECT INCLUDES REMOVAL OF AN EXISTING CONCRETE BRIDGE, INSTALLATION OF A NEW CONCRETE BRIDGE, GRADING, DRAINAGE, BASE, AND PAVEMENT FROM LINES AND GRADES AS INDICATED ON THE PLANS. IT INCLUDES THE INSTALLATION OF CURB, CURB AND GUTTER, SIGNS, GUARDRAIL, AND DRAINAGE STRUCTURES, AS WELL AS, THE APPLICATION OF PAVEMENT MARKINGS, SOD, TRAFFIC CONTROL DEVICES, EPSC DEVICES, AND OTHER FEATURES AS INDICATED ON THE PLANS OR AS DIRECTED BY THE TDOT MANAGER.

SEALED BY

JAMES B. MORGAN
REGISTERED ENGINEER
DEPARTMENT OF AGRICULTURE
DEPARTMENT OF COMMERCE & INSURANCE
No. 111668
STATE OF TENNESSEE

07/31/2024

STATE OF TENNESSEE
DEPARTMENT OF TRANSPORTATION

ENVIRONMENTAL NOTES

31-JUL-2024 10:06
\\tdot01nas002.tdot.state.tn.us\01Shared\SURVDES\Design\PROJECTS\Unicoi SR 107\002E.sht

TYPE	YEAR	PROJECT NO.	SHEET NO.
R.O.W.	2020	BR-STP-107(28)	2E
PS&E	2024	BR-STP-107(28)	2F

REV. 02/23/22: UPDATED THE STORM DRAINAGE PIPES, CATCH BASINS, AND RIGHT OF WAY MARKERS TABULATION BLOCKS.

MANHOLES

SHEET NO.	LOCATION	STATION	OFFSET (FT.)	DRAINAGE CODE	GRATE/ TOP ELEV.	INVERT ELEV.	DEPTH (FT.)	INSIDE DIM.	STANDARD DRAWING NO.	PAY ITEMS TYPE 3 611-01.02 > 4'-8'
4B	S.R. 107 (UNICOI DRIVE)	212+00.39	35.72	14	1924.27	1916.68	7.59	6' DIAM.	D-MH-2	1
TOTALS										1

STORM DRAINAGE PIPES

SHEET NO.	INLET CODE NO.	INLET OUTLET ELEV.	OUTLET CODE NO.	OUTLET INLET ELEV.	% GRADE	REINFORCED CONCRETE PIPE - CLASS, ITEM NO., SIZE & LENGTH (FT.) CLASS III 607-03.02 18"	CLASS III 607-05.02 24"	CLASS III 607-06.02 30"
4B	1	1929.37	2	1924.94	3.50%	127'		
4B	2	1924.77	3	1923.52	3.00%	42'		
4B	4	1923.89	3	1923.46	5.00%	9'		
4B	3	1922.87	5	1922.77	0.50%	20'		
4B	5	1922.44	6	1921.01	2.50%	58'		
4B	6	1920.84	8	1920.74	0.70%	14'		
4B	7	1920.81	8	1920.74	1.00%	7'		
4B	8	1920.41	9	1919.79	0.60%	102'		
4B	9	1919.29	10	1919.09	0.50%		41'	
4B	11	1920.25	12	1919.43	2.00%	41'		
4B	13	1920.25	12	1919.43	2.00%	41'		
4B	12	1919.10	10	1918.90	0.50%	39'		
4B	16	1920.25	10	1919.22	2.50%	41'		
4B	10	1918.57	14	1918.51	0.50%		13'	
4B	14	1916.68	15	1916.29	0.50%			78'
TOTALS						541'	54'	78'

STORM DRAIN ENDWALLS

LOCATION \ SHEET NO.	STATION	OFFSET (FT.)	SKEW	CODE	TYPE	STANDARD DRAWING NO.	PROTECTED ENDWALLS CLASS "A" CONCRETE 611-07.01 (C.Y.)	PROTECTED ENDWALLS STEEL BAR REINFORCING 611-07.02 (LB.)
S.R. 107 (UNICOI DRIVE)	211+20.00	35	180°	15.0	STRAIGHT	D-PE-4	2	93
TOTALS							2.0	93

DROP INLET CATCH BASINS

SHEET NO.	LOCATION	STATION	OFFSET (FT.)	DRAINAGE CODE	GRATE ELEV.	INVERT ELEV.	DEPTH (FT.)	INSIDE DIM.	STANDARD DRAWING NO.	PAY ITEMS TYPE 42 611-42.01 0' - 4'
4B	S.R. 173 (ERWIN HWY)	216+29.91	20.60 (RT)	1	1932.31	1929.37	2.94	32"X32"	D-CB-42S	1
TOTALS										1

CATCH BASINS

SHEET NO.	LOCATION	STATION	OFFSET (FT.)	DRAINAGE CODE	GRATE ELEV.	INVERT ELEV.	DEPTH (FT.)	INSIDE DIM.	STANDARD DRAWING NO.	PAY ITEMS TYPE 12 611-12.01 0'-4'	TYPE 12 611-12.02 >4'-8'	TYPE 14 611-14.02 >4'-8'	TYPE 25 611-25.01 0'-4'	TYPE 25 611-25.02 >4'-8'
4B	S.R. 173 (ERWIN HWY)	215+00.00	22.00 (RT)	2	1929.06	1924.77	4.29	4'X3'	D-CB-12P		1			
4B	S.R. 107	300+36.00	36.04 (LT)	3	1927.49	1922.87	4.62	8'X3'	D-CB-14P			1		
4B	S.R. 107	300+40.40	44.71 (LT)	4	1927.79	1923.89	3.9	4'X4'	D-CB-25SB				1	
4B	S.R. 107	300+55.00	21.47 (LT)	5	1927.3	1922.44	4.86	8'X3'	D-CB-14P			1		
4B	S.R. 107	300+55.00	40.09 (RT)	6	1925.32	1920.84	4.48	4'X4'	D-CB-12SB		1			
4B	S.R. 107	300+53.57	59.19 (RT)	7	1925.16	1920.81	4.35	4'X4'	D-CB-25SB					1
4B	S.R. 107	300+35.00	55.23 (RT)	8	1924.82	1920.41	4.41	8' DIAM.	D-CB-14RB			1		
4B	S.R. 107 (UNICOI DR.)	212+58.00	22.00 (RT)	9	1924.15	1919.29	4.86	4'X3'	D-CB-12P		1			
4B	S.R. 107 (UNICOI DR.)	212+11.00	22.00 (RT)	10	1924.02	1918.57	5.45	8' DIAM.	D-CB-14RB			1		
4B	S.R. 107 (UNICOI DR.)	212+58.00	22.00 (LT)	11	1924.15	1920.25	3.9	4'X3'	D-CB-12P	1				
4B	S.R. 107 (UNICOI DR.)	212+11.00	22.00 (LT)	12	1924.02	1919.1	4.92	8'X3'	D-CB-14P			1		
4B	S.R. 107 (UNICOI DR.)	211+64.00	22.00 (LT)	13	1924.15	1920.25	3.9	4'X3'	D-CB-12P	1				
4B	S.R. 107 (UNICOI DR.)	211+64.00	22.00 (RT)	16	1924.15	1920.25	3.9	4'X3'	D-CB-12P	1				
TOTALS										3	3	5	1	1

SEALED BY

JAMES B. MORGAN
REGISTERED ENGINEER
DEPT. OF AGRICULTURE
COMMERCE
No. 111658
STATE OF TENNESSEE

07/31/2024

STATE OF TENNESSEE
DEPARTMENT OF TRANSPORTATION

TABULATED QUANTITIES

SHEET 1 OF 2

31-JUL-2024 10:07
\\tdot01nas002.tdot.state.tn.us\01Shared\SURVDES\Design\PROJECTS\Unicoi SR 107\002F.SHT

TYPE	YEAR	PROJECT NO.	SHEET NO.
PS&E	2024	BR-STP-107(28)	2F1

PAVEMENT QUANTITIES

LOCATION (ROADWAY)	TYPE - GRADE - PAY ITEM (TON)						
	MINERAL AGG.	BITUMINOUS PLANT MIX BASE (HOT MIX) PG-64-22		PRIME	TACK	ASPHALTIC CONCRETE SURFACE (HOT MIX) PG-64-22	
	D	A	B-M2	COAT	COAT	D	E
	303-01	307-01.01	307-01.08	402-01	403-01	411-01.10	411-01.07
S.R. 107 (UNICOI DR.)/S.R. 173 (ERWIN HWY)	1525.0	372.0	244.0	3.0	1.5	164.0	20.0
S.R. 107	478.0	140.0	93.0	1.0	0.8	74.0	
DRIVEWAYS	235.0		55.0	1.0	0.2	40.0	
TOTALS	2238.0	512.0	392.0	5.0	2.5	278.0	20.0

RIGHT OF WAY MARKERS

SHEET NO.	Item #: 708-02.01 QUANTITIES			
	"A"	"B"	"C"	TOTALS
4	9		1	10
TOTALS	9		1	10

SPECIAL DITCHES

ROADWAY	STATION FROM	STATION TO	SIDE	DETAIL NO.	CONFIGURATION FORE (H/V)	CONFIGURATION BOTTOM WIDTH (FT.)	CONFIGURATION BACK (H/V)	RIP RAP CLASS B 709-05.08 (TONS)	RIP RAP CLASS C 709-05.09 (TONS)	SODDING NEW SOD 803-01 (S.Y.)
S.R. 107 (UNICOI DR.)	209+75	210+15	LT	1	2:1	0	2:1			18
S.R. 107 (UNICOI DR.)	210+15	210+58.65	LT	2	2:1	0	2:1	28		
S.R. 107 (UNICOI DR.)	210+91.42	211+20.00	RT	3	4:1	4	4:1		78	
TOTALS								28	78	18

PROPOSED GUARDRAIL

SHEET NO.	LOCATION	SIDE LT	SIDE RT	STATIONS FROM	STATIONS TO	GUARDRAIL THRIE BEAM BRIDGE TRAN. MASH TL-3 (20.65') 705-06.25 EACH	GUARDRAIL W BEAM GR (TYPE 2) MASH TL3 705-06.01 (L.F.)	GUARDRAIL RADIUS RAIL 706-06.03 (L.F.)	TERMINAL ANCHORS ROUNDED END ELEMENT 706-10.26 EACH	TERMINAL ANCHORS IN-LINE MASH TI-3 705-06.11 EACH	TERMINAL ANCHORS TYPE 38 MASH TL3 (46.875') 705-06.20 (EACH)	REMARKS
4B	S.R. 107 (UNICOI DR.)	X		209+41.98	210+09.50	1					1	
4B	S.R. 107 (UNICOI DR.)		X	208+53.69	210+09.50	1	112.5	37.5	1	1		
4B	S.R. 107 (UNICOI DR.)	X		211+50.50	212+18.03	1					1	
4B	S.R. 107 (UNICOI DR.)		X	211+50.50	212+18.03	1					1	
TOTALS						4	113	38	1	1	3	

ESTIMATED GRADING QUANTITIES

DESCRIPTION	UNADJUSTED VOLUMES (CY) EXC.	UNADJUSTED VOLUMES (CY) EMB.	ADJUSTED VOLUMES (CY) EXC.
MAINLINE	1432	689	1361
SIDE ROADS	286	28	272
PVT. DRIVES, BUSINESS AND FIELD ENTRANCES	29	42	28
INDEPENDENT DITCHES	44	1	42
TEMPORARY CONSTRUCTION EXITS	7	0	7
HAUL ROAD	7	10	7
TOPSOIL (EMB.)	71		
TOPSOIL (EXC.)	34		
TOPSOIL TOTALS (SEE TOPSOIL TABLE)			

ROCK (C.Y.) EXC.	ROCK (C.Y.) EMB.
0	297

TOTALS (C.Y.) EXC. (UNCL.)	EMB. (UNCL.)	EXC (COMMON)	EXC. (AVAIL.)	EXC. (ADJ.)
1910	473	1910	1805	1715

BALANCE SUMMARY

SHRINK = 5 % SWELL = 5 %

EXC.		EMB.
1715	VS.	-473

AVAILABLE	=	1242
WASTE MATERIAL	=	1305
BORROW ROCK	=	312

TOPSOIL

IF EXISTING TOPSOIL IS SUITABLE FOR REUSE

PROPOSED SLOPE AREA S.F.	EXISTING TOPSOIL (EXC.)	EXISTING TOPSOIL (EMB.)	EXISTING TOPSOIL (TOTAL) C.Y.	REQUIRED TOPSOIL C.Y.	PLACING TOPSOIL 203-04 C.Y.	FURNISHED TOPSOIL 203-07 C.Y.	EXCESS TOPSOIL C.Y.
8168	34	71	105	151	105	46	0

SEALED BY

JAMES B. MORGAN
REGISTERED ENGINEER
DEPARTMENT OF AGRICULTURE
COMMERCE
111658
STATE OF TENNESSEE

07/31/2024

STATE OF TENNESSEE
DEPARTMENT OF TRANSPORTATION

TABULATED QUANTITIES

SHEET 2 OF 2

31-JUL-2024 10:08
\\tdot01nas002.tdot.state.tn.us\01Shared\SURVDES\Design\PROJECTS\Unicoi SR 107\002F1.SHT

TYPE	YEAR	PROJECT NO.	SHEET NO.
PS&E	2024	BR-STP-107(28)	3

RIGHT-OF-WAY

(1) IT IS INTENDED THAT ALL BUILDINGS AND/OR PORTIONS OF BUILDINGS THAT ARE WITHIN THE PROPOSED RIGHT-OF-WAY AND/OR EASEMENT LINES FOR THE PROJECT BE REMOVED THERE FROM IN THE PROCESS OF RIGHT-OF-WAY ACQUISITION. IF ANY SUCH BUILDINGS OR IMPROVEMENTS ARE NOT REMOVED IN THE COURSE OF RIGHT-OF-WAY ACQUISITION, THE CIVIL ENGINEERING MANAGER 2, PROJECT DEVELOPMENT DIVISION AND THE CIVIL ENGINEERING MANAGER 1, REGIONAL PROJECT DEVELOPMENT OFFICE, ARE TO BE NOTIFIED IN SUFFICIENT TIME TO PERMIT HAVING SUCH REMOVALS DESIGNATED AS A PART OF THE CONSTRUCTION CONTRACT.

(2) EXISTING PAVED DRIVEWAY PER TRACT REMAINDER WILL BE REPLACED IN KIND TO A TOUCHDOWN POINT.

(3) WHERE THE EXISTING DRIVEWAY IS UNPAVED AND THE PROPOSED DRIVEWAY EXCEEDS 7 PERCENT IN GRADE, EACH DRIVEWAY WILL BE PAVED TO A TOUCHDOWN POINT OR UNTIL THE GRADE IS LESS THAN 7 PERCENT.

(4) WHERE THE EXISTING DRIVEWAY IS UNPAVED AND THE PROPOSED DRIVEWAY IS LESS THAN 7 PERCENT IN GRADE, EACH DRIVEWAY WILL BE PAVED A SHOULDER WIDTH FROM THE EDGE OF PAVEMENT AND THE REMAINDER OF THAT DRIVEWAY REPLACED IN KIND TO A TOUCHDOWN POINT.

(5) ANY NECESSARY PAVING OF DRIVEWAYS WILL BE DONE DURING PAVING OPERATIONS ON THE MAIN ROADWAY.

(6) NEW DRIVEWAYS PROVIDED IN THE PLANS WILL BE PAVED BASED ON THE 7 PERCENT CRITERIA. THOSE 7 PERCENT OR STEEPER IN GRADE WILL BE PAVED AND THOSE FLATTER THAN 7 PERCENT WILL BE COVERED WITH BASE STONE.

(7) ON PROJECTS WITHOUT CURB AND GUTTER THAT ARE ON STATE ROUTES, IT WILL BE THE RESPONSIBILITY OF THE OWNER TO SECURE A PERMIT AND TO CONSTRUCT ADDITIONAL DRIVEWAYS AND FIELD ENTRANCES OTHER THAN THOSE PROVIDED IN THE PLANS.

(8) ON PROJECTS WITH CURB AND GUTTER THAT ARE ON STATE ROUTES, IT WILL BE THE RESPONSIBILITY OF THE OWNER TO SECURE A PERMIT. AFTER THE PERMIT HAS BEEN GRANTED, THE DEPARTMENT WILL CONSTRUCT THE DRIVEWAY OR FIELD ENTRANCE THROUGH THE CURB AND SIDEWALK, PROVIDED THE CURB AND SIDEWALK HAVE NOT BEEN CONSTRUCTED. IT WILL BE THE RESPONSIBILITY OF THE PROPERTY OWNER TO CONSTRUCT THE DRIVEWAY OR FIELD ENTRANCE FROM BACK OF SIDEWALK TO TOUCHDOWN POINT FOR ANY ADDITIONAL DRIVEWAYS OR FIELD ENTRANCES OTHER THAN THOSE PROVIDED IN THE PLANS.

UTILITY

(1) THE LOCATIONS OF UTILITIES SHOWN WITHIN THESE PLANS ARE APPROXIMATE ONLY. THE SURVEYOR HAS NOT PHYSICALLY LOCATED THE UNDERGROUND UTILITIES. ABOVE GRADE AND UNDERGROUND UTILITIES SHOWN WERE TAKEN FROM VISIBLE APPURTENANCES AT THE SITE, PUBLIC RECORDS, AND/OR MAPS PREPARED BY OTHERS. THEREFORE, RELIANCE UPON THE TYPE, SIZE, AND LOCATION OF UTILITIES SHOWN SHOULD BE DONE SO WITH THIS CIRCUMSTANCE CONSIDERED. DETAILED VERIFICATION OF EXISTENCE, LOCATION, AND DEPTH SHOULD ALSO BE MADE PRIOR TO ANY DECISION RELATIVE THERETO IS MADE. AVAILABILITY AND COST OF SERVICE SHOULD BE CONFIRMED WITH THE APPROPRIATE UTILITY COMPANY. IN TENNESSEE, IT IS A REQUIREMENT, PER "THE UNDERGROUND UTILITY DAMAGE PREVENTION ACT", THAT ANYONE WHO ENGAGES IN EXCAVATION MUST NOTIFY ALL KNOWN UNDERGROUND UTILITY OWNERS, NO LESS THAN THREE (3) OR NOT MORE THAN TEN (10) WORKING DAYS PRIOR TO THE DATE OF THEIR INTENT TO EXCAVATE AND ALSO TO AVOID ANY POSSIBLE HAZARD OR CONFLICT. NOTIFICATION BY CALLING THE TENNESSEE ONE CALL SYSTEM, INC., AT 1-800-351-1111 AS REQUIRED BY TCA 65-31-106 WILL BE REQUIRED.

(2) UNLESS OTHERWISE NOTED, ALL UTILITY ADJUSTMENTS WILL BE PERFORMED BY THE UTILITY OR ITS REPRESENTATIVE. THE CONTRACTOR AND UTILITY OWNERS WILL BE REQUIRED TO COOPERATE WITH EACH OTHER IN ORDER TO EXPEDITE THE WORK REQUIRED BY THIS CONTRACT. ON CONTRACTS WHERE CONSTRUCTION STAKES, LINES, AND GRADES ARE CONTRACT ITEMS, THE CONTRACTOR WILL BE REQUIRED TO PROVIDE RIGHT-OF-WAY OR SLOPE STAKES, DITCH OR STREAM BED GRADES, OR OTHER ESSENTIAL SURVEY STAKING TO PREVENT CONFLICTS WITH THE HIGHWAY CONSTRUCTION. FREQUENTLY, THIS WILL BE REQUIRED AS THE FIRST ITEM OF WORK AND AT ANY LOCATION ON THE PROJECT DIRECTED BY THE ENGINEER.

(3) THE CONTRACTOR WILL PROVIDE ALL NECESSARY PROTECTIVE MEASURES TO SAFEGUARD EXISTING UTILITIES FROM DAMAGE DURING CONSTRUCTION OF THIS PROJECT. IN THE EVENT THAT SPECIAL EQUIPMENT IS REQUIRED TO WORK OVER AND AROUND THE UTILITIES, THE CONTRACTOR WILL BE REQUIRED TO FURNISH SUCH EQUIPMENT. THE COST OF PROTECTING UTILITIES FROM DAMAGE AND FURNISHING SPECIAL EQUIPMENT WILL BE INCLUDED IN THE PRICE BID FOR OTHER ITEMS OF CONSTRUCTION.

(4) PRIOR TO SUBMITTING HIS BID, THE CONTRACTOR WILL BE SOLELY RESPONSIBLE FOR CONTACTING OWNERS OF ALL AFFECTED UTILITIES IN ORDER TO DETERMINE THE EXTENT TO WHICH UTILITY RELOCATIONS AND/OR ADJUSTMENTS WILL HAVE UPON THE SCHEDULE OF WORK FOR THE PROJECT. WHILE SOME WORK MAY BE REQUIRED 'AROUND' UTILITY FACILITIES THAT WILL REMAIN IN PLACE, OTHER UTILITY FACILITIES MAY NEED TO BE ADJUSTED CONCURRENTLY WITH THE CONTRACTOR'S OPERATIONS. ADVANCE CLEAR CUTTING MAY BE REQUIRED BY THE ENGINEER AT ANY LOCATION WHERE CLEARING IS CALLED FOR IN THE SPECIFICATIONS AND CLEAR CUTTING IS NECESSARY FOR A UTILITY RELOCATION. ANY ADDITIONAL COST WILL BE INCLUDED IN THE UNIT PRICE BID FOR THE CLEARING ITEM SPECIFIED IN THE PLANS.

(5) THE CONTRACTOR SHALL NOTIFY EACH INDIVIDUAL UTILITY OWNER OF HIS PLAN OF OPERATION IN THE AREA OF THE UTILITIES. PRIOR TO COMMENCING WORK, THE CONTRACTOR SHALL CONTACT THE UTILITY OWNERS AND REQUEST THEM TO PROPERLY LOCATE THEIR RESPECTIVE UTILITY ON THE GROUND. THIS NOTIFICATION SHALL BE GIVEN AT LEAST THREE (3) BUSINESS DAYS PRIOR TO COMMENCEMENT OF OPERATIONS AROUND THE UTILITY IN ACCORDANCE WITH TCA 65-31-106 NOTIFICATION BY CALLING THE TENNESSEE ONE CALL SYSTEM, INC AT 1-800-351-1111 WILL BE REQUIRED.

UTILITY OWNERS

CABLE:

XFINITY (COMCAST)
1794 OLD GRAY STATION RD.
JOHNSON CITY, TN 37615
CONTACT: KEVIN WALDROP
OFFICE PHONE: 865 862 5061
CELL PHONE: 423 791 4128
Email: kevin_waldrop2@cable.comcast.com

ELECTRIC:

ERWIN UTILITIES
P.O. BOX 817
244 LOVE STREET
ERWIN, TN 37650
CONTACT: KIP LEMMON
OFFICE PHONE: 423 743 1408

Email: klemmon@e-u.cc

GAS:

UNICOI COUNTY GAS UTILITY DISTRICT
1414 N MAIN AVENUE
P.O. BOX 599
ERWIN, TN 37650-0599
CONTACT: TIM WHITSON
MARK LAFEVER
OFFICE PHONE: 423 743 6793
CELL PHONE: 423 388 0055
423 330 7455
Email: twhitson@ucgud.com
mlafever@ucgud.com

TELEPHONE:

CENTURYLINK
101 NORTH ROAN STREET
JOHNSON CITY, TN 37601
CONTACT: ANDREW ICE
OFFICE PHONE: 423 461 7724
CELL PHONE: 423 470 5636
Email: Andrew.F.Ice@brightspeed.com

WATER:

UNICOI WATER UTILITY DISTRICT

P.O. BOX 8
304 TENNESSEE STREET
UNICOI, TN 37692
CONTACT: TOM BRYANT
OFFICE PHONE: 423 743 6202
CELL PHONE: 423 388 8771
Email: Tom.bryant@unicoiwater.com

WATER:

CITY OF JOHNSON CITY WATER & SEWER SERVICES DEPT.
P.O. BOX 2150 (37605)
601 E MAIN STREET
JOHNSON CITY, TN 37601
CONTACT: JON LANE
OFFICE PHONE: 423 975 2629

Email: jlane@johnsoncitytn.org

SEALED BY

07/31/2024

STATE OF TENNESSEE
DEPARTMENT OF TRANSPORTATION

RIGHT-OF-WAY NOTES,
UTILITY NOTES
AND
UTILITY OWNERS

31-JUL-2024 10:08
\\tdot01nas002.tdot.state.tn.us\01Shared\SURVDES\Design\PROJECTS\Unicoi SR 107\003.sht

TYPE	YEAR	PROJECT NO.	SHEET NO.
R.O.W.	2020	BR-STP-107(28)	3
PS&E	2024	BR-STP-107(28)	3A

REV. 07/27/21: MODIFIED CONSTRUCTION EASEMENT AREA IN R.O.W. ACQUISITION TABLE ON TRACT 8.

REV. 02/23/22: MODIFIED AREA TO BE ACQUIRED AND CONSTRUCTION EASEMENT AREA IN R.O.W. ACQUISITION TABLE ON TRACT 6.

*TO PROVIDE WORKING ROOM FOR CONSTRUCTION AND EPSC MEASURES

R.O.W. ACQUISITION TABLE

TRACT NO.	PROPERTY OWNERS	COUNTY RECORDS				TOTAL AREA (ACRES)			AREA TO BE ACQUIRED (ACRES)			AREA REMAINING (ACRES)		EASEMENT (ACRES)			
		TAX MAP NO.	PARCEL NO.	DEED DOCUMENT REFERENCE		LEFT	RIGHT	TOTAL	LEFT	RIGHT	TOTAL	LEFT	RIGHT	PERMANENT	SLOPE	CONSTRUCTION *	AIR RIGHTS
				BOOK	PAGE												
1	BOBY JACK STREET AND WIFE, JIMMIE STREET	12	83	82	576		1.350	1.350					1.350				
2	MATTHEW BENNETT AND SHARI DAVIDSON	12L	B9	405	882	1.200		1.200				1.200					
3	GARNIE L. PETERSON	12L	B10	426	587	0.102		0.102				0.102					
4	VIRGINIA BOWMAN HUNTER HEIRS	12	61	95	246		140.872	140.872		672 S.F.	672 S.F.		140.857			2259 S.F.	
5	GARNIE PETERSON	12L	B9.02	374	386	1.500		1.500				1.500					
6	CARL W. JONES AND WIFE, SUE JONES	12L	B9.03	403	248	1.303		1.303	4112 S.F.		4112 S.F.	1.209				4214 S.F.	
7	LINDA PLEMONS AND HUSBAND, DON PLEMONS	12E	F18	187	808	2049 S.F.		2049 S.F.	1174 S.F.		1174 S.F.	875 S.F.				436 S.F.	
8	LINDA PLEMONS AND HUSBAND, DON PLEMONS	12E	F9	187	808		0.764	0.764		524 S.F.	524 S.F.		0.752			603 S.F.	
9	TOWN OF UNICOI	12E	F10.01	194	737	844 S.F.		844 S.F.				844 S.F.					
10	TOWN OF UNICOI	12E	F10.01	194	734		0.487	0.487					0.487			654 S.F.	
11	M. D. COLLINS AND WIFE, BILLIE COLLINS	12E	F18	NOT	FOUND	0.211		0.211	373 S.F.		373 S.F.	0.202				966 S.F.	
12	M. D. COLLINS AND WIFE, BILLIE COLLINS	12E	F17	93	353	0.240		0.240				0.240					
13	FRED D. LYLE, IV	12E	F16	420	879	0.284		0.284				0.284					
14	UNAKA PROFESSIONAL SERVICES, LLC	12E	F12	383	947		0.349	0.349					0.349				
15	GUY R. WILSON AND WIFE, DORIS WILSON	12E	F15	86	89	0.424		0.424				0.424					
				86	90												

DISTURBED AREA	
IN BETWEEN SLOPE LINES	1.386
15-FEET WIDE STRIP (OUTSIDE OF SLOPE LINES)	0.591
TOTAL DISTURBED AREA	1.977
TOTAL PROJECT AREA	2.193

SEALED BY

JAMES B. MORGAN
REGISTERED ENGINEER
DEPARTMENT OF AGRICULTURE
DEPARTMENT OF COMMERCE
No. 111668
STATE OF TENNESSEE

07/31/2024

STATE OF TENNESSEE
DEPARTMENT OF TRANSPORTATION

RIGHT-OF-WAY ACQUISITION TABLE

31-JUL-2024 10:09
\\tdot01nas002.tdot.state.tn.us\01Shared\SURVDES\Design\PROJECTS\Unicoi SR 107\003A.sht

TYPE	YEAR	PROJECT NO.	SHEET NO.
R.O.W.	2020	BR-STP-107(28)	3A
PS&E	2024	BR-STP-107(28)	3B

REV. 07/27/21: MODIFIED CONSTRUCTION EASEMENT ON TRACT 8.

REV. 02/23/22: MODIFIED CONSTRUCTION EASEMENT AND R.O.W. LINES ON TRACT 6.

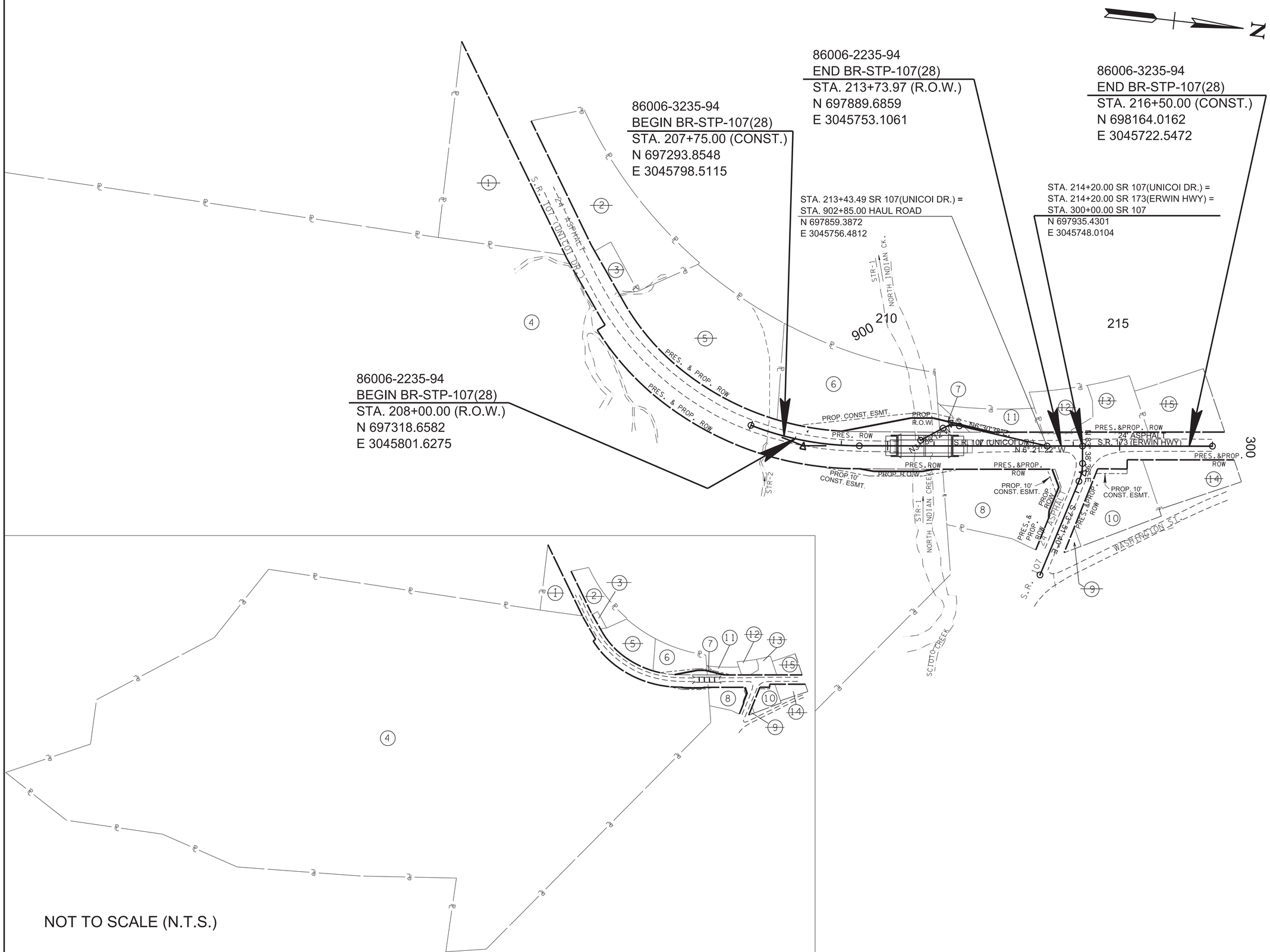

NOT TO SCALE (N.T.S.)

SEALED BY

07/31/2024

COORDINATES ARE NAD 83(1995), ARE DATUM ADJUSTED BY THE FACTOR OF 1.00012 AND TIED TO THE TGRN. ALL ELEVATIONS ARE REFERENCED TO THE NAVD 1988 WITH GEOID 12B.

STATE OF TENNESSEE
DEPARTMENT OF TRANSPORTATION

PROPERTY MAP

SCALE: 1"=100'

31-JUL-2024 10:10
\\tdot01nas002.tdot.state.tn.us\01Shared\SURVDES\Design\PROJECTS\Unicoi SR 107\003B.sht

CURVE S.R. 107 (UNICOI DR.)
PI 208+20.94
N 697,337.2764
E 3,045,814.6414
Δ 21° 19' 08" (LT)
D 8° 55' 00"
R 642.57
L 239.09
T 120.94
SE 0.089 FT/FT

CURVE SR107
PI 300+57.46
N 697,941.7923
E 3,045,805.1195
Δ 22° 29' 44" (RT)
D 45° 00' 00"
R 127.32
L 49.99
T 25.32
SE 0.040 FT/FT

CURVE HAUL ROAD
PI 900+73.86
N 697,647.9562
E 3,045,732.3525
Δ 41° 26' 50" (RT)
D 114° 35' 30"
R 50.00
L 36.17
T 18.92
PT 900+91.11
PC 900+54.95

CONTROL POINTS TABLE

POINT	NORTH	EAST	ELEVATION	DESCRIPTION	STATION	OFFSET
S12	697286.583	3045814.649	1926.164	86-107-12	207+70.25	17.0341
S13	698083.956	3045757.753	1930.878	86-107-13	215+66.53	26.1259

TYPE	YEAR	PROJECT NO.	SHEET NO.
R.O.W.	2020	BR-STP-107(28)	4
PS&E	2024	BR-STP-107(28)	4

REV. 07/27/21: MODIFIED CONSTRUCTION EASEMENT ON TRACT 8.

REV. 02/23/22: MODIFIED CONSTRUCTION EASEMENT AND R.O.W. LINES ON TRACT 6. UPDATED SLOPE LINES ON SOUTH SIDE OF PROPOSED BRIDGE ON TRACT 4 AND ALONG S.R. 107 ON TRACT 10. UPDATED R.O.W. MARKERS.

N

MATTHEW BENNETT AND SHARI DAVIDSON
2

STA. 213+43.49 SR 107(UNICOI DR.) =
STA. 902+85.00 HAUL ROAD
N 697859.3872
E 3045756.4812

86006-2235-94
END PROJ. BR-STP-107(28)
STA. 213+73.97 (R.O.W.)
N 697889.6859
E 3045753.1061

STA. 214+20.00 SR 107(UNICOI DR.) =
STA. 214+20.00 SR 173(ERWIN HWY) =
STA. 300+00.00 SR 107
N 697935.4301
E 3045748.0104

86006-3235-94
END PROJ. BR-STP-107(28)
STA. 216+50.00 (CONST.)
N 698164.0162
E 3045722.5472

86006-2235-94
BEGIN PROJ. BR-STP-107(28)
STA. 208+00.00 (R.O.W.)
N 697318.6582
E 3045801.6275

GARNIE PETERSON
5

M. D. COLLINS AND WIFE, BILLIE COLLINS
11

M. D. COLLINS AND WIFE, BILLIE COLLINS
12

FRED D. LYLE, IV
13
215

GUY R. WILSON AND WIFE, DORIS WILSON
15

CARL W. JONES AND WIFE, SUE JONES
6

LINDA PLEMONS AND HUSBAND, DON PLEMONS
7

VIRGINIA BOWMAN HUNTER HEIRS
4

LINDA PLEMONS AND HUSBAND, DON PLEMONS
8

TOWN OF UNICOI
9

TOWN OF UNICOI
10

UNAKA PROFESSIONAL SERVICES, LLC
14

86006-3235-94
BEGIN PROJ. BR-STP-107(28)
STA. 207+75.00 (CONST.)
N 697293.8548
E 3045798.5115

EXIST. 5-SPAN, 166' X 35', CONC. GIRDER BRIDGE TO BE REMOVED.
BRIDGE ID #86SR107007

EXISTING SIGNS LABELED TO BE REMOVED ARE TO BE RETURNED TO THE CITY.

T.B.R. = TO BE REMOVED

AREA TO BE SCARIFIED AND SODDED

NOTE: R.O.W. MARKERS TO BE INSTALLED FLUSH TO THE GROUND.

SEALED BY

JAMES B. MORGAN
REGISTERED ENGINEER
AGRICULTURE
COMMERCE
No. 111658
STATE OF TENNESSEE

07/31/2024

COORDINATES ARE NAD 83(1995), ARE DATUM ADJUSTED BY THE FACTOR OF 1.00012 AND TIED TO THE TGRN. ALL ELEVATIONS ARE REFERENCED TO THE NAVD 1988 WITH GEOID 12B.

STATE OF TENNESSEE
DEPARTMENT OF TRANSPORTATION

PRESENT LAYOUT

STA. 207+75 TO STA. 216+50
SCALE: 1"= 50'

31-JUL-2024 10:10
\\tdot01nas002.tdot.state.tn.us\01Shared\SURVDES\Design\PROJECTS\Unicoi SR 107\004.sht

CURVE HAUL ROAD
PI 900+73.86
N 697,647.9562
E 3,045,732.3525
Δ 41° 26' 50" (RT)
D 114° 35' 30"
R 50.00
L 36.17
T 18.92
PT 900+91.11
PC 900+54.95

CONTROL POINTS TABLE						
POINT	NORTH	EAST	ELEVATION	DESCRIPTION	STATION	OFFSET
S12	697286.583	3045814.649	1926.164	86-107-12	207+70.25	17.0341
S13	698083.956	3045757.753	1930.878	86-107-13	215+66.53	26.1259

TYPE	YEAR	PROJECT NO.	SHEET NO.
R.O.W.	2020	BR-STP-107(28)	4A
PS&E	2024	BR-STP-107(28)	4A

REV. 07/27/21: MODIFIED CONSTRUCTION EASEMENT ON TRACT 8.

REV. 02/23/22: MODIFIED CONSTRUCTION EASEMENT, R.O.W. LINES, BEARING & DISTANCE LABELS, AND STATION & OFFSET LABELS ON TRACT 6. UPDATED SLOPE LINES ON SOUTH SIDE OF PROPOSED BRIDGE ON TRACT 4 AND ALONG S.R. 107 ON TRACT 10. UPDATED R.O.W. MARKERS.

N

MATTHEW BENNETT AND SHARI DAVIDSON
2

GARNIE PETERSON
5

CARL W. JONES AND WIFE, SUE JONES
6

M. D. COLLINS AND WIFE, BILLIE COLLINS
11

M. D. COLLINS AND WIFE, BILLIE COLLINS
12

FRED D. LYLE, IV
13

215

GUY R. WILSON AND WIFE, DORIS WILSON
15

LINDA PLEMONS AND HUSBAND, DON PLEMONS
7

VIRGINIA BOWMAN HUNTER HEIRS
4

LINDA PLEMONS AND HUSBAND, DON PLEMONS
8

TOWN OF UNICOI
9

TOWN OF UNICOI
10

UNAKA PROFESSIONAL SERVICES, LLC
14

900
210
300

86006-2235-94
BEGIN PROJ. BR-STP-107(28)
STA. 208+00.00 (R.O.W.)
N 697318.6582
E 3045801.6275

86006-3235-94
BEGIN PROJ. BR-STP-107(28)
STA. 207+75.00 (CONST.)
N 697293.8548
E 3045798.5115

STA. 213+43.49 SR 107(UNICOI DR.) =
STA. 902+85.00 HAUL ROAD
N 697859.3872
E 3045756.4812

86006-2235-94
END PROJ. BR-STP-107(28)
STA. 213+73.97 (R.O.W.)
N 697889.6859
E 3045753.1061

STA. 214+20.00 SR 107(UNICOI DR.) =
STA. 214+20.00 SR 173(ERWIN HWY) =
STA. 300+00.00 SR 107
N 697935.4301
E 3045748.0104

86006-3235-94
END PROJ. BR-STP-107(28)
STA. 216+50.00 (CONST.)
N 698164.0162
E 3045722.5472

HAUL ROAD
STA. 900+00.00
N 697587.4053
E 3045774.6510

S.R. 107 (UNICOI DRIVE)
STA. 207+00.00
N 697220.4333
E 3045783.4148

S.R. 173 (ERWIN HWY)
STA. 217+00.00
N 698213.7089
E 3045717.0117

CP-S12
86-107-12

CP-S13
86-107-13

DRILL HOLE

SR 107
STA. 303+00.00
N 697874.1935
E 3046038.7268

LINE TABLE		
LINE	DIRECTION	DISTANCE
LINE SL17	N 5° 58' 27" W	63.44'
LINE SL18	S 84° 1' 33" W	20.00'
LINE SL19	N 5° 58' 47" W	32.99'
LINE SL33	S 64° 59' 28" W	4.60'
LINE SL34	N 37° 24' 58" W	54.21'
LINE SL35	S 82° 15' 28" W	35.10'
LINE SL36	S 64° 59' 28" W	35.36'
LINE SL55	N 63° 48' 9" E	43.34'

SEALED BY

JAMES B. MORGAN
REGISTERED ENGINEER
AGRICULTURE
COMMERCE
11168
STATE OF TENNESSEE

07/31/2024

COORDINATES ARE NAD 83(1995), ARE DATUM ADJUSTED BY THE FACTOR OF 1.00012 AND TIED TO THE TGRN. ALL ELEVATIONS ARE REFERENCED TO THE NAVD 1988 WITH GEOID 12B.

STATE OF TENNESSEE
DEPARTMENT OF TRANSPORTATION

RIGHT OF WAY DETAILS

STA. 207+75 TO STA. 216+50
SCALE: 1"= 50'

31-JUL-2024 10:10
\\tdot01nas002.tdot.state.tn.us\01Shared\SURVDES\Design\PROJECTS\Unicoi SR 107\004A.sht

TYPE	YEAR	PROJECT NO.	SHEET NO.
R.O.W.	2020	BR-STP-107(28)	4B
PS&E	2024	BR-STP-107(28)	4B

REV. 02/23/22: MODIFIED RIP-RAP ON SOUTH SIDE OF PROPOSED BRIDGE. UPDATED PROPOSED PIPES, CATCH BASIN LOCATIONS, TYPES, AND STRUCTURE INFORMATION FOR NOS. 3, 5, 6, 7, 8, 9, & 10. UPDATED GRADED SOLID ROCK PAD LIMITS.

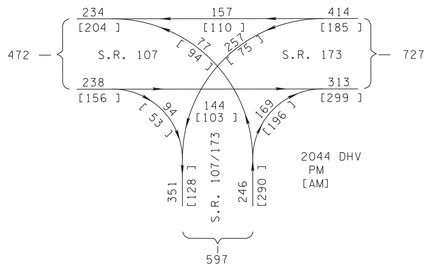

CURVE HAUL ROAD
PI 900+73.86
N 697,647.9562
E 3,045,732.3525
Δ 41° 26' 50" (RT)
D 114° 35' 30"
R 50.00
L 36.17
T 18.92
PT 900+91.11
PC 900+54.95

NOTE: THE CONTRACTOR SHALL USE ANY MEASURES NECESSARY TO ENSURE THAT NO CONSTRUCTION ACTIVITY WILL OCCUR IN, NOR THAT ANY CONSTRUCTION EQUIPMENT OR MATERIALS WILL ENTER, ANY PORTION OF STR-1 AND THAT THE STREAM AND SURROUNDING VEGETATION WILL NOT BE DISTURBED AND OTHER POLLUTANTS EXCEPT AT THE PERMITTED LOCATIONS.

NOTE: THE CONTRACTOR SHALL RESTORE STREAM TO PRECONSTRUCTION CONDITIONS ONCE IN-CHANNEL WORK HAS BEEN COMPLETED.

NOTE: EMBEDDED CLASS C RIP-RAP (ITEM NO. 709-05.09) AND GEOTEXTILE (TYPE IV)(STABILIZATION) (ITEM NO. 740-10.04) SHALL BE PLACED ALONG THE STREAM BANKS AS SHOWN BELOW FOR THE STREAM BANK RESTORATION DUE TO HIGH STREAM VELOCITIES AND THE POTENTIAL FOR HIGH STREAM FLOW VOLUMES.

STA. 213+43.49 SR 107(UNICOI DR.) =
STA. 902+85.00 HAUL ROAD
N 697859.3872
E 3045756.4812

86006-2235-94
END PROJ. BR-STP-107(28)
STA. 213+73.97 (R.O.W.)
N 697889.6859
E 3045753.1061

STA. 214+20.00 SR 107(UNICOI DR.) =
STA. 214+20.00 SR 173(ERWIN HWY) =
STA. 300+00.00 SR 107
N 697935.4301
E 3045748.0104

86006-3235-94
END PROJ. BR-STP-107(28)
STA. 216+50.00 (CONST.)
N 698164.0162
E 3045722.5472

86006-2235-94
BEGIN PROJ. BR-STP-107(28)
STA. 208+00.00 (R.O.W.)
N 697318.6582
E 3045801.6275

86006-3235-94
BEGIN PROJ. BR-STP-107(28)
STA. 207+75.00 (CONST.)
N 697293.8548
E 3045798.5115

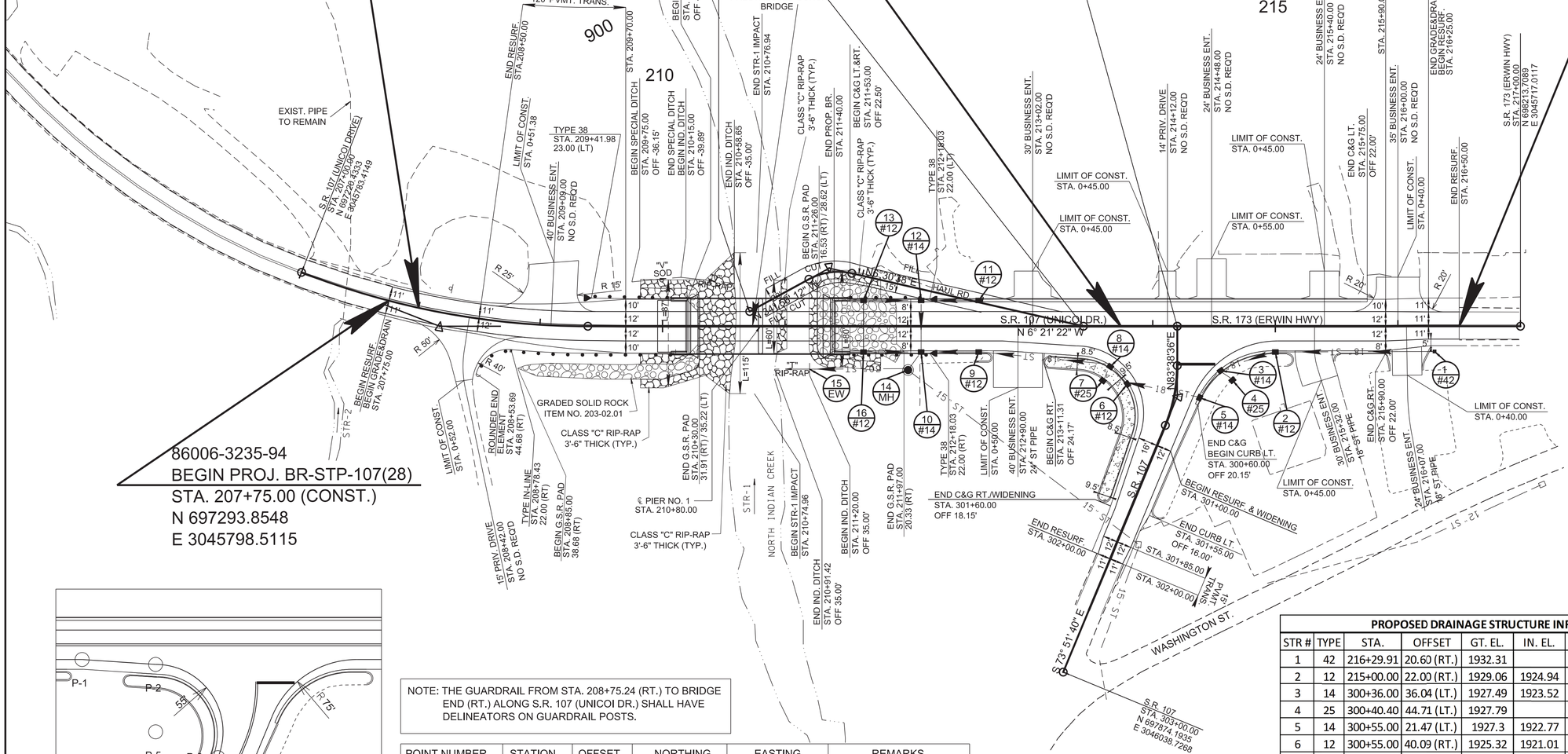

INTERSECTION RADIUS DETAILS
SCALE 1"=50'

NOTE: THE GUARDRAIL FROM STA. 208+75.24 (RT.) TO BRIDGE END (RT.) ALONG S.R. 107 (UNICOI DR.) SHALL HAVE DELINEATORS ON GUARDRAIL POSTS.

POINT NUMBER	STATION	OFFSET	NORTHING	EASTING	REMARKS
P-1	300+12.00	142.45'	697795.1817	3045775.7075	S.R. 107
P-2	300+16.00	82.45'	697855.2557	3045773.0404	S.R. 107
P-3	301+00.86	16.00'	697914.1772	3045842.9904	S.R. 107
P-4	301+60.86	12.00'	697901.3416	3045901.7377	S.R. 107
P-5	301+00.86	71.00'	697861.3447	3045827.7023	S.R. 107

NOTE: IT IS IMPERATIVE THAT RADII ARE CONSTRUCTED AS DETAILED. DETAILS REFLECT THE MINIMUM APPROPRIATE VEHICLE TURNING PATHS.

SEE SHEET 5 FOR S.R. 107 AND HAUL ROAD PROPOSED PROFILES.

PROPOSED DRAINAGE STRUCTURE INFORMATION

STR #	TYPE	STA.	OFFSET	GT. EL.	IN. EL.	IN. EL.	IN. EL.	OUT. EL.
1	42	216+29.91	20.60 (RT.)	1932.31				1929.37
2	12	215+00.00	22.00 (RT.)	1929.06	1924.94			1924.77
3	14	300+36.00	36.04 (LT.)	1927.49	1923.52	1923.46		1922.87
4	25	300+40.40	44.71 (LT.)	1927.79				1923.89
5	14	300+55.00	21.47 (LT.)	1927.3	1922.77			1922.44
6	12	300+55.00	40.09 (RT.)	1925.32	1921.01			1920.84
7	25	300+53.57	59.19 (RT.)	1925.16				1920.81
8	14	300+35.00	55.23 (RT.)	1924.82	1920.74	1920.74		1920.41
9	12	212+58.00	22.00 (RT.)	1924.15	1919.79			1919.29
10	14	212+11.00	22.00 (RT.)	1924.02	1919.09	1919.22	1918.9	1918.57
11	12	212+58.00	22.00 (LT.)	1924.15				1920.25
12	14	212+11.00	22.00 (LT.)	1924.02	1919.43	1919.43		1919.10
13	12	211+64.00	22.00 (LT.)	1924.15				1920.25
14	MH	212+00.39	35.72 (RT.)	1924.27	1918.51	1919.33		1916.68
15	EW	211+20.00	35.00 (RT.)					1916.29
16	12	211+64.00	22.00 (RT.)	1924.15				1920.25

SEALED BY

JAMES B. MORGAN
REGISTERED ENGINEER
AGRICULTURE
COMMERCE
111168
STATE OF TENNESSEE

07/31/2024

COORDINATES ARE NAD 83(1995), ARE DATUM ADJUSTED BY THE FACTOR OF 1.00012 AND TIED TO THE TGRN. ALL ELEVATIONS ARE REFERENCED TO THE NAVD 1988 WITH GEOID 12B.

STATE OF TENNESSEE
DEPARTMENT OF TRANSPORTATION

PROPOSED LAYOUT

STA. 207+75 TO STA. 216+50
SCALE: 1"= 50'

31-JUL-2024 10:10
\\tdot01nas002.tdot.state.tn.us\01Shared\SURVDES\Design\PROJECTS\Unicoi SR 107\004B.sht

TYPE	YEAR	PROJECT NO.	SHEET NO.
R.O.W.	2020	BR-STP-107(28)	4C
PS&E	2024	BR-STP-107(28)	4C

REV. 02/23/22: UPDATED PROPOSED PIPES, CATCH BASIN LOCATIONS, TYPES, AND STRUCTURE INFORMATION FOR NOS. 3, 5, 6, 7, 8, 9, & 10.

PROPOSED DRAINAGE STRUCTURE INFORMATION

STR #	TYPE	STA.	OFFSET	GT. EL.	IN. EL.	IN. EL.	IN. EL.	OUT. EL.
1	42	216+29.91	20.60 (RT.)	1932.31				1929.37
2	12	215+00.00	22.00 (RT.)	1929.06	1924.94			1924.77
3	14	300+36.00	36.04 (LT.)	1927.49	1923.52	1923.46		1922.87
4	25	300+40.40	44.71 (LT.)	1927.79				1923.89
5	14	300+55.00	21.47 (LT.)	1927.3	1922.77			1922.44
6	12	300+55.00	40.09 (RT.)	1925.32	1921.01			1920.84
7	25	300+53.57	59.19 (RT.)	1925.16				1920.81
8	14	300+35.00	55.23 (RT.)	1924.82	1920.74	1920.74		1920.41
9	12	212+58.00	22.00 (RT.)	1924.15	1919.79			1919.29
10	14	212+11.00	22.00 (RT.)	1924.02	1919.09	1919.22	1918.9	1918.57
11	12	212+58.00	22.00 (LT.)	1924.15				1920.25
12	14	212+11.00	22.00 (LT.)	1924.02	1919.43	1919.43		1919.10
13	12	211+64.00	22.00 (LT.)	1924.15				1920.25
14	MH	212+00.39	35.72 (RT.)	1924.27	1918.51	1919.33		1916.68
15	EW	211+20.00	35.00 (RT.)					1916.29
16	12	211+64.00	22.00 (RT.)	1924.15				1920.25

86006-2235-94
BEGIN PROJ. BR-STP-107(28)
STA. 208+00.00 (R.O.W.)
N 697318.6582
E 3045801.6275

86006-2235-94
END PROJ. BR-STP-107(28)
STA. 213+73.97 (R.O.W.)
N 697889.6859
E 3045753.1061

86006-3235-94
BEGIN PROJ. BR-STP-107(28)
STA. 207+75.00 (CONST.)
N 697293.8548
E 3045798.5115

86006-3235-94
END PROJ. BR-STP-107(28)
STA. 216+50.00 (CONST.)
N 698164.0162
E 3045722.5472

S.R. 107 (UNICOI DR.)/S.R. 173 (ERWIN HWY)

SEALED BY

JAMES B. MORGAN
REGISTERED ENGINEER
AGRICULTURE
COMMERCE
No. 111658
STATE OF TENNESSEE

07/31/2024

COORDINATES ARE NAD 83(1995), ARE DATUM ADJUSTED BY THE FACTOR OF 1.00012 AND TIED TO THE TGRN. ALL ELEVATIONS ARE REFERENCED TO THE NAVD 1988 WITH GEOID 12B.

STATE OF TENNESSEE
DEPARTMENT OF TRANSPORTATION

PROPOSED PROFILE

STA. 207+75 TO STA. 216+50

SCALE: 1"= 50' HORIZ.
1"=5 ' VERT.

31-JUL-2024 10:10
\\tdot01nas002.tdot.state.tn.us\01Shared\SURVDES\Design\PROJECTS\Unicoi SR 107\004C.sht

TYPE	YEAR	PROJECT NO.	SHEET NO.
R.O.W.	2020	BR-STP-107(28)	5
PS&E	2024	BR-STP-107(28)	5

REV. 02/23/22: MODIFIED THE SUPER ELEVATION DESIGN ALONG S.R. 107. UPDATED PROPOSED PIPES, CATCH BASIN LOCATIONS, TYPES, AND STRUCTURE INFORMATION FOR NOS. 3, 5, 6, & 8.

PROPOSED DRAINAGE STRUCTURE INFORMATION

STR #	TYPE	STA.	OFFSET	GT. EL.	IN. EL.	IN. EL.	OUT. EL.
3	14	300+36.00	36.04 (LT.)	1927.49	1923.52	1923.46	1922.87
5	14	300+55.00	21.47 (LT.)	1927.3	1922.77		1922.44
6	12	300+55.00	40.09 (RT.)	1925.32	1921.01		1920.84
8	14	300+35.00	55.23 (RT.)	1924.82	1920.74	1920.74	1920.41

STA. 300+00.00 SR 107 = STA. 214+20.00 SR 107 (UNICOI DR.) =
STA. 214+20.00 SR 173 (ERWIN HWY)
N 697935.4301
E 3045748.0104

OH WIRE
STA. 300+24.58
LOW WIRE EL.1944.48'
TEMP. ____ DEG.
_ POWER
1 TELEPHONE
_ CABLE
_ GUY WIRE

OH WIRE
STA. 301+64.06
LOW WIRE EL.1946.86'
TEMP. ____ DEG.
1 POWER
7 TELEPHONE
_ CABLE
_ GUY WIRE

BEGIN GRADE&DRAIN
VPI 300+12.00
EL. 1927.1407

VC = 60.00'
K = 17

VPC 300+14.00
EL. 1927.1107

VPI 300+44.00
EL. 1926.6607

VPT 300+74.00
EL. 1927.2613

BEGIN RESURF. & WIDENING
STA. 301+40.00

END WIDENING
BEGIN RESURF. ONLY
STA. 301+60.00

END RESURF.
STA. 302+00.00

EXISTING GROUND

CB 1 (TBR)
STA. 300+24.11
37.61' (LT)
TOP 1926.94
INVERT
INACCESSIBLE

3 #14
5 #14
8 #14
6 #12

3.00%
18" RCP
TO CB2
-1.50%
2.00%
18" RCP
18" ST CMP
(TBR)
ELEVATION
UNDETERMINED
0.50%
2.50%
18" RCP
0.70%
0.80%
18" RCP
TO CB9

CB 2 (TBR)
STA. 300+26.28
24.93' (RT)
TOP 1924.68
INVERT 1923.07

PROPOSED GRADE

15" ST RCP

CB
STA. 301+80.41
17.00' (LT)
TOP 1928.67
INVERT 1925.62

15" RCP
STA. 301+75.82
ELEVATION 1925.22

18" CMP (TBR)
STA. 300+25.49
ELEVATION
UNDETERMINED

INVERT 1918.96

STA. 300+12.00
LT.&RT.

STA. 300+18.67 LT.

STA. 300+40.33
LT./RT.

STA. 300+57.14
LT.&RT.

STA. 300+90.47 RT.

STA. 301+57.14 LT./RT.

STA. 302+00.00 LT.&RT.

+0.027 LT.
F.G.
+0.040 LT.
F.G.
-0.023 RT.
-0.040 RT.
-0.020 RT.
-0.020 LT./RT.

S.R. 107

SEE SHEET 4B FOR PROPOSED LAYOUT

VPI 901+48.00
EL. 1925.1750

LIMIT OF CONST.
902+33.95
EL. 1925.9328

VPI 900+60.00
EL. 1917.9300

VC = 25.00'

14.00%

6.69%

EXISTING GROUND

VPI 900+15.00
EL. 1913.3800

VC = 22.00'

15.00%

1.50%

VC = 30.00'

VC = 15.00'

VPI 900+95.00
EL. 1918.4660

4.00%

VPI 900+35.00
EL. 1914.1800

HAUL ROAD

SEE SHEET 4B FOR PROPOSED LAYOUT

300+00 301+00 302+00 303+00 900+00 901+00 902+00 903+00

SEALED BY

JAMES B. MORGAN
REGISTERED ENGINEER
No. AGRICULTURE
COMMERCE
111658
STATE OF TENNESSEE

07/31/2024

COORDINATES ARE NAD 83(1995), ARE DATUM ADJUSTED BY THE FACTOR OF 1.00012 AND TIED TO THE TGRN. ALL ELEVATIONS ARE REFERENCED TO THE NAVD 1988 WITH GEOID 12B.

STATE OF TENNESSEE
DEPARTMENT OF TRANSPORTATION

SIDE ROAD AND HAUL ROAD PROFILES

SCALE: 1"= 50' HORIZ.
1"=5 ' VERT.

31-JUL-2024 10:11
\\tdot01nas002.tdot.state.tn.us\01Shared\SURVDES\Design\PROJECTS\Unicoi SR 107\005.sht

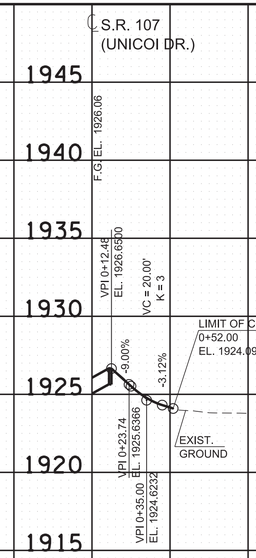

STA. 208+42.00
15' GRAVEL PRIVATE DRIVE
NO S.D. REQ'D
TRACT NO. 4

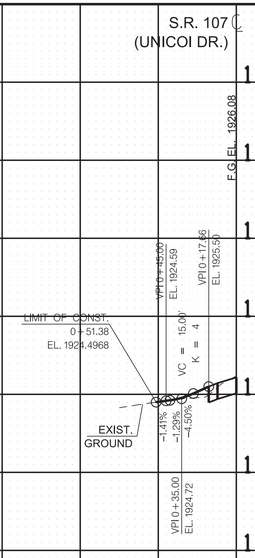

STA. 209+09.00
40' GRAVEL BUSINESS ENT.
NO S.D. REQ'D
TRACT NO. 6

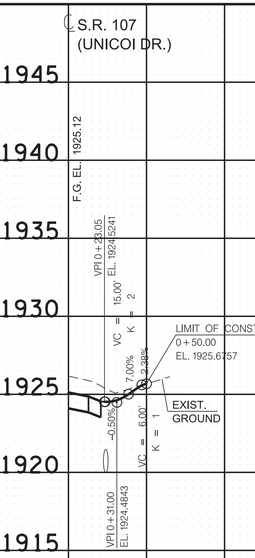

STA. 212+90.00
40' ASP. BUSINESS ENT.
18" ST PIPE
TRACT NO. 8

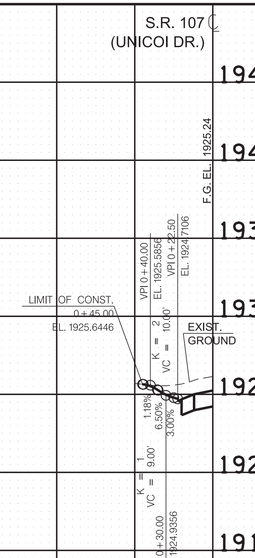

STA. 213+02.00
30' ASP. BUSINESS ENT.
NO S.D. REQ'D
TRACT NO. 11

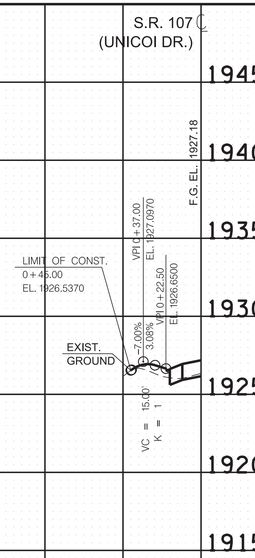

STA. 214+12.00
14' ASP. PRIVATE DRIVE
NO S.D. REQ'D
TRACT NO. 13

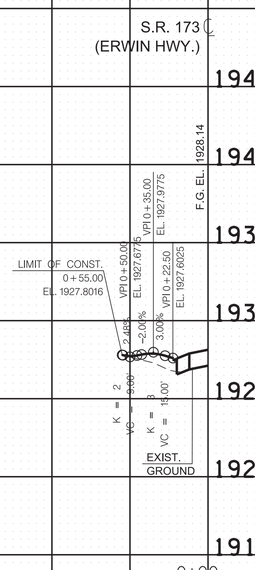

STA. 214+48.00
24' ASP. BUSINESS ENT.
NO S.D. REQ'D
TRACT NO. 13

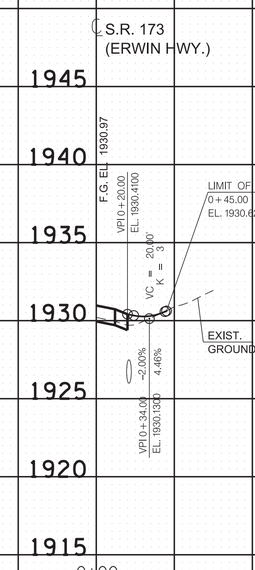

STA. 215+32.00
30' ASP. BUSINESS ENT.
18" ST PIPE
TRACT NO. 10

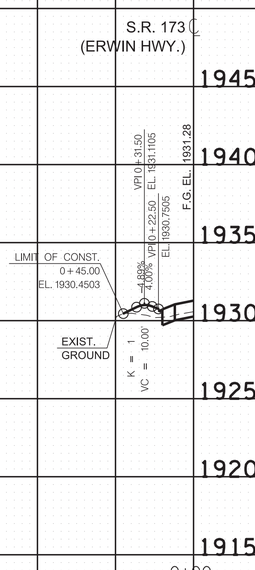

STA. 215+40.00
24' ASP. BUSINESS ENT.
NO S.D. REQ'D
TRACT NO. 13

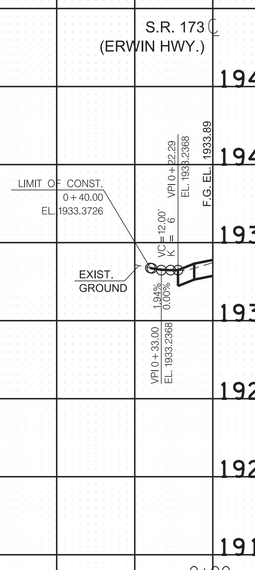

STA. 216+00.00
35' ASP. BUSINESS ENT.
NO S.D. REQ'D
TRACT NO. 15

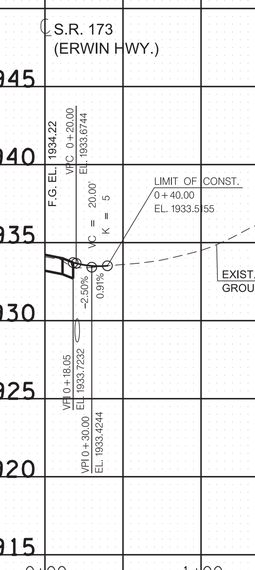

STA. 216+07.00
24' ASP. BUSINESS ENT.
18" ST PIPE
TRACT NO. 14

TYPE	YEAR	PROJECT NO.	SHEET NO.
R.O.W.	2020	BR-STP-107(28)	6
PS&E	2024	BR-STP-107(28)	6

REV. 02/23/22: UPDATED PROPOSED ST. PIPE SIZE AND LOCATION ON TRACT NO. 8 DRIVEWAY PROFILE.

SEALED BY

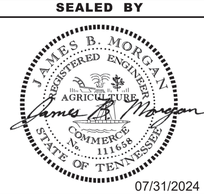

07/31/2024

COORDINATES ARE NAD 83(1995), ARE DATUM ADJUSTED BY THE FACTOR OF 1.00012 AND TIED TO THE TGRN. ALL ELEVATIONS ARE REFERENCED TO THE NAVD 1988 WITH GEOID 12B.

STATE OF TENNESSEE
DEPARTMENT OF TRANSPORTATION

PRIVATE DRIVE, BUSINESS, AND FIELD ENTRANCE PROFILES

SCALE: 1"= 50' HORIZ.
1"=5 ' VERT.

31-JUL-2024 10:11
\\tdot01nas002.tdot.state.tn.us\01Shared\SURVDES\Design\PROJECTS\Unicoi SR 107\006.sht

TYPE	YEAR	PROJECT NO.	SHEET NO.
R.O.W.	2020	BR-STP-107(28)	7
PS&E	2024	BR-STP-107(28)	7

86006-2235-94
BEGIN PROJ. BR-STP-107(28)
STA. 208+00.00 (R.O.W.)
N 697318.6582
E 3045801.6275

86006-2235-94
END PROJ. BR-STP-107(28)
STA. 213+73.97 (R.O.W.)
N 697889.6859
E 3045753.1061

86006-3235-94
END PROJ. BR-STP-107(28)
STA. 216+50.00 (CONST.)
N 698164.0162
E 3045722.5472

86006-3235-94
BEGIN PROJ. BR-STP-107(28)
STA. 207+75.00 (CONST.)
N 697293.8548
E 3045798.5115

900
210
215
300

S.R. 107
(UNICOI DR.)

S.R. 173
(ERWIN HWY)

N 34° 58' 12" W
N 6° 30' 38" E
N 6° 21' 22" W
N 83° 38' 36" E
S 73° 51' 40" E
N 6° 21' 22" W

STR-2
STR-1
NORTH INDIAN CREEK

WASHINGTON ST.

DRAINAGE DATA FOR
EXISTING STRUCTURE: 24" RCP

INLET	1916.03	ELEV.
OUTLET	1914.02	ELEV.
SKEW	90	DEG.
FLOW	RIGHT TO LEFT	
DRAINAGE AREA	99	AC.
TERRAIN	FLAT	

DRAINAGE DATA FOR
STATION: 207+38.80
EXISTING STRUCTURE: 18" RCP

INLET	1918.72	ELEV.
OUTLET	UNKNOWN	ELEV.
SKEW	101	DEG.
FLOW	RIGHT TO LEFT	
DRAINAGE AREA	13	AC.
TERRAIN	FLAT	

DRAINAGE DATA FOR
STATION: 302+93.46
EXISTING STRUCTURE: 15" RCP

INLET	1927.76	ELEV.
OUTLET	1927.68	ELEV.
SKEW	N/A	DEG.
DRAINAGE AREA	14	AC.
TERRAIN	HILLY	

DRAINAGE DATA FOR
STATION: 216+08.31
EXISTING STRUCTURE: 12" CMP

INLET	1932.31	ELEV.
OUTLET	1930.85	ELEV.
SKEW	N/A	DEG.
DRAINAGE AREA	1	AC.
TERRAIN	FLAT	

DRAINAGE DATA FOR
STATION: 211+09.92
EXISTING STRUCTURE: CONC. GIRDER BRIDGE
BRIDGE ID #86SR107007

INLET	1911.47	ELEV.
OUTLET	1911.17	ELEV.
SKEW	90	DEG.
FLOW	RIGHT TO LEFT	
DRAINAGE AREA	20,938	AC.
TERRAIN	MOUNTAINS	
DISCHARGE (Q100)	5960	CFS
VELOCITY (Q100)	14.17	FT/S

NOT TO SCALE

SEALED BY

JAMES B. MORGAN
REGISTERED ENGINEER
DEPARTMENT OF AGRICULTURE
COMMERCE
111658
STATE OF TENNESSEE

07/31/2024

COORDINATES ARE NAD 83(1995), ARE DATUM ADJUSTED BY THE FACTOR OF 1.00012 AND TIED TO THE TGRN. ALL ELEVATIONS ARE REFERENCED TO THE NAVD 1988 WITH GEOID 12B.

STATE OF TENNESSEE
DEPARTMENT OF TRANSPORTATION

DRAINAGE MAP

STA. 207+75 TO STA. 216+50
SCALE: 1"=200'

31-JUL-2024 10:11
\\tdot01nas002.tdot.state.tn.us\01Shared\SURVDES\Design\PROJECTS\Unicoi SR 107\007.sht

TYPE	YEAR	PROJECT NO.	SHEET NO.
PS&E	2024	BR-STP-107(28)	8

SUBSECTION 3 – EROSION PREVENTION AND SEDIMENT CONTROL GENERAL NOTES

EROSION PREVENTION AND SEDIMENT CONTROL GENERAL NOTES

INSPECTION, MAINTENANCE & REPAIR

(11) REFER TO THE STORM WATER POLLUTION AND PREVENTION PLAN SHEET SERIES (S-1) FOR SWPPP, PERMITS, AND RECORDS NOTES.

GOOD HOUSEKEEPING MEASURES & WASTE DISPOSAL

(29) THE CONTRACTOR SHALL ESTABLISH AND MAINTAIN A PROACTIVE METHOD TO PREVENT LITTER AND CONSTRUCTION WASTES FROM ENTERING WATERS OF THE STATE/U.S. THESE MATERIALS SHALL BE REMOVED FROM STORMWATER EXPOSURE PRIOR TO ANTICIPATED STORM EVENTS OR BEFORE BEING CARRIED OFFSITE BY WIND, OR OTHERWISE PREVENTED FROM BECOMING A POLLUTANT SOURCE FOR STORMWATER DISCHARGES. AFTER USE, MATERIALS USED FOR EPSC SHALL BE REMOVED FROM THE SITE.

(30) THE CONTRACTOR SHALL TAKE APPROPRIATE STEPS TO ENSURE THAT PETROLEUM PRODUCTS OR OTHER CHEMICAL POLLUTANTS ARE PREVENTED FROM ENTERING WATERS OF THE STATE/U.S. ALL EQUIPMENT REFUELING, SERVICING, AND STAGING AREAS SHALL COMPLY WITH ALL LOCAL, STATE, AND FEDERAL LAWS, RULES, REGULATIONS, AND ORDINANCES, INCLUDING THOSE OF THE NATIONAL FIRE PROTECTION ASSOCIATION. APPROPRIATE CONTAINMENT MEASURES FOR THESE AREAS SHALL BE USED.

(31) CONTRACTORS SHALL PROVIDE DESIGNATED TRUCK WASHOUT AREAS ON THE SITE. THESE AREAS MUST BE SELF CONTAINED, NOT CONNECTED TO ANY STORMWATER OUTLET OF THE SITE, AND PROPERLY SIGNED. WASH DOWN OR WASTE DISCHARGE OF CONCRETE TRUCKS SHALL NOT BE PERMITTED ONSITE UNLESS PROPER SETTLEMENT AREAS HAVE BEEN PROVIDED IN ACCORDANCE WITH BOTH STATE AND FEDERAL REGULATIONS.

(32) WHEEL WASH WATER SHALL BE COLLECTED AND ALLOWED TO SETTLE OUT SUSPENDED SOLIDS PRIOR TO DISCHARGE. WHEEL WASH WATER SHALL NOT BE DISCHARGED DIRECTLY INTO ANY STORMWATER SYSTEM OR STORMWATER TREATMENT SYSTEM.

(33) IF PORTABLE SANITARY FACILITIES ARE PROVIDED ON CONSTRUCTION SITES, SANITARY WASTE SHALL BE COLLECTED FROM THE PORTABLE UNITS IN A TIMELY MANNER BY A LICENSED WASTE MANAGEMENT CONTRACTOR OR AS REQUIRED BY ANY REGULATIONS. THE CONTRACTOR SHALL OBTAIN ANY AND ALL NECESSARY PERMITS TO DISPOSE OF SANITARY WASTE.

(34) ONLY CONSTRUCTION PRODUCTS NEEDED SHALL BE STORED ONSITE BY THE CONTRACTOR. THE CONTRACTOR SHALL STORE ALL MATERIALS UNDER COVER AND IN APPROPRIATE CONTAINERS. PRODUCTS MUST BE STORED IN ORIGINAL CONTAINERS AND LABELED. MATERIAL MIXING SHALL BE CONDUCTED IN ACCORDANCE WITH THE MANUFACTURER'S RECOMMENDATIONS. THE CONTRACTOR'S RESPONSIBLE PARTY SHALL INSPECT MATERIALS STORAGE AREAS REGULARLY TO ENSURE PROPER USE AND DISPOSAL.

(35) WHEN POSSIBLE, ALL PRODUCTS SHALL BE USED COMPLETELY BEFORE PROPERLY DISPOSING OF THE CONTAINER OFFSITE. THE MANUFACTURER'S DIRECTIONS FOR DISPOSAL OF MATERIALS AND CONTAINERS SHALL BE FOLLOWED.

(36) ALL PAINT CONTAINERS SHALL BE TIGHTLY SEALED AND STORED WHEN NOT REQUIRED FOR USE. EXCESS PAINT SHALL BE DISPOSED OF ACCORDING TO THE MANUFACTURER'S INSTRUCTIONS AND APPLICABLE STATE AND LOCAL REGULATIONS.

(37) ALL HAZARDOUS WASTE MATERIALS SHALL BE DISPOSED OF IN A MANNER WHICH IS COMPLIANT WITH LOCAL OR STATE REGULATIONS. SITE PERSONNEL SHALL BE INSTRUCTED IN THESE PRACTICES, AND THE INDIVIDUAL DESIGNATED AS THE CONTRACTOR'S RESPONSIBLE PARTY SHALL BE RESPONSIBLE FOR SEEING THAT THESE PRACTICES ARE FOLLOWED. THE CONTRACTOR SHALL OBTAIN ANY AND ALL NECESSARY PERMITS TO DISPOSE OF HAZARDOUS MATERIAL.

(38) OPEN BURNING IS PROHIBITED UNLESS IT IS SPECIFICALLY ALLOWED BY LAW. IF ALLOWED, NATURAL VEGETATION, TREES, AND UNTREATED LUMBER SHALL BE THE ONLY MATERIALS THAT CAN BE OPEN BURNED. THE CONTRACTOR SHALL BE RESPONSIBLE FOR OBTAINING ALL APPLICABLE STATE AND LOCAL PERMITS PRIOR TO ANY BURNING.

(39) DISPOSAL OF ONSITE VEGETATION AND TREES BY CHIPPING THEM INTO MULCH IS PREFERABLE TO OPEN BURNING. THIS MULCH MAY BE USED AS AN ONSITE SOIL STABILIZATION MEASURE WHERE APPROPRIATE.

(40) WASTE MATERIAL (EARTH, ROCK, ASPHALT, CONCRETE, ETC.) NOT REQUIRED FOR THE CONSTRUCTION OF THE PROJECT WILL BE DISPOSED OF BY THE CONTRACTOR. IMPACTS TO WATERS OF THE STATE/U.S. SHALL BE AVOIDED IF POSSIBLE. IF UNAVOIDABLE, THE CONTRACTOR WILL OBTAIN ANY AND ALL NECESSARY PERMITS INCLUDING, BUT NOT LIMITED TO NPDES, AQUATIC RESOURCES ALTERATION PERMIT(S), CORPS OF ENGINEERS SECTION 404 PERMITS, AND TVA SECTION 26A PERMITS TO DISPOSE OF WASTE MATERIALS.

STREAMS, WETLANDS & BUFFER ZONES

(54) ANY WORK WITHIN THE STREAM CHANNEL AREA (E.G., PIER FOOTING, RIP-RAP PLACEMENT, CULVERT/BRIDGE CONSTRUCTION, ETC.) SHALL BE SEPARATED FROM FLOWING WATER OR EXPECTED FLOW PATH AND PERFORMED DURING LOW FLOW CONDITIONS. ALL ITEMS USED WITHIN THE STREAM CHANNEL AREA FOR DIVERSION OF FLOW (OR EXPECTED FLOW), UNLESS SPECIFIED IN THE PLANS, SHALL NOT BE PAID FOR DIRECTLY BUT SHALL BE INCLUDED IN THE COST OF OTHER ITEMS. THIS NOTE EXCLUDES ANY ITEMS SPECIFIED IN THE PLANS FOR THE TEMPORARY DIVERSION CHANNELS (EC-STR-31) AND TEMPORARY DIVERSION CULVERTS (EC STR-32) FOR SINGLE BARREL CULVERT CONSTRUCTION.

SEALED BY

07/31/2024

STATE OF TENNESSEE
DEPARTMENT OF TRANSPORTATION

EROSION PREVENTION AND SEDIMENT CONTROL NOTES

31-JUL-2024 10:11
\\tdot01nas002.tdot.state.tn.us\01Shared\SURVDES\Design\PROJECTS\Unicoi SR 107\008.sht

TYPE	YEAR	PROJECT NO.	SHEET NO.
R.O.W.	2020	BR-STP-107(28)	8
PS&E	2024	BR-STP-107(28)	9

TABULATED EPSC QUANTITIES

	ITEM NO.	DESCRIPTION	UNIT	QUANTITY 86006-3235-94
(1)	203-01	ROAD & DRAINAGE EXCAVATION (UNCLASSIFIED)	C.Y.	7
	209-05	SEDIMENT REMOVAL	C.Y.	67
(5)	209-08.02	TEMPORARY SILT FENCE (WITH BACKING)	L.F.	582
	209-08.03	TEMPORARY SILT FENCE (WITHOUT BACKING)	L.F.	514
	209-08.07	ROCK CHECK DAM PER	EACH	4
	209-08.08	ENHANCED ROCK CHECK DAM	EACH	6
	209-09.03	SEDIMENT FILTER BAG (15' X 15')	EACH	1
	209-09.43	CURB INLET PROTECTION (TYPE 4)	EACH	13
	209-40.30	CATCH BASIN PROTECTION (TYPE A)	EACH	4
	209-40.33	CATCH BASIN PROTECTION (TYPE D)	EACH	1
	209-65.03	TEMPORARY DIVERSION CHANNEL	L.F.	122
(4)	303-10.01	MINERAL AGGREGATE (SIZE 57)	TON	22
(1)	709-05.05	MACHINED RIP-RAP (CLASS A-3)	TON	50
(2)	709-05.09	MACHINED RIP-RAP (CLASS C)	TON	498
(3)	740-10.03	GEOTEXTILE (TYPE III)(EROSION CONTROL)	S.Y.	875
(2)	740-10.04	GEOTEXTILE (TYPE IV)(STABILIZATION)	S.Y.	298
	740-11.02	TEMPORARY SEDIMENT TUBE 12IN	L.F.	425
	805-12.02	EROSION CONTROL BLANKET (TYPE II)	S.Y.	451

FOOTNOTES:
(1) TO BE USED FOR TEMPORARY CONSTRUCTION ENTRANCE/EXIT.
(2) TO BE USED TO REBUILD STREAM BANKS.
(3) INCLUDES 86 SY FOR TEMPORARY CONSTRUCTION ENTRANCE/EXIST, 678 SY FOR TEMPORARY DIVERSION CHANNEL, AND 111 SY FOR SEDIMENT FILTER BAG.
(4) TO BE USED FOR SEDIMENT FILTER BAG.
(5) INCLUDES 102 L.F. FOR SEDIMENT FILTER BAG.

NOTE: ALL EROSION PREVENTION AND SEDIMENT CONTROL QUANTITIES ARE TO BE USED AS DIRECTED BY THE TDOT MANAGER.

EROSION PREVENTION AND SEDIMENT CONTROL LEGEND

SYMBOL	ITEM	STD. DWG.
SFB SFB SFB SFB	SEDIMENT FILTER BAG	EC-STR-2
SF SF SF SF	SILT FENCE	EC-STR-3B
SFB SFB SFB SFB	SILT FENCE WITH WIRE BACKING	EC-STR-3C
	ROCK CHECK DAM (V-DITCH)	EC-STR-6
	ENHANCED ROCK CHECK DAM (V-DITCH)	EC-STR-6A
A	CATCH BASIN PROTECTION (TYPE A)	EC-STR-19
D	CATCH BASIN PROTECTION (TYPE D)	EC-STR-19
TCE	TEMPORARY CONSTRUCTION EXIT	EC-STR-25
	TEMPORARY DIVERSION CHANNEL (35' WIDE, CLASS "C" RIP RAP, GEOTEXTILE LINING)	EC-STR-31
	EROSION CONTROL BLANKET	EC-STR-34
TUBE 12" TUBE 12"	12 INCH SEDIMENT TUBE	EC-STR-37
4	CURB INLET PROTECTION (TYPE 4)	EC-STR-39A

NOTE:
1. EROSION PREVENTION AND SEDIMENT CONTROL MEASURES FROM PREVIOUS PHASE TO REMAIN IN PLACE UNTIL NO LONGER NECESSARY.

SEALED BY

JAMES B. MORGAN
REGISTERED ENGINEER
DEPARTMENT OF AGRICULTURE
DEPARTMENT OF COMMERCE
No. 111658
STATE OF TENNESSEE

07/31/2024

STATE OF TENNESSEE
DEPARTMENT OF TRANSPORTATION

EROSION PREVENTION & SEDIMENT CONTROL (EPSC) LEGEND & TABULATION

31-JUL-2024 10:12
\\tdot01nas002.tdot.state.tn.us\01Shared\SURVDES\Design\PROJECTS\Unicoi SR 107\009.sht

TYPE	YEAR	PROJECT NO.	SHEET NO.
R.O.W.	2020	BR-STP-107(28)	9
PS&E	2024	BR-STP-107(28)	10

REV. 07/27/21: MODIFIED CONSTRUCTION EASEMENT ON TRACT 8.

REV. 02/23/22: MODIFIED CONSTRUCTION EASEMENT AND R.O.W. LINES ON TRACT 6. UPDATED SLOPE LINES ON SOUTH SIDE OF PROPOSED BRIDGE ON TRACT 4 AND ALONG S.R. 107 ON TRACT 10.

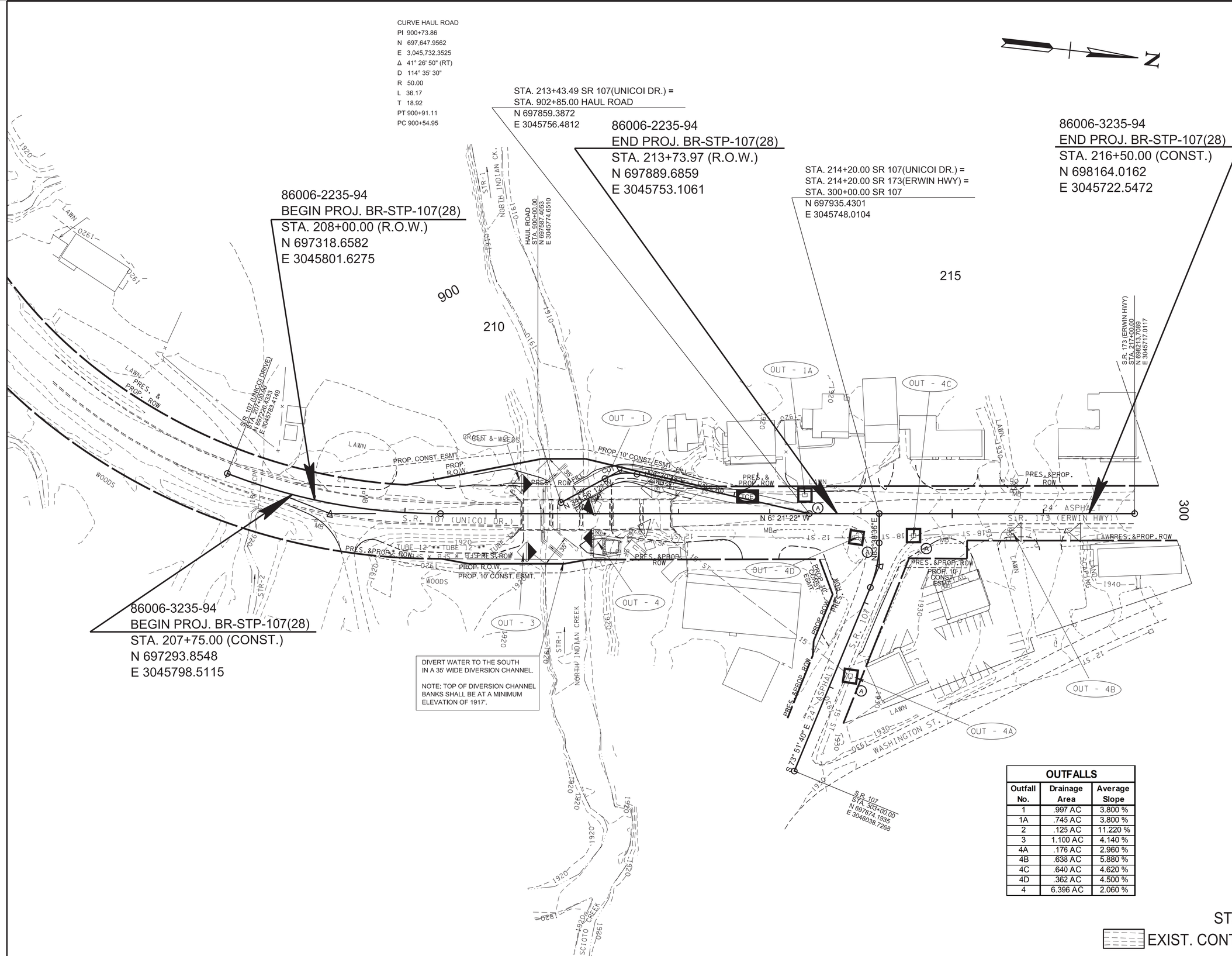

DIVERT WATER TO THE SOUTH IN A 35' WIDE DIVERSION CHANNEL.

NOTE: TOP OF DIVERSION CHANNEL BANKS SHALL BE AT A MINIMUM ELEVATION OF 1917'.

OUTFALLS		
Outfall No.	Drainage Area	Average Slope
1	.997 AC	3.800 %
1A	.745 AC	3.800 %
2	.125 AC	11.220 %
3	1.100 AC	4.140 %
4A	.176 AC	2.960 %
4B	.638 AC	5.880 %
4C	.640 AC	4.620 %
4D	.362 AC	4.500 %
4	6.396 AC	2.060 %

STAGE I

EXIST. CONTOURS

SEALED BY

JAMES B. MORGAN
REGISTERED ENGINEER
AGRICULTURE
COMMERCE
No. 111658
STATE OF TENNESSEE

07/31/2024

COORDINATES ARE NAD 83(1995), ARE DATUM ADJUSTED BY THE FACTOR OF 1.00012 AND TIED TO THE TGRN. ALL ELEVATIONS ARE REFERENCED TO THE NAVD 1988 WITH GEOID 12B.

STATE OF TENNESSEE
DEPARTMENT OF TRANSPORTATION

EROSION PREVENTION & SEDIMENT CONTROL (EPSC) PLANS

STA. 207+75 TO STA. 216+50

SCALE: 1"= 50'

31-JUL-2024 10:12
\\tdot01nas002.tdot.state.tn.us\01Shared\SURVDES\Design\PROJECTS\Unicoi SR 107\010.sht

TYPE	YEAR	PROJECT NO.	SHEET NO.
R.O.W.	2020	BR-STP-107(28)	10
PS&E	2024	BR-STP-107(28)	11

REV. 07/27/21: MODIFIED CONSTRUCTION EASEMENT ON TRACT 8.

REV. 02/23/22: MODIFIED CONSTRUCTION EASEMENT AND R.O.W. LINES ON TRACT 6. UPDATED SLOPE LINES ON SOUTH SIDE OF PROPOSED BRIDGE ON TRACT 4 AND ALONG S.R. 107 ON TRACT 10. UPDATED PROPOSED CATCH BASIN LOCATIONS ALONG S.R. 107, PROPOSED CONTOURS, AND EPSC MEASURE PLACEMENTS.

N

86006-2235-94
BEGIN PROJ. BR-STP-107(28)
STA. 208+00.00 (R.O.W.)
N 697318.6582
E 3045801.6275

86006-2235-94
END PROJ. BR-STP-107(28)
STA. 213+73.97 (R.O.W.)
N 697889.6859
E 3045753.1061

STA. 214+20.00 SR 107(UNICOI DR.) =
STA. 214+20.00 SR 173(ERWIN HWY) =
STA. 300+00.00 SR 107
N 697935.4301
E 3045748.0104

86006-3235-94
END PROJ. BR-STP-107(28)
STA. 216+50.00 (CONST.)
N 698164.0162
E 3045722.5472

86006-3235-94
BEGIN PROJ. BR-STP-107(28)
STA. 207+75.00 (CONST.)
N 697293.8548
E 3045798.5115

210

215

300

S.R. 107 (UNICOI DRIVE)
STA. 207+75.00
N 697293.4333
E 3045783.4149

S.R. 173 (ERWIN HWY)
STA. 217+00.00
N 698213.7089
E 3045717.0117

S.R. 107
STA. 305+00.00
N 697874.1935
E 3046036.7268

S 73° 51' 40" E
N 6° 21' 22" W
N 83° 38' 36" E

PRES. & PROP. ROW
PROP. R.O.W.
PROP. CONST. ESMT.
PROP. 10' CONST. ESMT.
PROP. 12' CONST. ESMT.
PROP. 10' CONST. ESMT.
PRES. &PROP. ROW
PRES. &PROP.ROW
PROP. 10' CONST. ESMT.
PROP. 12' CONST. ESMT.
PRES. &PROP. ROW
24' ASPHALT
S.R. 107 (UNICOI DR.)
S.R. 173 (ERWIN HWY)
NORTH INDIAN CREEK
SCIOTO CREEK
WASHINGTON ST
TCE
STR-1
STR-2
TUBE 12"
TUBE 12"
TUBE 12"
CMP
MB
MBr
SF
IS
1920
1930
1940

OUT - 1
OUT - 2
OUT - 3
OUT - 4
OUT - 4A
OUT - 4E
OUT - 4F
OUT - 4G
OUT - 4H
OUT - 4I
OUT - 4J
OUT - 4K
OUT - 4L
OUT - 4M
OUT - 4N
OUT - 4P
OUT - 4R
OUT - 4S
OUT - 4T

OUTFALLS		
Outfall No.	Drainage Area	Average Slope
1	.074 AC	3.000 %
2	.100 AC	13.050 %
3	1.065 AC	3.700 %
4A	.176 AC	2.960 %
4E	.311 AC	6.600 %
4F	.467 AC	5.570 %
4G	.396 AC	6.690 %
4H	.040 AC	4.500 %
4I	.064 AC	3.330 %
4J	.113 AC	4.110 %
4K	.106 AC	3.190 %
4L	.066 AC	2.350 %
4M	.116 AC	4.070 %
4N	.049 AC	4.010 %
4P	.849 AC	8.680 %
4R	.048 AC	4.010 %
4S	.080 AC	2.050 %
4T	.080 AC	2.050 %
4	7.547 AC	4.480 %

SEALED BY

JAMES B. MORGAN
REGISTERED ENGINEER
AGRICULTURE
COMMERCE
No. 111658
STATE OF TENNESSEE

James B. Morgan

07/31/2024

COORDINATES ARE NAD 83(1995), ARE DATUM ADJUSTED BY THE FACTOR OF 1.00012 AND TIED TO THE TGRN. ALL ELEVATIONS ARE REFERENCED TO THE NAVD 1988 WITH GEOID 12B.

STATE OF TENNESSEE
DEPARTMENT OF TRANSPORTATION

STAGE II

EXIST. CONTOURS

PROP. CONTOURS

EROSION PREVENTION & SEDIMENT CONTROL (EPSC) PLANS

STA. 207+75 TO STA. 216+50

SCALE: 1"= 50'

31-JUL-2024 10:12
\\tdot01nas002.tdot.state.tn.us\01Shared\SURVDES\Design\PROJECTS\Unicoi SR 107\011.sht

TYPE	YEAR	PROJECT NO.	SHEET NO.
PS&E	2024	BR-STP-107(28)	12

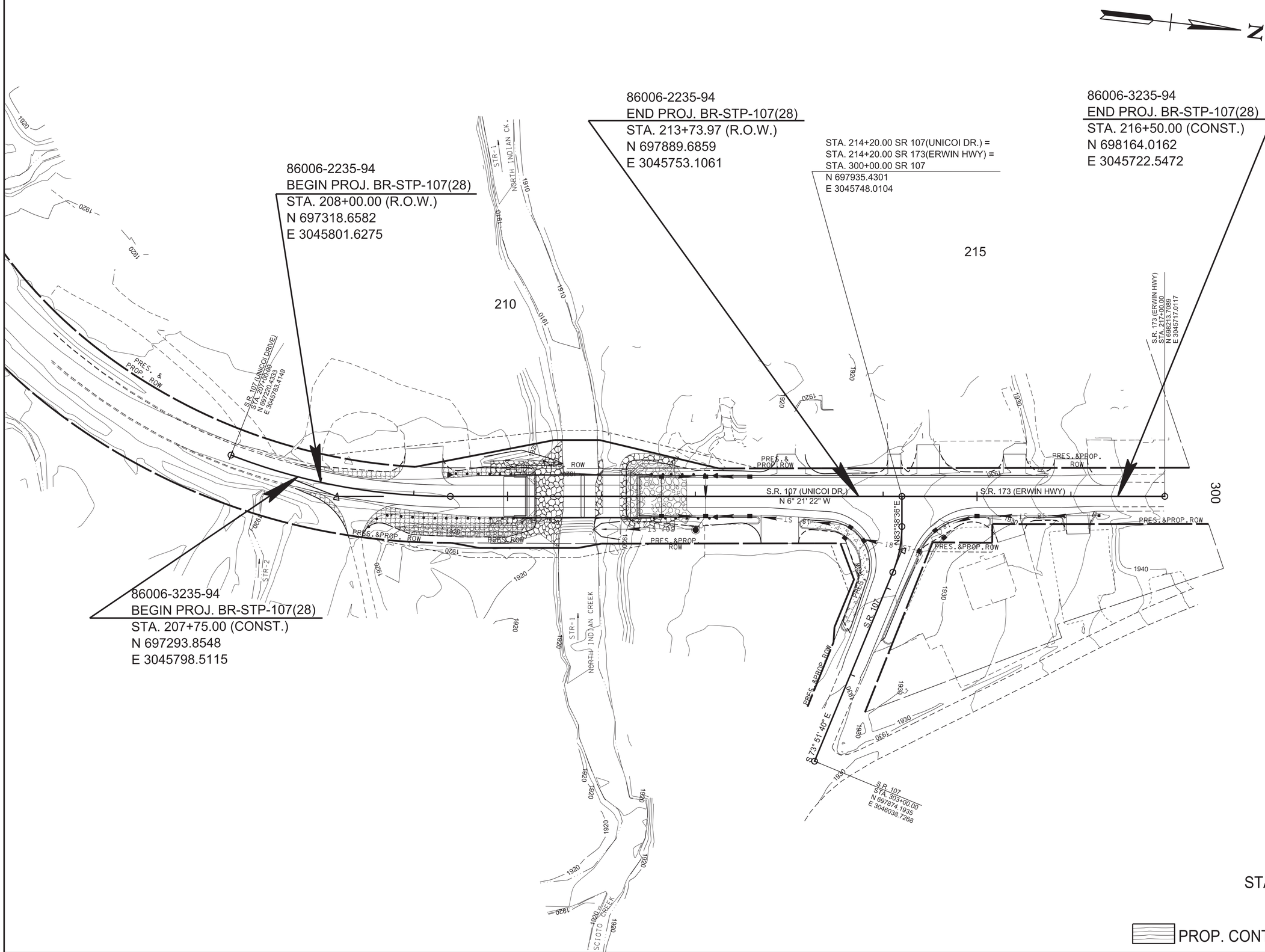

STAGE III

PROP. CONTOURS

SEALED BY

JAMES B. MORGAN
REGISTERED ENGINEER
AGRICULTURE
COMMERCE
No. 111658
STATE OF TENNESSEE

07/31/2024

COORDINATES ARE NAD 83(1995), ARE DATUM ADJUSTED BY THE FACTOR OF 1.00012 AND TIED TO THE TGRN. ALL ELEVATIONS ARE REFERENCED TO THE NAVD 1988 WITH GEOID 12B.

STATE OF TENNESSEE
DEPARTMENT OF TRANSPORTATION

EROSION PREVENTION & SEDIMENT CONTROL (EPSC) PLANS

STA. 207+75 TO STA. 216+50

SCALE: 1"= 50'

31-JUL-2024 10:13
\\tdot01nas002.tdot.state.tn.us\01Shared\SURVDES\Design\PROJECTS\Unicoi SR 107\012.sht

TYPE	YEAR	PROJECT NO.	SHEET NO.
R.O.W.	2020	BR-STP-107(28)	11
PS&E	2024	BR-STP-107(28)	13

N

86006-2235-94
BEGIN PROJ. BR-STP-107(28)
STA. 208+00.00 (R.O.W.)
N 697318.6582
E 3045801.6275

86006-2235-94
END PROJ. BR-STP-107(28)
STA. 213+73.97 (R.O.W.)
N 697889.6859
E 3045753.1061

86006-3235-94
END PROJ. BR-STP-107(28)
STA. 216+50.00 (CONST.)
N 698164.0162
E 3045722.5472

86006-3235-94
BEGIN PROJ. BR-STP-107(28)
STA. 207+75.00 (CONST.)
N 697293.8548
E 3045798.5115

STA. 214+20.00 SR 107(UNICOI DR.) =
STA. 214+20.00 SR 173(ERWIN HWY) =
STA. 300+00.00 SR 107
N 697935.4301
E 3045748.0104

S.R. 107 (UNICOI DRIVE)
STA. 207+00.00
N 697220.4333
E 3045783.4149

S.R. 173 (ERWIN HWY)
STA. 217+00.00
N 698213.7089
E 3045717.0117

S.R. 107
STA. 303+00.00
N 697874.1935
E 3046038.7268

S.R. 107 (UNICOI DR.)
N 6° 21' 22" W

S.R. 173 (ERWIN HWY)

N83°38'36"E

S 73° 51' 40"E

STR-1 NORTH INDIAN CREEK

STR-2

6" SSWL
6" DSYL
6" SSWL

6" SSWL
6" DSYL
6" SSWL

210
215
300

(20) TN-22a 24" X 12"; WEST; M3-4 24" X 12"; 107; TN-6b 30" X 24"
STA. 210+15+/- (LT.)

(19) ALTERNATE; INTERSTATE 26; M4-1 24" X 12"; M1-1 24" X 24"
STA. 210+15+/- (LT.)

(22) ERWIN 5
D2-1 42" X 18"
STA. 208+25 +/- (LT.)

(21) W1-2R 30" X 30"
STA. 209+75 +/- (LT.)

(18) Indian Creek; TN-5 36" X 18"
STA. 211+45 +/- (LT.)

(28) M4-5 24" x 12"; TO; M3-2 24" X 12"; EAST; TN-6b 30" X 24"; 173; M6-1L 21" X 15"
STA. 215+00 +/- (LT.)

(16) Tennessee Scenic Parkway; TN-22b 24" X 24"; EAST; M3-2 24" X 12"; 107; TN-6b 30" X 24"; M6-1L 21" X 15"; 1; TN-17a 6" X 12"
STA. 215+00 +/- (LT.)

(15) Tennessee Scenic Parkway; TN-22b 24" X 24"; WEST; M3-4 24" X 12"; 107; TN-6b 30" X 24"; M6-3 21" X 15"
STA. 214+27 +/- (LT.)

(17) DISCOVER TENNESSEE; SUNNYSIDE
STA. 214+27 +/- (LT.)
(EXIST. SIGN FACES TO BE USED, NEW SUPPORTS PROVIDED)

(25) M4-5 24" x 12"; TO; M3-2 24" X 12"; EAST; TN-6b 30" X 24"; 173; M5-1R 21" X 15"
STA. 209+50 +/- (RT.)

(2) Tennessee Scenic Parkway; TN-22b 24" X 24"; EAST; M3-2 24" X 12"; 107; TN-6b 30" X 24"; M5-1R 21" X 15"
STA. 209+50 +/- (RT.)

(3) Indian Creek; TN-5 36" X 18"
STA. 210+00 +/- (RT.)

(1) Johnson City; Buladean
72" X 36"
STA. 212+00 +/- (RT.)

(26) M4-5 24" x 12"; TO; M3-2 24" X 12"; EAST; TN-6b 30" X 24"; 173; M6-1 21" X 15"
STA. 213+60 +/- (RT.)

(4) Tennessee Scenic Parkway; TN-22b 24" X 24"; EAST; M3-2 24" X 12"; 107; TN-6b 30" X 24"; M6-1 21" X 15"
STA. 213+60 +/- (RT.)

(5) DISCOVER TENNESSEE; SUNNYSIDE
STA. 213+65 +/- (RT.)
(EXIST. SIGN FACES TO BE USED, NEW SUPPORTS PROVIDED)

(27) M4-5 24" x 12"; TO; M3-2 24" X 12"; EAST; TN-6b 30" X 24"; 173
STA. 301+50 +/- (RT.)

(6) TN-22a 24" X 12"; EAST; M3-2 24" X 12"; 107; TN-6b 30" X 24"
STA. 301+50 +/- (RT.)

(7) D11-1 24" X 18"; BIKE ROUTE; M5-1R 12" X 9"
STA. 302+75 +/- (LT.)

(23) Erwin; Johnson City
72" X 36"
STA. 300+70 +/- (LT.)

(11) STOP; R1-1 36"X36"
STA. 300+35 +/- (RT.)
CROSS TRAFFIC DOES NOT STOP; W4-4P 24" x 12"
STA. 300+30 +/- (LT.)

(8) Rock Creek
72" X 18"
STA. 301+75 +/- (LT.)

(12) BIKE ROUTE; D11-1 24" X 18"; M5-1L 12" X 9"
STA. 215+75 +/- (RT.)

(9) Tennessee Scenic Parkway; TN-22b 24" X 24"; WEST; M3-4 24" X 12"; 107; TN-6b 30" X 24"; M6-1L 21" X 15"
STA. 300+28 +/- (LT.)

(10) Tennessee Scenic Parkway; TN-22b 24" X 24"; WEST; M3-4 24" X 12"; 173; TN-6b 30" X 24"; M6-1R 21" X 15"
STA. 300+28 +/- (LT.)

(14) TN-22a 24" X 12"; WEST; M3-4 24" X 12"; 173; TN-6b 30" X 24"
STA. 216+35 +/- (RT.)

(13) TO; M4-5 24" X 12"; INTERSTATE 26; M1-1 24" X 24"
STA. 216+35 +/- (RT.)

SEALED BY

JAMES B. MORGAN
REGISTERED ENGINEER
DEPARTMENT OF AGRICULTURE
COMMERCE
No. 111668
STATE OF TENNESSEE

07/31/2024

COORDINATES ARE NAD 83(1995), ARE DATUM ADJUSTED BY THE FACTOR OF 1.00012 AND TIED TO THE TGRN. ALL ELEVATIONS ARE REFERENCED TO THE NAVD 1988 WITH GEOID 12B.

STATE OF TENNESSEE
DEPARTMENT OF TRANSPORTATION

SIGNING AND PAVEMENT MARKING PLAN
STA. 207+75 TO STA. 216+50
SCALE: 1"= 50'

31-JUL-2024 10:13
\\tdot01nas002.tdot.state.tn.us\01Shared\SURVDES\Design\PROJECTS\Unicoi SR 107\013.sht

ALL SIGNS SHOWN WITH DESIGNATIONS ARE TO BE FABRICATED AS DETAILED IN THE CURRENT EDITION OF THE "MANUAL ON UNIFORM TRAFFIC CONTROL DEVICES" OR THE CURRENT EDITION OF THE "TENNESSEE SUPPLEMENT TO THE STANDARD HIGHWAY SIGNS BOOK"

CONCRETE AND STEEL QUANTITIES FOR FOOTINGS ARE PER EACH

SIGN NO.	LEGEND	SHEET NO.	SIZE				COPY				SHIELD	ARROW	SIGN FACE			STEEL DESIGN (BREAK-AWAY)				MINIMUM VERTICAL CLEARANCE	REMARKS
			LENGTH	HEIGHT	RADIUS	BORDER WIDTH	CAPITAL	LOWER CASE	NUMERAL	SERIES			COPY	BACKGROUND	MATERIAL	SUPPORT TYPE	SUPPORT LENGTH	FOOTING	CONC. CU. YD. / REIN. STEEL LBS.		
1	↑ Johnson City Buladean →	13	72"	36"	2"	¾"	6"	4½"		D		SIGNCAD TYPE 2	WHITE (REF.)	GREEN (REF.)	0.100" SHEET ALUMINUM	P5	h_1 = 15'-3" h_2 = 16'-0"			7'	SEE THE DEPARTMENT'S CURRENT EDITION OF THE TENNESSEE SUPPLEMENT TO THE STANDARD HIGHWAY SIGNS BOOK FOR SIGN DETAILS; SLIP BASE NOT REQUIRED; SIGN BEHIND GUARDRAIL
2	Tennessee Scenic Parkway EAST 107 TN-22b M3-2 TN-6b M5-1R	13	24" 24" 30" 21"	24" 12" 24" 15"									GREEN (REF.) BLACK BLACK BLACK	WHITE (REF.) WHITE (REF.) BLACK/ WHITE (REF.) WHITE (REF.)	0.080" SHEET ALUMINUM	3"⊠ @ 4.83 #/FT.	h = 22'-0"			6'	SLIP BASE NOT REQUIRED; SIGN LOCATED BEHIND GUARDRAIL; ADD 4.27' TO SUPPORT LENGTH TO ACCOUNT FOR EMBEDMENT DEPTH
3 18	Indian Creek TN-5	13	36"	18"	2"	¾"	5" 4"	3¾" 3"		E MOD			WHITE (REF.)	GREEN (REF.)	0.080" SHEET ALUMINUM	P2	h = 11'-6" h = 13'-3"			7'	SEE THE DEPARTMENT'S CURRENT EDITION OF THE TENNESSEE SUPPLEMENT TO THE STANDARD HIGHWAY SIGNS BOOK FOR SIGN DETAILS
4	Tennessee Scenic Parkway EAST 107 TN-22b M3-2 TN-6b M6-1	13	24" 24" 30" 21"	24" 12" 24" 15"									GREEN (REF.) BLACK BLACK BLACK	WHITE (REF.) WHITE (REF.) BLACK/ WHITE (REF.) WHITE (REF.)	0.080" SHEET ALUMINUM	P5	h = 13'-0"	TYPE 4 1'-0" DIA.	0.12 / 24.9	6'	P5 REQUIRES SLIP BASE ITEM NO. 713-11.21 SEE STD. DWG T-S-23A; INCLUDES STUB, SEE DETAIL D ON STD. DWG.
5 17	DISCOVER TENNESSEE SUNNYSIDE	13	21" 21"	48" 15"												P3	h = 14'-6" h = 14'-6"			6'	USE EXISTING SIGN FACES; SUPPORT LENGTHS ARE BASED ON ESTIMATED SIZES FOR EXISTING SIGNS; SIGN SIZES MUST BE FIELD VERIFIED PRIOR TO ORDERING SUPPORTS
6	EAST 107 TN-22a M3-2 TN-6b	13	24" 24" 30"	12" 12" 24"									GREEN (REF.) BLACK BLACK	WHITE (REF.) WHITE (REF.) BLACK/ WHITE (REF.)	0.080" SHEET ALUMINUM	P3	h = 13'-6"			6'	
7	BIKE ROUTE D11-1 M5-1R	13	24" 12"	18" 9"									WHITE (REF.)	GREEN (REF.)	0.080" SHEET ALUMINUM	P2	h = 12'-9"			6'	
8	← Rock Creek	13	72"	18"	2"	¾"	6"	4½"		D		SIGNCAD TYPE 2	WHITE (REF.)	BROWN (REF.)	0.100" SHEET ALUMINUM	P2	h_1 = 12'-3" h_2 = 12'-9"			7'	SEE THE DEPARTMENT'S CURRENT EDITION OF THE TENNESSEE SUPPLEMENT TO THE STANDARD HIGHWAY SIGNS BOOK FOR SIGN DETAILS
9	Tennessee Scenic Parkway WEST 107 TN-22b M3-4 TN-6b M6-1L	13	24" 24" 30" 21"	24" 12" 24" 15"									GREEN (REF.) BLACK BLACK BLACK	WHITE (REF.) WHITE (REF.) BLACK/ WHITE (REF.) WHITE (REF.)	0.080" SHEET ALUMINUM	P5	h = 13'-0"	TYPE 4 1'-0" DIA.	0.12 / 24.9	6'	P5 REQUIRES SLIP BASE ITEM NO. 713-11.21 SEE STD. DWG T-S-23A; INCLUDES STUB, SEE DETAIL D ON STD. DWG.
10	Tennessee Scenic Parkway WEST 173 TN-22b M3-4 TN-6b M6-1R	13	24" 24" 30" 21"	24" 12" 24" 15"									GREEN (REF.) BLACK BLACK BLACK	WHITE (REF.) WHITE (REF.) BLACK/ WHITE (REF.) WHITE (REF.)	0.080" SHEET ALUMINUM	P5	h = 13'-0"	TYPE 4 1'-0" DIA.	0.12 / 24.9	6'	P5 REQUIRES SLIP BASE ITEM NO. 713-11.21 SEE STD. DWG T-S-23A; INCLUDES STUB, SEE DETAIL D ON STD. DWG.
11	STOP CROSS TRAFFIC DOES NOT STOP R1-1 W4-4P	13	36" 24"	36" 12"									WHITE (REF.) BLACK	RED (REF.) YELLOW (REF.)	0.080" SHEET ALUMINUM	P5	h = 10'-3"	TYPE 4 1'-0" DIA.	0.12 / 24.9	6'	P5 REQUIRES SLIP BASE ITEM NO. 713-11.21 SEE STD. DWG T-S-23A; INCLUDES STUB, SEE DETAIL D ON STD. DWG. SUPPORT REQUIRES RETOREFLECTIVE MATERIAL, ITEM NO. 713-02.21, TO BE APPLIED PER SECTION 2A.21 OF THE CURRENT EDITION OF THE MUTCD
12	BIKE ROUTE D11-1 M5-1L	13	24" 12"	18" 9"									WHITE (REF.)	GREEN (REF.)	0.080" SHEET ALUMINUM	P2	h = 13'-0"			6'	

TYPE	YEAR	PROJECT NO.	SHEET NO.
PS&E	2024	BR-STP-107(28)	14

SEALED BY

07/31/2024

STATE OF TENNESSEE
DEPARTMENT OF TRANSPORTATION

SIGN SCHEDULE

31-JUL-2024 10:13
\\tdot01nas002.tdot.state.tn.us\01Shared\SURVDES\Design\PROJECTS\Unicoi SR 107\014-16 Sign Schedule.SHT

ALL SIGNS SHOWN WITH DESIGNATIONS ARE TO BE FABRICATED AS DETAILED IN THE CURRENT EDITION OF THE "MANUAL ON UNIFORM TRAFFIC CONTROL DEVICES" OR THE CURRENT EDITION OF THE "TENNESSEE SUPPLEMENT TO THE STANDARD HIGHWAY SIGNS BOOK"

CONCRETE AND STEEL QUANTITIES FOR FOOTINGS ARE PER EACH

SIGN NO	LEGEND	SHEET NO	SIZE				COPY				SHIELD	ARROW	SIGN FACE			STEEL DESIGN (BREAK-AWAY)					MINIMUM VERTICAL CLEARANCE	REMARKS
			LENGTH	HEIGHT	RADIUS	BORDER WIDTH	CAPITAL	LOWER CASE	NUMERAL	SERIES			COPY	BACKGROUND	MATERIAL	SUPPORT TYPE	SUPPORT LENGTH	FOOTING	CONC. CU. YD.	REIN STEEL LBS.		
13	TO INTERSTATE 26 M4-5 M1-1	13	24" 24"	12" 24"									WHITE (REF.) WHITE (REF.)	BLUE (REF.) RED/ BLUE (REF.)	0.080" SHEET ALUMINUM	P3	h = 15'-9"				6'	
14	WEST 173 TN-22a M3-4 TN-6b	13	24" 24" 30"	12" 12" 24"									GREEN (REF.) BLACK BLACK	WHITE (REF.) BLACK/ WHITE (REF.) WHITE (REF.)	0.080" SHEET ALUMINUM	P5	h = 13'-0"	TYPE 4 1'-0" DIA.	0.12	24.9	6'	P5 REQUIRES SLIP BASE ITEM NO. 713-11.21 SEE STD. DWG T-S-23A; INCLUDES STUB, SEE DETAIL D ON STD. DWG.
15	Tennessee Scenic Parkway WEST 107 TN-22b M3-4 TN-6b M6-3	13	24" 24" 30" 21"	24" 12" 24" 15"									GREEN (REF.) BLACK BLACK BLACK	WHITE (REF.) WHITE (REF.) BLACK/ WHITE (REF.) WHITE (REF.)	0.080" SHEET ALUMINUM	P5	h = 13'-0"	TYPE 4 1'-0" DIA.	0.12	24.9	6'	P5 REQUIRES SLIP BASE ITEM NO. 713-11.21 SEE STD. DWG T-S-23A; INCLUDES STUB, SEE DETAIL D ON STD. DWG.
16	Tennessee Scenic Parkway EAST 107 TN-22b M3-2 TN-6b M6-1L 1 TN-17a	13	24" 24" 30" 21" 6"	24" 12" 24" 15" 12"									GREEN (REF.) BLACK BLACK BLACK WHITE (REF.)	WHITE (REF.) WHITE (REF.) BLACK/ WHITE (REF.) WHITE (REF.) GREEN (REF.)	0.080" SHEET ALUMINUM	P5	h = 13'-0"	TYPE 4 1'-0" DIA.	0.12	24.9	6' 4'	P5 REQUIRES SLIP BASE ITEM NO. 713-11.21 SEE STD. DWG T-S-23A; INCLUDES STUB, SEE DETAIL D ON STD. DWG. FOR TN-17a SEE THE DEPARTMENT'S CURRENT EDITION OF THE TENNESSEE SUPPLEMENT TO THE STANDARD HIGHWAY SIGNS BOOK FOR SIGN DETAILS TO BE MOUNTED BACK-TO-BACK WITH TN-17a IN SIGN 24.
19	ALTERNATE INTERSTATE 26 M4-1 M1-1	13	24" 24"	12" 24"									WHITE (REF.) WHITE (REF.)	GREEN (REF.) RED/ BLUE (REF.)	0.080" SHEET ALUMINUM	P3	h = 15'-3"				6'	
20	WEST 107 TN-22a M3-4 TN-6b	13	24" 24" 30"	12" 12" 24"									GREEN (REF.) BLACK BLACK	WHITE (REF.) WHITE (REF.) BLACK/ WHITE (REF.)	0.080" SHEET ALUMINUM	P6	h = 18'-0"				6'	SLIP BASE NOT REQUIRED; SIGN LOCATED BEHING PARAPET WALL; STANDARD STUB LENGTH ADDED TO SUPPORT
21	W1-2R	13	30"	30"									BLACK	YELLOW (REF.)	0.080" SHEET ALUMINUM	P3	h = 14'-3"				7'	
22	ERWIN 5 D2-1	13	42"	18"	2"	¾"	6"	4½"	6"	D			GREEN (REF.)	WHITE (REF.)	0.080" SHEET ALUMINUM	P1	h_1= 10'-6" h_2= 10'-6"				7'	SEE THE DEPARTMENT'S CURRENT EDITION OF THE TENNESSEE SUPPLEMENT TO THE STANDARD HIGHWAY SIGNS BOOK FOR SIGN DETAILS
23	← Erwin Johnson City →	13	72"	36"	2"	¾"	6"	4½"		D		SIGNCAD TYPE 2	WHITE (REF.)	GREEN (REF.)	0.100" SHEET ALUMINUM	P3	h_1= 13'-0" h_2= 13'-0"				7'	SEE THE DEPARTMENT'S CURRENT EDITION OF THE TENNESSEE SUPPLEMENT TO THE STANDARD HIGHWAY SIGNS BOOK FOR SIGN DETAILS
24	1 173 TN-17a	13	6"	12"									WHITE (REF.)	GREEN (REF.)	0.080" SHEET ALUMINUM						4'	FOR TN-17a SEE THE DEPARTMENT'S CURRENT EDITION OF THE TENNESSEE SUPPLEMENT TO THE STANDARD HIGHWAY SIGNS BOOK FOR SIGN DETAILS TO BE MOUNTED BACK-TO-BACK WITH TN-17a ON SIGN 16.
25	TO EAST 173 M4-5 M3-2 TN-6b M5-1R	13	24" 24" 30" 21"	12" 12" 24" 15"									BLACK BLACK BLACK BLACK	WHITE (REF.) WHITE (REF.) BLACK/ WHITE (REF.) WHITE (REF.)	0.080" SHEET ALUMINUM	3"⊠ @ 4.83 #/FT.	h = 17'-6"				6'	SLIP BASE NOT REQUIRED; SIGN LOCATED BEHIND GUARDRAIL; ADD 4.27' TO SUPPORT LENGTH TO ACCOUNT FOR EMBEDMENT DEPTH
26	TO EAST 173 M4-5 M3-2 TN-6b M6-1	13	24" 24" 30" 21"	12" 12" 24" 15"									BLACK BLACK BLACK BLACK	WHITE (REF.) WHITE (REF.) BLACK/ WHITE (REF.) WHITE (REF.)	0.080" SHEET ALUMINUM	P5	h = 12'-0"	TYPE 4 1'-0" DIA.	0.12	24.9	6'	P5 REQUIRES SLIP BASE ITEM NO. 713-11.21 SEE STD. DWG T-S-23A; INCLUDES STUB, SEE DETAIL D ON STD. DWG.

TYPE	YEAR	PROJECT NO.	SHEET NO.
PS&E	2024	BR-STP-107(28)	15

SEALED BY

RANDY W. PLUMMER REGISTERED ENGINEER DEPT. OF AGRICULTURE COMMERCE & INS. 11378 STATE OF TENNESSEE

07/31/2024

STATE OF TENNESSEE DEPARTMENT OF TRANSPORTATION

SIGN SCHEDULE

31-JUL-2024 10:13
\\tdot01nas002.tdot.state.tn.us\01Shared\SURVDES\Design\PROJECTS\Unicoi SR 107\014-16 Sign Schedule.SHT

ALL SIGNS SHOWN WITH DESIGNATIONS ARE TO BE FABRICATED AS DETAILED IN THE CURRENT EDITION OF THE "MANUAL ON UNIFORM TRAFFIC CONTROL DEVICES" OR THE CURRENT EDITION OF THE "TENNESSEE SUPPLEMENT TO THE STANDARD HIGHWAY SIGNS BOOK"

CONCRETE AND STEEL QUANTITIES FOR FOOTINGS ARE PER EACH

TYPE	YEAR	PROJECT NO.	SHEET NO.
PS&E	2024	BR-STP-107(28)	16

SIGN NO	LEGEND	SHEET NO	SIZE				COPY				SHIELD	ARROW	SIGN FACE			STEEL DESIGN (BREAK-AWAY)					MINIMUM VERTICAL CLEARANCE	REMARKS
			LENGTH	HEIGHT	RADIUS	BORDER WIDTH	CAPITAL	LOWER CASE	NUMERAL	SERIES			COPY	BACKGROUND	MATERIAL	SUPPORT TYPE	SUPPORT LENGTH	FOOTING	CONC. CU. YD.	REIN STEEL LBS.		
27	TO M4-5 EAST M3-2 173 TN-6b	13	24" 24" 30"	12" 12" 24"									BLACK BLACK BLACK	WHITE (REF.) WHITE (REF.) BLACK/ WHITE (REF.)	0.080" SHEET ALUMINUM	P3	h = 13'-6"				6'	
28	TO M4-5 EAST M3-2 173 TN-6b M6-1L	13	24" 24" 30" 21"	12" 12" 24" 15"									BLACK BLACK BLACK BLACK	WHITE (REF.) WHITE (REF.) BLACK/ WHITE (REF.) WHITE (REF.)	0.080" SHEET ALUMINUM	P5	h = 12'-0"	TYPE 4 1'-0" DIA.	0.12	24.9	6'	P5 REQUIRES SLIP BASE ITEM NO. 713-11.21 SEE STD. DWG T-S-23A; INCLUDES STUB, SEE DETAIL D ON STD. DWG.

SEALED BY

RANDY W. PLUMMER
REGISTERED ENGINEER
DEPARTMENT OF AGRICULTURE
COMMERCE
No. 115781
STATE OF TENNESSEE

07/31/2024

STATE OF TENNESSEE
DEPARTMENT OF TRANSPORTATION

SIGN SCHEDULE

31-JUL-2024 10:13
\\tdot01nas002.tdot.state.tn.us\01Shared\SURVDES\Design\PROJECTS\Unicoi SR 107\014-16 Sign Schedule.SHT

TYPE	YEAR	PROJECT NO.	SHEET NO.
R.O.W.	2020	BR-STP-107(28)	12
PS&E	2024	BR-STP-107(28)	17

REV. 02/23/22: UPDATED PROPOSED R.O.W. LINES.

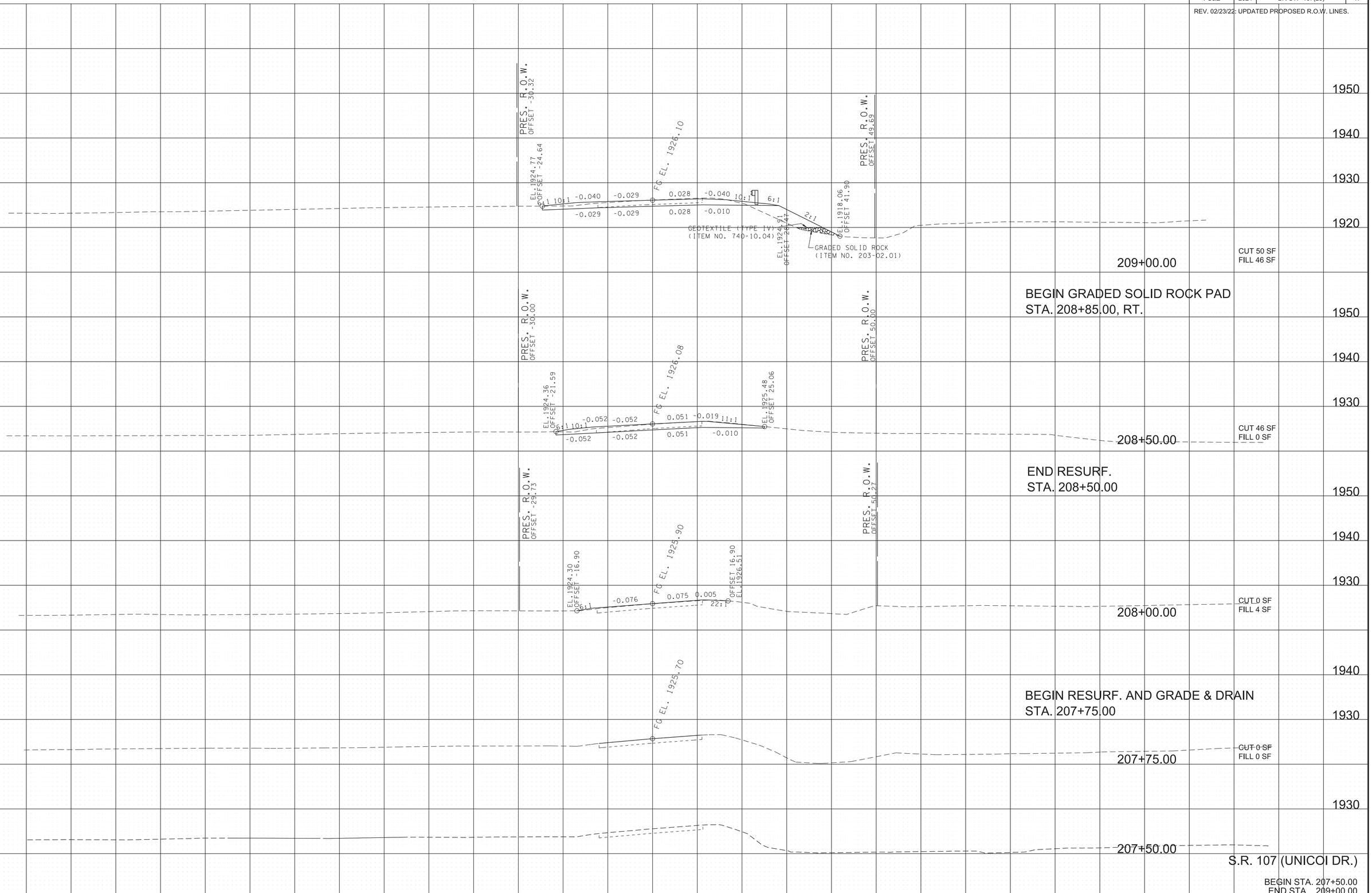

31-JUL-2024 10:13
\\tdot01nas002.tdot.state.tn.us\01Shared\SURVDES\Design\PROJECTS\Unicoi SR 107\017SHEETS-MainlineXSections.sht

TYPE	YEAR	PROJECT NO.	SHEET NO.
R.O.W.	2020	BR-STP-107(28)	13
PS&E	2024	BR-STP-107(28)	18

REV. 02/23/22: UPDATED PROPOSED R.O.W. LINES.

BEGIN SPECIAL DITCH, LT.
STA. 209+75.00

S.R. 107 (UNICOI DR.)

BEGIN STA. 209+39.09
END STA. 209+58.27

31-JUL-2024 10:13
\\tdot01nas002.tdot.state.tn.us\01Shared\SURVDES\Design\PROJECTS\Unicoi SR 107\017SHEETS-MainlineXSections.sht

TYPE	YEAR	PROJECT NO.	SHEET NO.
R.O.W.	2020	BR-STP-107(28)	14
PS&E	2024	BR-STP-107(28)	19

REV. 02/23/22: UPDATED PROPOSED R.O.W. LINES AND PROPOSED GRADED SOLID ROCK PAD LIMITS.

END GRADED SOLID ROCK PAD
STA. 210+30.00, RT.

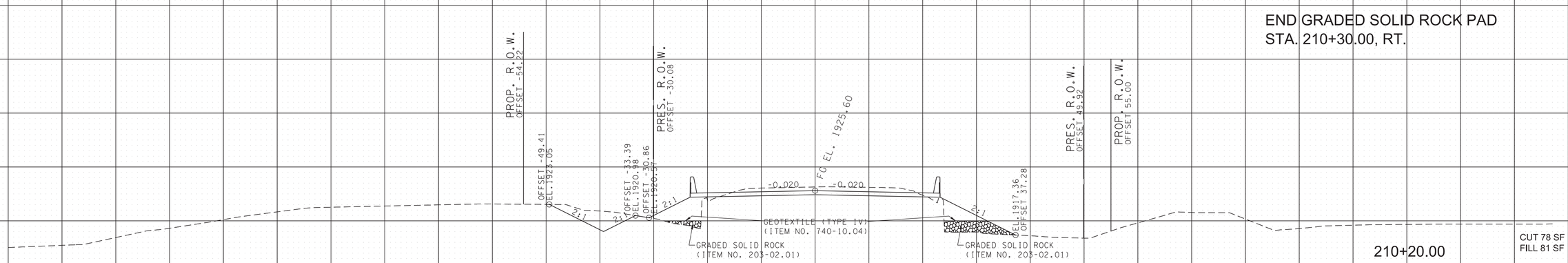

210+20.00

CUT 78 SF
FILL 81 SF

END SPECIAL DITCH, LT.
BEGIN INDEPENDENT DITCH, LT.
STA. 210+15.00

BEGIN BRIDGE
STA. 210+20.00

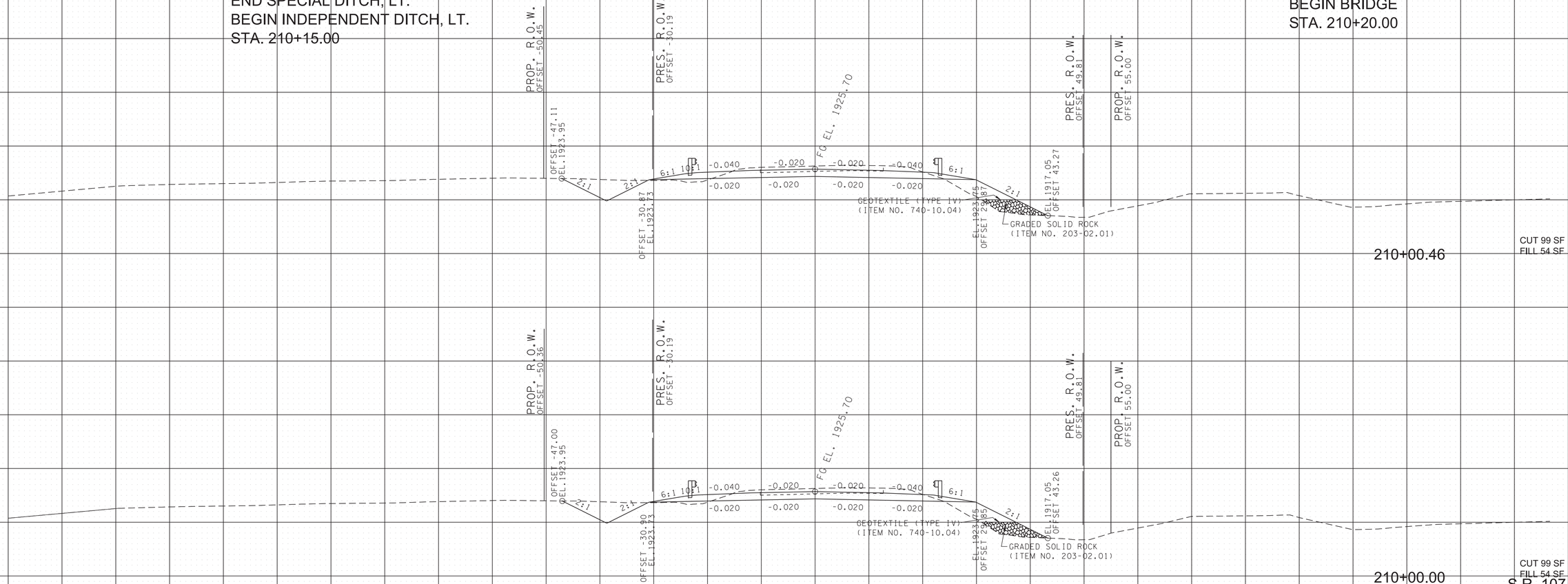

210+00.46

CUT 99 SF
FILL 54 SF

210+00.00

CUT 99 SF
FILL 54 SF

S.R. 107 (UNICOI DR.)

BEGIN STA. 210+00.00
END STA. 210+20.00

140 120 100 80 60 40 20 0 20 40 60 80 100 120 140

31-JUL-2024 10:13
\\tdot01nas002.tdot.state.tn.us\01Shared\SURVDES\Design\PROJECTS\Unicoi SR 107\017SHEETS-MainlineXSections.sht

TYPE	YEAR	PROJECT NO.	SHEET NO.
R.O.W.	2020	BR-STP-107(28)	15
PS&E	2024	BR-STP-107(28)	20

REV. 02/23/22: UPDATED PROPOSED GRADED SOLID ROCK PAD LIMITS.

END GRADED SOLID ROCK PAD
STA. 211+97.00, RT

211+50.00

CUT 0 SF
FILL 162 SF

PROP. R.O.W. OFFSET -47.62
PRES. R.O.W. OFFSET -29.63
PRES. R.O.W. OFFSET 50.37
OFFSET -38.62 EL.1917.28
EL.1917.28 OFFSET -29.23
FG EL. 1924.95
-0.020 -0.020 -0.020 -0.020
2:1
EL.1923.90 OFFSET 26.53
OFFSET 24.23 EL.1923.28
GEOTEXTILE (TYPE IV) (ITEM NO. 740-10.04)
GRADED SOLID ROCK (ITEM NO. 203-02.01)

END BRIDGE
STA. 211+40.00

211+40.00

CUT 0 SF
FILL 170 SF

PROP. R.O.W. OFFSET -50.00
PRES. R.O.W. OFFSET -29.61
PRES. R.O.W. OFFSET 50.39
OFFSET -36.32 EL.1917.24
FG EL. 1925.00
-0.020 -0.020
2:1
EL.1922.14 OFFSET 26.52
GEOTEXTILE (TYPE IV) (ITEM NO. 740-10.04)
GRADED SOLID ROCK (ITEM NO. 203-02.01)

BEGIN GRADED SOLID ROCK PAD
STA. 211+26.00, RT/LT

BEGIN INDEPENDENT DITCH, RT.
STA. 211+20.00

211+00.00

CUT 9 SF
FILL 0 SF

PROP. R.O.W. OFFSET -59.53
PRES. R.O.W. OFFSET -29.64
PRES. R.O.W. OFFSET 50.36
PROP. R.O.W. OFFSET 50.36
FG EL. 1925.20
-0.020 -0.020
EL. 1915.08 OFFSET 28.73
EL. 1915.49 OFFSET 42.91
4:1 4:1

END INDEPENDENT DITCH, LT.
STA. 210+58.65

END INDEPENDENT DITCH, RT.
STA. 210+91.42

210+50.00

CUT 3 SF
FILL 0 SF

PROP. R.O.W. OFFSET -60.00
PRES. R.O.W. OFFSET -29.92
PRES. R.O.W. OFFSET 50.09
PROP. R.O.W. OFFSET 55.00
FG EL. 1925.45
-0.020 -0.020
OFFSET -39.04 EL.1915.04
OFFSET -32.58 EL.1915.20
2:1

S.R. 107 (UNICOI DR.)

BEGIN STA. 210+50.00
END STA. 211+50.00

1950 1940 1930 1920 1910

140 120 100 80 60 40 20 0 20 40 60 80 100 120 140

31-JUL-2024 10:13
\\tdot01nas002.tdot.state.tn.us\01Shared\SURVDES\Design\PROJECTS\Unicoi SR 107\017SHEETS-MainlineXSections.sht

TYPE	YEAR	PROJECT NO.	SHEET NO.
R.O.W.	2020	BR-STP-107(28)	16
PS&E	2024	BR-STP-107(28)	21

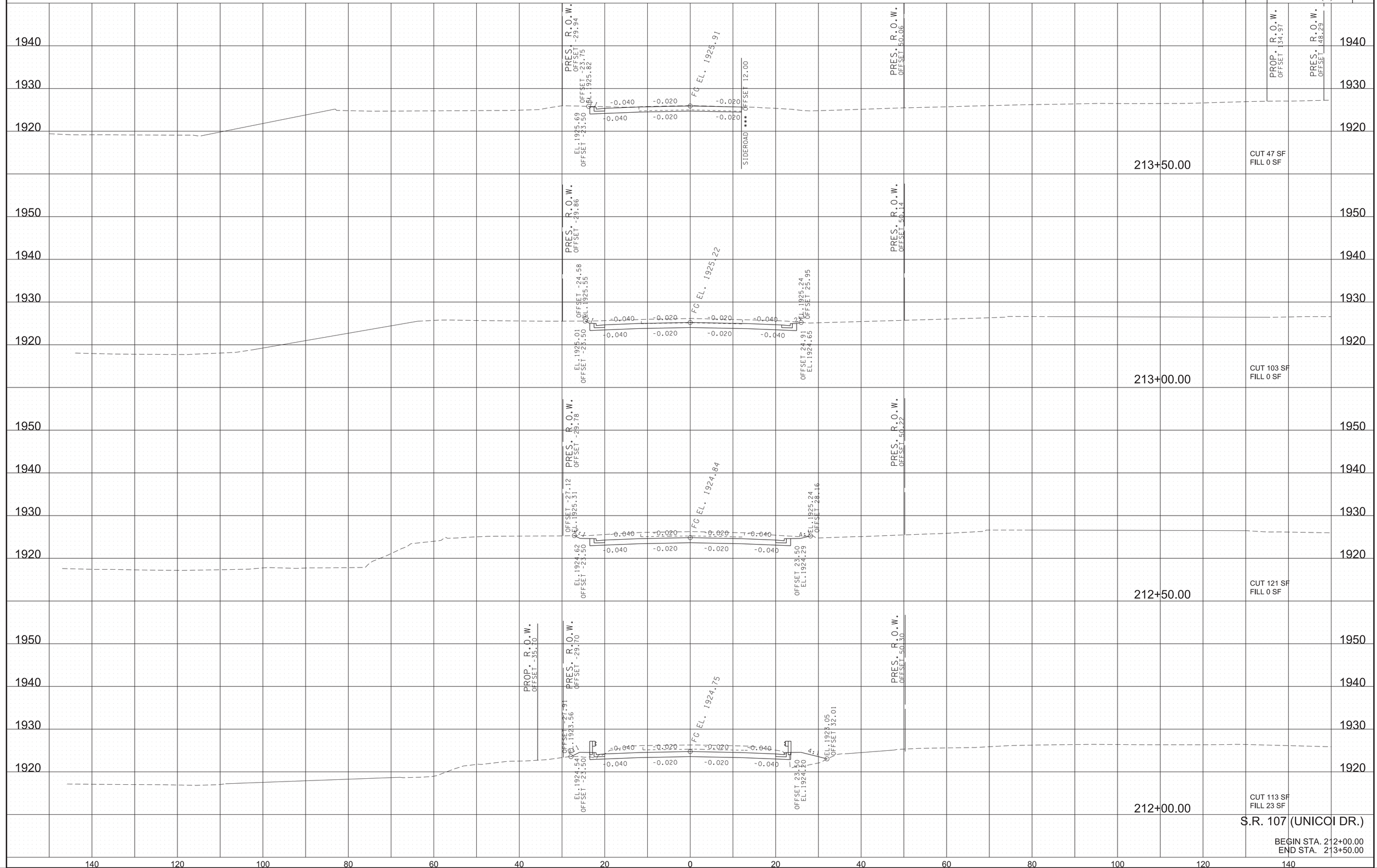

31-JUL-2024 10:13
\\tdot01nas002.tdot.state.tn.us\01Shared\SURVDES\Design\PROJECTS\Unicoi SR 107\017SHEETS-MainlineXSections.sht

TYPE	YEAR	PROJECT NO.	SHEET NO.
R.O.W.	2020	BR-STP-107(28)	17
PS&E	2024	BR-STP-107(28)	22

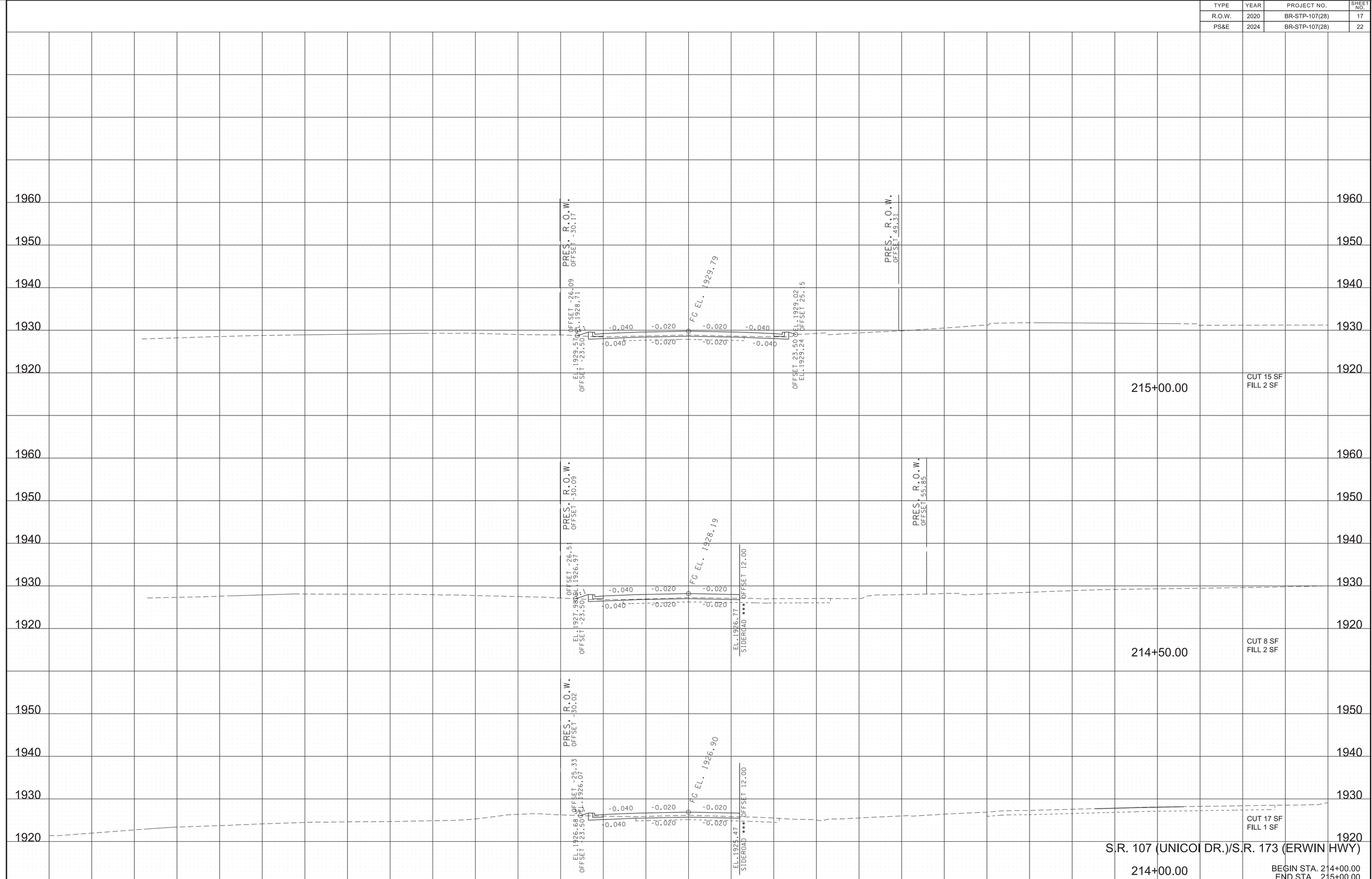

31-JUL-2024 10:13
\\tdot01nas002.tdot.state.tn.us\01Shared\SURVDES\Design\PROJECTS\Unicoi SR 107\017SHEETS-MainlineXSections.sht

TYPE	YEAR	PROJECT NO.	SHEET NO.
R.O.W.	2020	BR-STP-107(28)	18
PS&E	2024	BR-STP-107(28)	23

31-JUL-2024 10:13
\\tdot01nas002.tdot.state.tn.us\01Shared\SURVDES\Design\PROJECTS\Unicoi SR 107\017SHEETS-MainlineXSections.sht

1970 1960 1950 1940 1930 1920

PRES. R.O.W. OFFSET -30.41

PRES. R.O.W. OFFSET 29.54

FG EL. 1936.44

END RESURF.
STA. 216+50.00

PRES. R.O.W. OFFSET 14.70

216+50.00

PRES. R.O.W. OFFSET -30.33

PRES. R.O.W. OFFSET -26.78
EL. 1938.27

FG EL. 1933.89

PRES. R.O.W. OFFSET 29.58

EL. 1932.98
OFFSET -26.78
EL. 1933.02
OFFSET 25.26
OFFSET 25.26
EL. 1931.83

-0.040 -0.020 -0.020 -0.040
-0.040 -0.020 -0.020 -0.040

END GRADE & DRAIN/BEGIN RESURF.
STA. 216+25.00

PRES. R.O.W. OFFSET 13.58

216+00.00

CUT 52 SF
FILL 0 SF

PRES. R.O.W. OFFSET -30.25

PRES. R.O.W. OFFSET -25.72
EL. 1930.73

FG EL. 1931.69

PRES. R.O.W. OFFSET 29.63

EL. 1931.40
OFFSET -23.50
EL. 1930.36
OFFSET 23.50
OFFSET 25.73
EL. 1931.11

-0.040 -0.020 -0.020 -0.040
-0.040 -0.020 -0.020 -0.040

CUT 29 SF
FILL 2 SF

215+50.00

S.R. 173 (ERWIN HWY)

BEGIN STA. 215+50.00
END STA. 216+50.00

140 120 100 80 60 40 20 0 20 40 60 80 100 120 140

TYPE	YEAR	PROJECT NO.	SHEET NO.
R.O.W.	2020	BR-STP-107(28)	12
PS&E	2024	BR-STP-107(28)	24

REV. 02/23/22: UPDATED SUPER ELEVATION AND PROPOSED ROADWAY TIE POINTS.

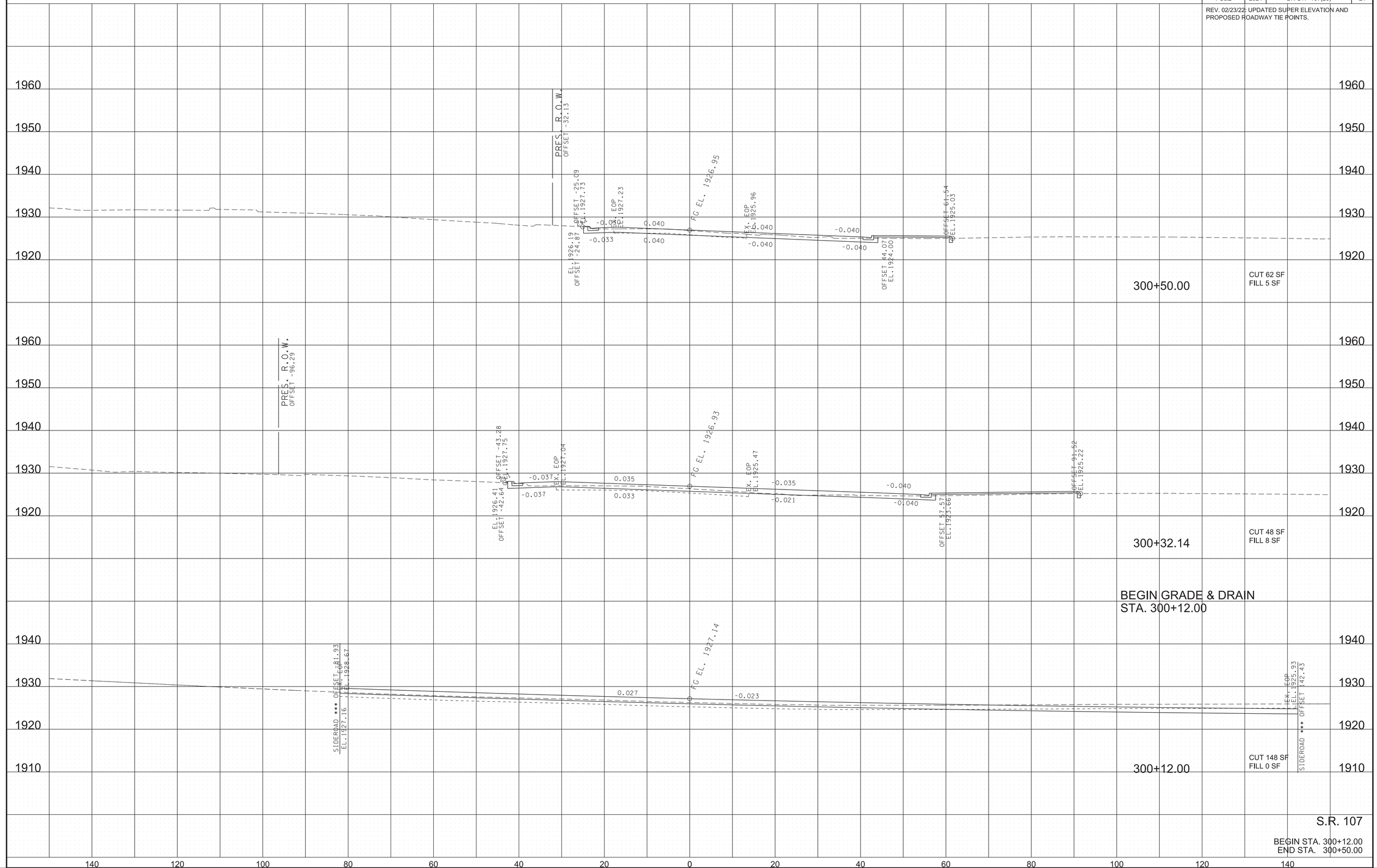

31-JUL-2024 10:14
\\tdot01nas002.tdot.state.tn.us\01Shared\SURVDES\Design\PROJECTS\Unicoi SR 107\024SHEETS-SideroadXSections.sht

TYPE	YEAR	PROJECT NO.	SHEET NO.
R.O.W.	2020	BR-STP-107(28)	13
PS&E	2024	BR-STP-107(28)	25

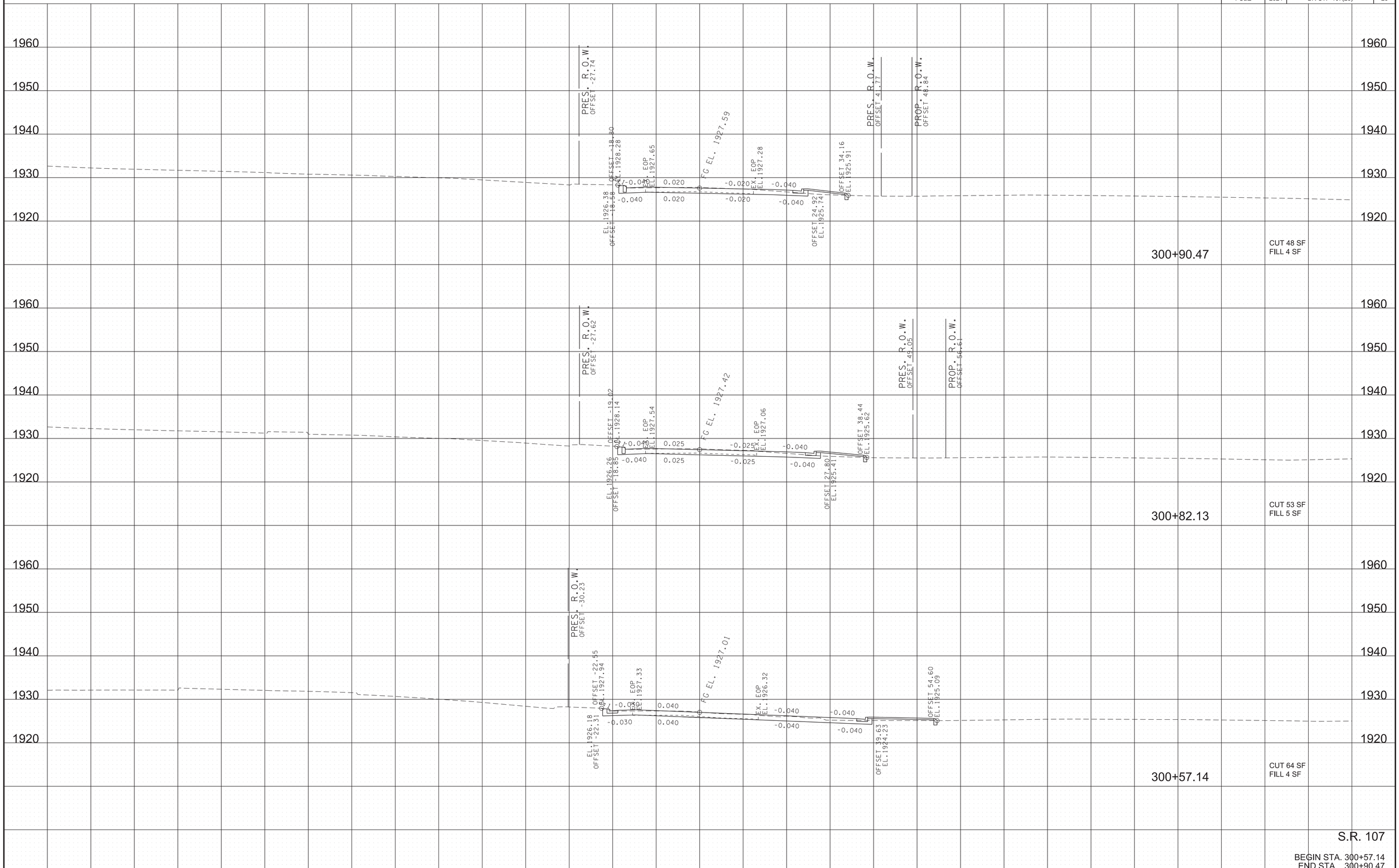

S.R. 107

BEGIN STA. 300+57.14
END STA. 300+90.47

31-JUL-2024 10:14
\\tdot01nas002.tdot.state.tn.us\01Shared\SURVDES\Design\PROJECTS\Unicoi SR 107\024SHEETS-SideroadXSections.sht

TYPE	YEAR	PROJECT NO.	SHEET NO.
R.O.W.	2020	BR-STP-107(28)	14
PS&E	2024	BR-STP-107(28)	26

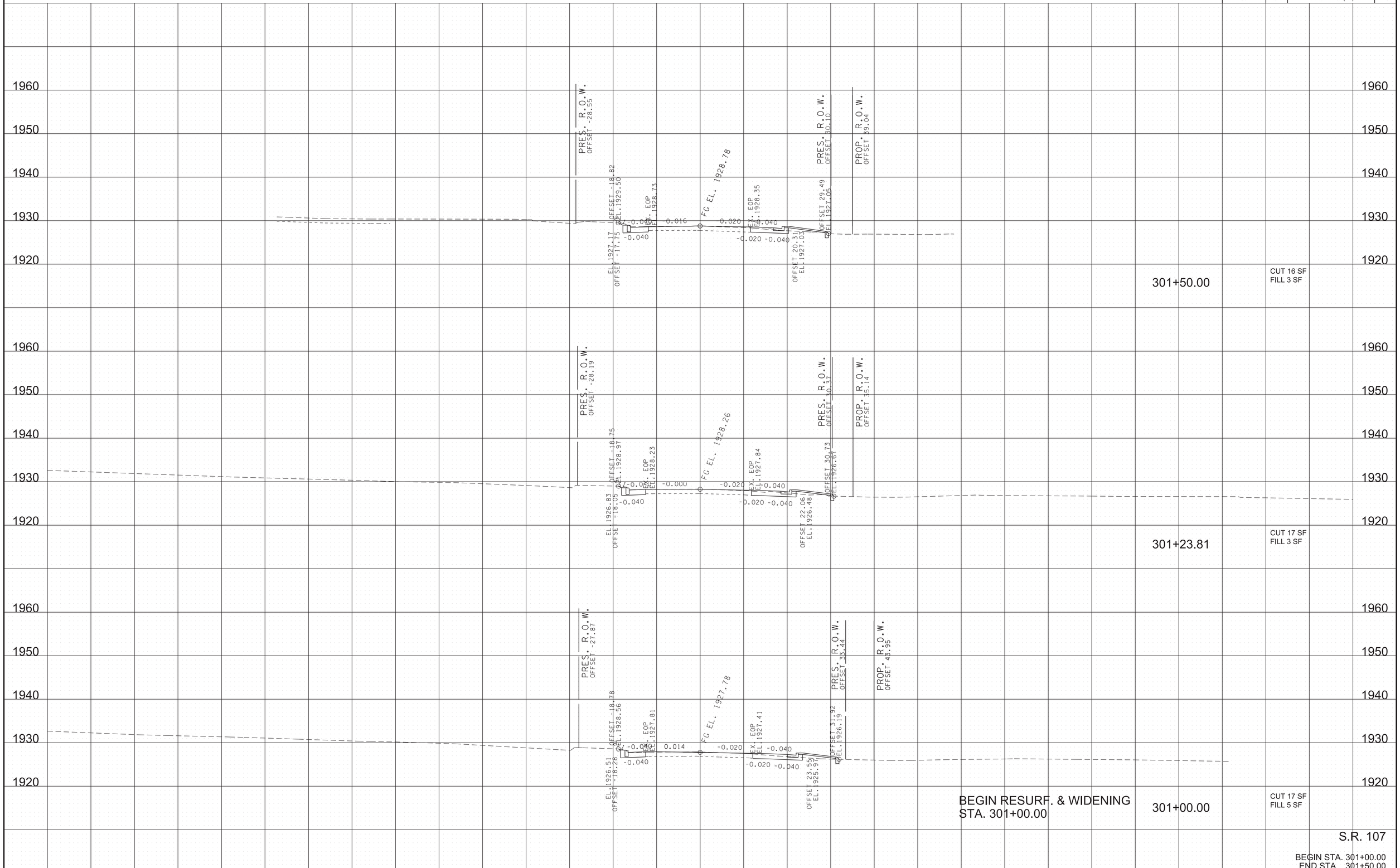

31-JUL-2024 10:14
\\tdot01nas002.tdot.state.tn.us\01Shared\SURVDES\Design\PROJECTS\Unicoi SR 107\024SHEETS-SideroadXSections.sht

TYPE	YEAR	PROJECT NO.	SHEET NO.
R.O.W.	2020	BR-STP-107(28)	15
PS&E	2024	BR-STP-107(28)	27

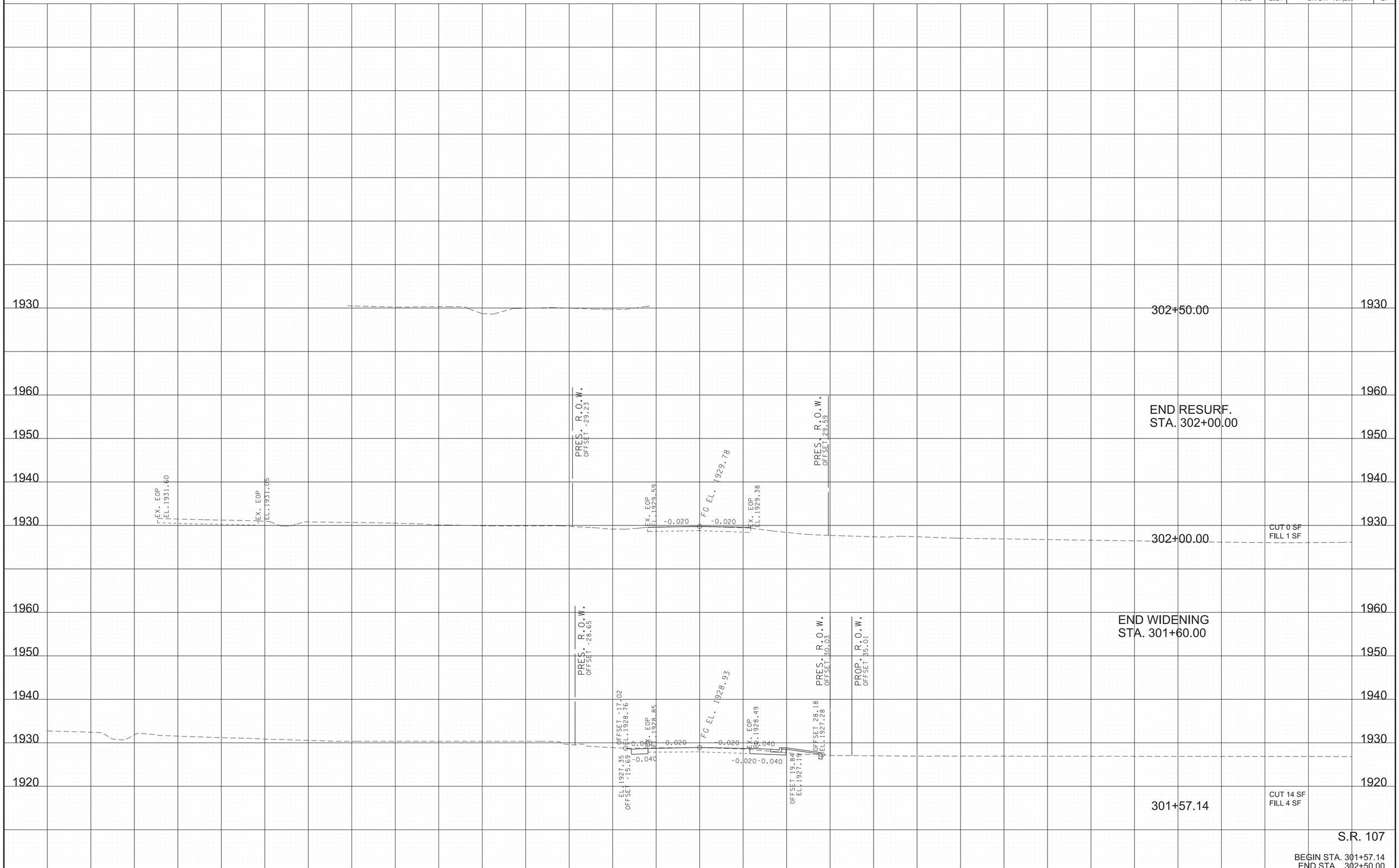

31-JUL-2024 10:14
\\tdot01nas002.tdot.state.tn.us\01Shared\SURVDES\Design\PROJECTS\Unicoi SR 107\024SHEETS-SideroadXSections.sht

TYPE	YEAR	PROJECT NO.	SHEET NO.
PS&E	2024	BR-STP-107(28)	T1

PAVEMENT EDGE DROP-OFF TRAFFIC CONTROL NOTES

A. DIFFERENCES IN ELEVATION BETWEEN ADJACENT TRAFFIC LANES OR TRAFFIC LANE AND SHOULDER WHERE THE TRAFFIC LANE IS BEING USED BY TRAFFIC, CAUSED BY BASE, PAVING OR RESURFACING:

1. DIFFERENCES IN ELEVATION BETWEEN ADJACENT ROADWAY ELEMENTS GREATER THAN 0.75 INCH AND NOT EXCEEDING 1.75 INCHES:

   a. WARNING SIGNS, UNEVEN LANES (W8-11) AND/OR SHOULDER DROP-OFF WITH PLAQUE (W8-17 AND W8-17P), SHALL BE PLACED IN ADVANCE OF AND THROUGHOUT THE EXPOSED AREA. MAXIMUM SPACING BETWEEN SIGNS SHALL BE 2,000 FEET WITH A MINIMUM OF 2 SIGNS PER EXPOSED AREA. WHERE UNEVEN PAVEMENT IS ENCOUNTERED, SIGNS SHALL BE PLACED ON EACH SIDE OF THE ROADWAY.

   b. DIFFERENCES IN ELEVATION BETWEEN ADJACENT TRAFFIC LANES BEING UTILIZED BY TRAFFIC CAUSED BY ADDED PAVEMENT SHALL BE ELIMINATED WITHIN THREE WORKDAYS.

   c. DIFFERENCES IN ELEVATION BETWEEN ADJACENT TRAFFIC LANES BEING UTILIZED BY TRAFFIC CAUSED BY COLD PLANING SHALL BE ELIMINATED WITHIN THREE WORKDAYS.

   d. WHEN THE DIFFERENCE IN ELEVATION IS BETWEEN THE TRAFFIC LANE BEING UTILIZED BY TRAFFIC AND SHOULDER THE DIFFERENCE IN ELEVATION SHALL BE ELIMINATED WITHIN SEVEN WORKDAYS AFTER THE CONDITION IS CREATED.

2. DIFFERENCES IN ELEVATION BETWEEN ADJACENT ROADWAY ELEMENTS GREATER THAN 1.75 INCHES AND NOT EXCEEDING 6 INCHES, TRAFFIC IS NOT TO BE ALLOWED TO TRAVERSE THIS DIFFERENCE IN ELEVATION.

   a. SEPARATION SHALL BE ACCOMPLISHED BY DRUMS, BARRICADES OR OTHER APPROVED DEVICES IN ACCORDANCE WITH THE FOLLOWING:

      (1) WHERE POSTED SPEEDS ARE 50 MPH OR GREATER, SPACING OF THE PROTECTIVE DEVICES SHALL NOT EXCEED 100 FEET.

      (2) WHERE POSTED SPEEDS ARE LESS THAN 50 MPH, THE MAXIMUM SPACING OF THE PROTECTIVE DEVICES IN FEET SHALL NOT EXCEED TWICE THE POSTED SPEED IN MILES PER HOUR OR 50 FEET, WHICHEVER SPACING IS GREATER.

   b. IF THE DIFFERENCE IN ELEVATION IS ELIMINATED OR DECREASED TO 2 INCHES OR LESS BY THE END OF EACH WORKDAY, CONES MAY BE USED DURING DAYLIGHT HOURS IN LIEU OF DRUMS, BARRICADES OR OTHER APPROVED PROTECTIVE DEVICES MENTIONED IN PARAGRAPH a, PROVIDED WARNING SIGNS ARE ERECTED. WARNING SIGNS (UNEVEN LANES AND/OR SHOULDER DROP-OFF) SHALL BE PLACED IN ADVANCE OF AND THROUGHOUT THE EXPOSED AREA. MAXIMUM SPACING BETWEEN SIGNS SHALL BE 2,000 FEET WITH A MINIMUM OF 2 SIGNS PER EXPOSED AREA. WHERE UNEVEN PAVEMENT IS ENCOUNTERED, SIGNS SHALL BE PLACED ON EACH SIDE OF THE ROADWAY.

   c. WHEN THE DIFFERENCE IN ELEVATION IS BETWEEN THE THROUGH TRAFFIC LANE AND THE SHOULDER AND THE ELEVATION DIFFERENCE IS LESS THAN 3 INCHES, THE CONTRACTOR MAY USE WARNING SIGNS AND/OR PROTECTIVE DEVICES AS APPLICABLE AND APPROVED BY THE ENGINEER. SEE PARAGRAPH a REGARDING USE OF DRUMS, BARRICADES OR OTHER APPROVED PROTECTIVE DEVICES. WARNING SIGNS (UNEVEN LANES AND/OR SHOULDER DROP-OFF) WILL BE PLACED IN ADVANCE OF AND THROUGHOUT THE EXPOSED AREA. MAXIMUM SPACING BETWEEN SIGNS SHALL BE 2,000 FEET WITH A MINIMUM OF 2 SIGNS PER EXPOSED AREA. WHERE UNEVEN PAVEMENT IS ENCOUNTERED, SIGNS SHALL BE PLACED ON EACH SIDE OF THE ROADWAY.

   IN THESE SITUATIONS, THE CONTRACTOR SHALL LIMIT HIS OPERATIONS TO ONE WORK ZONE NOT EXCEEDING 2 MILES IN LENGTH UNLESS OTHERWISE NOTED ON THE PLANS OR APPROVED BY THE ENGINEER. ONCE THE CONTRACTOR BEGINS WORK IN A WORK ZONE, A CONTINUOUS OPERATION SHALL BE MAINTAINED UNTIL THE DIFFERENCE IN ELEVATION IS ELIMINATED. SIMULTANEOUS WORK ON SEPARATE ROADWAYS OF DIVIDED HIGHWAYS WILL BE CONSIDERED INDEPENDENTLY IN REGARD TO RESTRICTION OF WORK ZONE ACTIVITY.

3. DIFFERENCES IN ELEVATION BETWEEN ADJACENT ROADWAY ELEMENTS GREATER THAN 6 INCHES BUT NOT EXCEEDING 18 INCHES, THE CONTRACTOR, WITH THE ENGINEER'S APPROVAL, MAY UTILIZE ONE OF THE FOLLOWING:

   a. THE CONTRACTOR SHALL ACCOMPLISH SEPARATION BY DRUMS, BARRICADES OR OTHER APPROVED DEVICES IN ACCORDANCE WITH THE FOLLOWING:

      (1) WHERE POSTED SPEEDS ARE 50 MPH OR GREATER, SPACING OF THE PROTECTIVE DEVICES SHALL NOT EXCEED 100 FEET.

      (2) WHERE POSTED SPEEDS ARE LESS THAN 50 MPH, THE MAXIMUM SPACING OF THE PROTECTIVE DEVICES IN FEET SHALL NOT EXCEED TWICE THE POSTED SPEED IN MILES PER HOUR OR 50 FEET, WHICHEVER SPACING IS GREATER.

   IN ORDER TO USE THIS METHOD, THE CONTRACTOR MUST REDUCE THE DIFFERENCE IN ELEVATION TO 6 INCHES OR LESS BY THE END OF THE WORKDAY THAT THE CONDITION IS CREATED.

   b. THE CONTRACTOR SHALL PROVIDE DRUMS, BARRICADES OR OTHER APPROVED SEPARATION DEVICES AS SPECIFIED IN PARAGRAPH a, AND CONSTRUCT A STONE WEDGE WITH A 4:1 SLOPE, OR FLATTER, TO ELIMINATE THE VERTICAL OFFSET IF THE LOWER ELEVATION IS AT OR BELOW SUBGRADE AT THE END OF EACH DAY.

   c. THE CONTRACTOR SHALL PROVIDE DRUMS, BARRICADES OR OTHER APPROVED SEPARATION DEVICES AS SPECIFIED IN PARAGRAPH a AND IF THE LOWER ELEVATION IS BASE STONE OR ASPHALT PAVEMENT, PLACEMENT OF SUBSEQUENT LAYERS OF PAVEMENT MUST BEGIN THE NEXT WORK DAY AND PROGRESS CONTINUOUSLY UNTIL THE DIFFERENCE IN ELEVATION IS ELIMINATED OR REDUCED TO SIX INCHES OR LESS.

   d. THE CONTRACTOR SHALL PROVIDE SEPARATION BY PORTABLE BARRIER RAIL.

   FOR PRECEDING CONDITIONS a, b, AND c, THE CONTRACTOR SHALL USE THE SHOULDER DROP-OFF WARNING SIGN WITH PLAQUE (W8-17 AND W8-17P). IT SHALL BE PLACED IN ADVANCE OF AND THROUGHOUT THE EXPOSED AREA. MAXIMUM SPACING BETWEEN THE SIGNS SHALL BE 2,000 FEET WITH A MINIMUM OF 2 SIGNS PER EXPOSED AREA. IN THESE SITUATIONS, THE CONTRACTOR SHALL LIMIT HIS OPERATIONS TO ONE WORK ZONE NOT EXCEEDING 1 MILE IN LENGTH UNLESS OTHERWISE NOTED ON THE PLANS OR APPROVED BY THE ENGINEER. ONCE THE CONTRACTOR BEGINS WORK IN A WORK ZONE, A CONTINUOUS OPERATION SHALL BE MAINTAINED UNTIL THE DIFFERENCE IS ELIMINATED. SIMULTANEOUS WORK ON SEPARATE ROADWAYS OF DIVIDED HIGHWAYS WILL BE CONSIDERED INDEPENDENTLY IN REGARD TO RESTRICTION OF WORK ZONE ACTIVITY.

4. FOR DIFFERENCES IN ELEVATION BETWEEN ADJACENT ROADWAY ELEMENTS GREATER THAN 18 INCHES.

   SEPARATION WILL BE PROVIDED BY USE OF PORTABLE BARRIER RAIL.

   IN THIS SITUATION THE CONTRACTOR SHALL LIMIT HIS OPERATIONS TO ONE WORK ZONE NOT EXCEEDING 1 MILE IN LENGTH UNLESS OTHERWISE NOTED ON THE PLANS OR APPROVED BY THE ENGINEER. ONCE THE CONTRACTOR BEGINS WORK IN A WORK ZONE, A CONTINUOUS OPERATION SHALL BE MAINTAINED UNTIL THE DIFFERENCE IN ELEVATION IS ELIMINATED. SIMULTANEOUS WORK ON SEPARATE ROADWAYS OF DIVIDED HIGHWAYS WILL BE CONSIDERED INDEPENDENTLY IN REGARD TO RESTRICTION OF WORK ZONE ACTIVITY.

B. IF THE DIFFERENCE IN ELEVATION IS WITHIN 30 FEET OF THE NEAREST TRAFFIC LANE BEING USED BY TRAFFIC CAUSED BY GRADING, EXCAVATION FOR UTILITIES, DRAINAGE STRUCTURES, UNDERCUTTING, ETC.:

1. IF THE DIFFERENCE IN ELEVATION IS WITHIN 8 FEET OF THE NEAREST TRAFFIC LANE WITH DIFFERENCE IN ELEVATION GREATER THAN 3/4 INCH AND NOT EXCEEDING 2 INCHES.

   a. WARNING SIGNS (UNEVEN LANES AND/OR SHOULDER DROP-OFF) SHALL BE PLACED IN ADVANCE OF AND THROUGHOUT THE EXPOSED AREA. MAXIMUM SPACING BETWEEN SIGNS SHALL BE 2,000 FEET WITH A MINIMUM OF 2 SIGNS PER EXPOSED AREA. WHERE UNEVEN PAVEMENT IS ENCOUNTERED, SIGNS SHALL BE PLACED ON EACH SIDE OF THE ROADWAY.

2. IF THE DIFFERENCE IN ELEVATION IS WITHIN 8 FEET OF THE NEAREST TRAFFIC LANE WITH DIFFERENCE IN ELEVATION GREATER THAN 2 INCHES AND NOT EXCEEDING 6 INCHES:

   a. SEPARATION SHALL BE ACCOMPLISHED BY DRUMS, BARRICADES OR OTHER APPROVED DEVICES IN ACCORDANCE WITH THE FOLLOWING:

      (1) WHERE POSTED SPEEDS ARE 50 MPH OR GREATER, SPACING OF THE PROTECTIVE DEVICES SHALL NOT EXCEED 100 FEET.

      (2) WHERE POSTED SPEEDS ARE LESS THAN 50 MPH THE MAXIMUM SPACING OF THE PROTECTIVE DEVICES IN FEET SHALL NOT EXCEED TWICE THE POSTED SPEED IN MILES PER HOUR OR 50 FEET, WHICHEVER SPACING IS GREATER.

3. IF THE DIFFERENCE IN ELEVATION IS WITHIN 8 FEET OF THE NEAREST TRAFFIC LANE WITH DIFFERENCE IN ELEVATION GREATER THAN 6 INCHES:

   a. SEPARATION SHALL BE ACCOMPLISHED BY DRUMS, BARRICADES OR OTHER APPROVED DEVICES IN ACCORDANCE WITH THE FOLLOWING:

      (1) WHERE POSTED SPEEDS ARE 50 MPH OR GREATER, SPACING OF THE PROTECTIVE DEVICES SHALL NOT EXCEED 100 FEET.

      (2) WHERE POSTED SPEEDS ARE LESS THAN 50 MPH THE MAXIMUM SPACING OF THE PROTECTIVE DEVICES IN FEET SHALL NOT EXCEED TWICE THE POSTED SPEED IN MILES PER HOUR OR 50 FEET, WHICHEVER SPACING IS GREATER.

   b. ELIMINATE VERTICAL OFFSET BY CONSTRUCTING A STONE WEDGE OR GRADING TO A 4:1 SLOPE, OR FLATTER, OR USE PORTABLE BARRIER RAIL.

   THE CONTRACTOR SHALL SCHEDULE THE WORK SO AS TO MINIMIZE THE TIME TRAFFIC IS EXPOSED TO AN ELEVATION DIFFERENCE. ONCE THE CONTRACTOR BEGINS AN ACTIVITY THAT CREATES AN ELEVATION DIFFERENCE WITHIN 8 FEET OF A TRAFFIC LANE, THE ACTIVITY SHALL BE PURSUED AS A CONTINUOUS OPERATION UNTIL THE ELEVATION DIFFERENCE IS ELIMINATED.

C. IF THE DIFFERENCE IN ELEVATION IS FARTHER THAN 8 FEET FROM THE NEAREST TRAFFIC LANE BUT NOT MORE THAN 30 FEET FROM THE NEAREST TRAFFIC LANE:

SEPARATION SHALL BE ACCOMPLISHED BY DRUMS, BARRICADES OR OTHER APPROVED DEVICES IN ACCORDANCE WITH THE FOLLOWING:

1. WHERE POSTED SPEEDS ARE 50 MPH OR GREATER, SPACING OF THE PROTECTIVE DEVICES SHALL NOT EXCEED 100 FEET.

2. WHERE POSTED SPEEDS ARE LESS THAN 50 MPH, THE MAXIMUM SPACING OF THE PROTECTIVE DEVICES IN FEET SHALL NOT EXCEED TWICE THE POSTED SPEED IN MILES PER HOUR OR 50 FEET, WHICHEVER SPACING IS GREATER.

THE CONTRACTOR SHALL SCHEDULE THE WORK SO AS TO MINIMIZE THE TIME TRAFFIC IS EXPOSED TO AN ELEVATION DIFFERENCE. ONCE THE CONTRACTOR BEGINS AN ACTIVITY THAT CREATES AN ELEVATION DIFFERENCE, THE ACTIVITY SHALL BE PURSUED AS A CONTINUOUS OPERATION UNTIL THE ELEVATION DIFFERENCE IS ELIMINATED.

SEALED BY

JAMES B. MORGAN
REGISTERED ENGINEER
AGRICULTURE
COMMERCE
No. 111658
STATE OF TENNESSEE

07/31/2024

STATE OF TENNESSEE
DEPARTMENT OF TRANSPORTATION

PAVEMENT EDGE DROP-OFF NOTES FOR TRAFFIC CONTROL

31-JUL-2024 10:14
\\tdot01nas002.idot.state.tn.us\01Shared\SURVDES\Design\PROJECTS\Unicoi SR 107\00T1.sht

TABULATED TRAFFIC CONTROL QUANTITIES

ITEM NO.	DESCRIPTION	UNIT	QUANTITY 86006-3235-94
203-50	CONSTRUCTION OF HAUL ROAD	LS	1
303-01	MINERAL AGGREGATE, TYPE A BASE, GRADING D	TON	200
712-01	TRAFFIC CONTROL	LS	1
712-02.12	PORTABLE BARRIER RAIL, REDUCED DEFLECTION (MASH TL-3)	L.F.	465
712-02.60	TEMPORARY WORK ZONE CRASH CUSHION (MASH TL-3)	EACH	6
712-04.01	FLEXIBLE DRUMS (CHANNELIZING)	EACH	100
712-04.50	BARRIER RAIL DELINEATOR	EACH	10
712-05.01	WARNING LIGHTS (TYPE A)	EACH	50
712-06	SIGNS (CONSTRUCTION)	S.F.	1486
712-07.03	TEMPORARY BARRICADES (TYPE III)	L.F.	77
712-09.02	REMOVABLE PAVEMENT MARKING (8" BARRIER LINE)	L.F.	1406
712-09.04	REMOVABLE PAVEMENT MARKING (STOP LINE)	L.F.	48
712-09.08	REMOVABLE PAVEMENT MARKING (6" line)	L.F.	840
712-09.30	REMOVABLE BLACK-OUT TAPE (6")	L.F.	1500
713-16.01	CHANGEABLE MESSAGE SIGN UNIT	EACH	2
716-02.05	PLASTIC PAVEMENT MARKING (STOP LINE)	L.F.	31
716-05.20	PAINTED PAVEMENT MARKING (6" LINE)	L.M.	0.8
716-12.02	ENHANCED FLATLINE THERMO PVMT MRKNG (6IN LINE)	L.M.	0.8
730-40.02	TEMPORARY TRAFFIC SIGNAL SYSTEM	LS	1

TRAFFIC CONTROL LEGEND

SYMBOL	ITEM
	FLEXIBLE DRUMS (CHANNELIZING)
	SIGN (CONSTRUCTION)
	TRAFFIC FLOW
	PORTABLE BARRIER RAIL
	TEMPORARY ATTENUATOR
	WORK ZONE
	CHANGEABLE MESSAGE SIGN

TRAFFIC CONTROL PHASING NOTES

(PHASES BASED ON STD. DWG. NOS. T-WZ-10, 32, 33, 34 & 35)

PHASE I

(1) CLOSE S.R. 107 (UNICOI DR.) FROM APPROXIMATELY STATION 208+40.00 TO STATION 214+20.00, UTILIZING A DETOUR AS SHOWN ON SHEET T5.
(2) DETOUR TRUCK TRAFFIC AS SHOWN ON SHEET T6.
(3) INSTALL TEMPORARY SIGNAGE ON WASHINGTON STREET TO ENFORCE ONE-WAY TRAFFIC AS SHOWN ON SHEET T3.
(4) CLOSE THE SOUTHBOUND LANE ON S.R. 173 AND THE EASTBOUND LANE ON S.R. 107. UTILIZE A TEMPORARY TRAFFIC SIGNAL SYSTEM TO MAINTAIN TWO-WAY TRAFFIC THROUGH THE INTERSECTION.
(5) UTILIZE TEMPORARY SIGNALS TO MAINTAIN DRIVEWAY ACCESS THROUGH WORK ZONE.
(6) DIVERT INDIAN CREEK TO THE SOUTH IN A 35' DIVERSION CHANNEL, ENSURING THE TOP OF THE BANKS OF THE DIVERSION ARE AT A MINIMUM ELEVATION OF 1917'.
(7) UTILIZING A HAUL ROAD, REMOVE THE EXISTING BRIDGE AND BUILD THE PROPOSED BRIDGE. ONCE PROPOSED BRIDGE IS COMPLETE, REMOVE THE HAUL ROAD AND DIVERSION CHANNEL, REBUILDING THE CREEK BANKS WITH CLASS C RIP-RAP.
(8) BUILD THE PROPOSED FULL DEPTH ROADWAY AND STORM SEWER FROM APPROXIMATELY STA. 208+50.00 TO STA. 214+20.00, ALONG THE SOUTHBOUND S.R. 173 LANE FROM STA. 214+20.00 TO STA. 216+50, AND ALONG THE EASTBOUND S.R. 107 LANE FROM STA. 300+00.00 TO STA. 302+00.00.

PHASE II

(1) MAINTAIN S.R. 107 (UNICOI DR.) ROAD CLOSURE AS NEEDED, UTILIZING A DETOUR AS SHOWN ON SHEET T5.
(2) DETOUR TRUCK TRAFFIC AS SHOWN ON SHEET T6.
(3) MAINTAIN TEMPORARY SIGNAGE ON WASHINGTON STREET TO ENFORCE ONE-WAY TRAFFIC AS SHOWN ON SHEET T4.
(4) CLOSE THE NORTHBOUND LANE ON S.R. 173 AND THE WESTBOUND LANE ON S.R. 107. UTILIZE A TEMPORARY TRAFFIC SIGNAL SYSTEM TO MAINTAIN TWO-WAY TRAFFIC THROUGH THE INTERSECTION.
(5) UTILIZE TEMPORARY SIGNALS TO MAINTAIN DRIVEWAY ACCESS THROUGH WORK ZONE.
(6) MAINTAIN THE USE OF A HAUL ROAD AS NEEDED, WHILE BUILDING THE PROPOSED BRIDGE. ONCE PROPOSED BRIDGE IS COMPLETE, REMOVE THE HAUL ROAD AND DIVERSION CHANNEL, REBUILDING THE CREEK BANKS WITH CLASS C RIP-RAP.
(7) BUILD STORM SEWER AND THE FULL DEPTH PAVEMENT ALONG THE NORTHBOUND S.R. 173 TRAVEL LANE FROM STA. 214+20.00 TO STA. 216+50.00 AND WESTBOUND S.R. 107 TRAVEL LANE FROM STA. 300+00.00 TO STA. 302+00.00.

PHASE III

(1) RESURFACE AND APPLY FINAL PAVEMENT MARKINGS ACCORDING TO THE PLANS.

TRAFFIC CONTROL NOTES

THE CONSTRUCTION SIGNING PLANS ARE TO SERVE AS A GUIDE ONLY. OTHER SIGNS MAY BE REQUIRED DURING VARIOUS PHASES OF CONSTRUCTION.

THIS TRAFFIC CONTROL PLAN DOES NOT RELIEVE THE CONTRACTOR OF THE RESPONSIBILITY OF INSTALLING TRAFFIC CONTROL DEVICES IN ACCORDANCE WITH THE CURRENT EDITION OF THE "MANUAL ON UNIFORM TRAFFIC CONTROL DEVICES."

ALL CONSTRUCTION SIGNS ON THE PROJECT SHALL BE COVERED WHEN WORK WILL NOT BE AFFECTING TRAFFIC. COST OF COVERING/UNCOVERING SIGNS SHALL NOT BE MEASURED AND PAID FOR SEPARATELY, BUT ALL COST SHALL BE INCLUDED IN THE ORIGINAL UNIT PRICE BID FOR ITEM NO. 712-06, SIGNS (CONSTRUCTION) PER SQUARE FOOT.

ALL TRAFFIC CONTROL DEVICES SHALL BE APPROVED BY THE TDOT MANAGER.

NOTE:
CONTRACTOR SHALL REPLACE ALL TEMPORARY TRAFFIC CONTROL DEVICES WITHIN THE PROJECTS LIMITS.

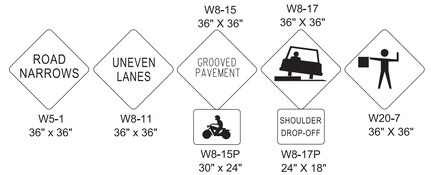

SIGNS SHOWN ABOVE ARE TO BE USED WHEN CONSTRUCTION OPERATIONS WARRANT. TO BE USED AS DIRECTED BY THE TDOT MANAGER.

TRAFFIC CONTROL SIGN TABULATION

M.U.T.C.D. SIGN NO.	LEGEND	SIZE IN INCHES L	X	W	S.F.	NO. REQUIRED PHASE I	NO. REQUIRED PHASE II	NO. REQUIRED PHASE III	NO. REQUIRED TRUCK DETOUR	TOTAL NO. REQUIRED	ITEM NO. 712-06 S.F.	STANDARD DRAWING NO.
W20-1	ROAD WORK	36"	X	36"	9	3	3			3	27.00	
W20-4	ONE LANE ROAD	36"	X	36"	9	2	2			2	18.00	
G20-2	END ROAD WORK	36"	X	18"	5	3	3			3	13.50	
W3-3	SIGNAL AHEAD	30"	X	30"	6	2	2			2	12.50	
W3-4	BE PREPARED TO STOP	36"	X	36"	9	2	2			2	18.00	
R10-6(MOD.)	STAY IN LANE TO EXTEND GREEN	30"	X	42"	9	2	2			2	17.50	
R10-6	STOP HERE ON RED	24"	X	36"	6	2	2			2	12.00	
W20-7	FLAGGER	36"	X	36"	9			2		2	18.00	
W5-1	ROAD NARROWS	36"	X	36"	9			2		2	18.00	
W8-11	UNEVEN LANES	36"	X	36"	9			2		2	18.00	
W8-15	GROOVED PAVEMENT	36"	X	36"	9			2		2	18.00	
W8-17P	MOTORCYCLE (PLAQUE)	30"	X	24"	5			2		2	10.00	
W8-17P	SHOULDER DROP-OFF (PLAQUE)	36"	X	36"	9			2		2	18.00	
W20-7	SHOULDER DROP-OFF (SYMBOL)	24"	X	18"	3			2		2	6.00	
R11-2	ROAD CLOSED	48"	X	30"	10	2	2			2	20.00	
R1-1	STOP	36"	X	36"	9	1	1			1	9.00	
R6-1R	ONE WAY - RIGHT	54"	X	18"	7	1	1			1	6.75	
R6-1L	ONE WAY - LEFT	54"	X	18"	7	3	3			3	20.25	
R3-1	NO RIGHT TURN (SYMBOL)	36"	X	36"	9	1	1			1	9.00	
R3-2	NO LEFT TURN (SYMBOL)	36"	X	36"	9	2	2			2	18.00	
R5-1A	WRONG WAY	42"	X	30"	9	2	2			2	17.50	
R5-1A	DO NOT ENTER	36"	X	36"	9	2	2			2	18.00	
TN-6b	STATE ROUTE MARKER	30"	X	24"	5	64	64		56	64	320.00	
M3-4	DIRECTIONAL SIGN (WEST)	24"	X	12"	2	15	15		8	15	30.00	
M3-2	DIRECTIONAL SIGN (EAST)	24"	X	12"	2	24	24		15	24	48.00	
M6-3	DIRECTIONAL SIGN (UP ARROW)	21"	X	15"	2	6	6		3	6	13.13	
M5-1L	DIRECTIONAL SIGN (LEFT TURN ARROW)	21"	X	15"	2	4	4		4	4	8.75	
M6-1	DIRECTIONAL SIGN (LEFT ARROW)	21"	X	15"	2	6	6		8	8	17.50	
M5-1R	DIRECTIONAL SIGN (RIGHT TURN ARROW)	21"	X	15"	2	5	5		4	5	10.94	
M6-1	DIRECTIONAL SIGN (RIGHT ARROW)	21"	X	15"	2	7	7		7	7	15.31	
M4-8	DETOUR	24"	X	12"	2	25	25		25	25	50.00	
M4-8a	END DETOUR	24"	X	18"	3	4	4		2	4	12.00	
W20-2	DETOUR AHEAD	36"	X	36"	9	2	2			2	18.00	
W20-2F	DETOUR XX FT	36"	X	36"	9	1	1			1	9.00	
R11-3a(MOD.)	LOCAL TRAFFIC ONLY	48"	X	30"	10	2	2			2	20.00	
R11-3a(MOD.)	ROAD CLOSED X MILES AHEAD	60"	X	30"	13	5	5			5	62.50	
M3-4	DIRECTIONAL SIGN (WEST)	36"	X	18"	5	5	5		4	5	22.50	
M3-2	DIRECTIONAL SIGN (EAST)	36"	X	18"	5	4	4		4	4	18.00	
M4-8	DETOUR	30"	X	15"	3	7	7		8	8	25.00	
M4-4	TRUCK	24"	X	12"	2				27	27	54.00	
M4-4	TRUCK	36"	X	18"	5				8	8	36.00	
M6-3	DIRECTIONAL SIGN (UP ARROW)	30"	X	21"	4	5	5		4	5	21.88	
M6-2	DIRECTIONAL SIGN (45° DIRECTION ARROW UP)	30"	X	21"	4	4	4		3	4	17.50	
R11-3a(MOD.)	TRUCK/WIDE LOAD DETOUR INFORMATION SIGNS	60"	X	48"	20				5	5	100.00	
R11-3a(MOD.)	TRUCK/WIDE LOAD DETOUR INFORMATION SIGNS	60"	X	30"	13				17	17	212.50	
										TOTAL	1486	S.F.

TYPE	YEAR	PROJECT NO.	SHEET NO.
PS&E	2024	BR-STP-107(28)	T2

REV. 09/16/24: UPDATED TRAFFIC CONTROL PHASING NOTES AND TRAFFIC CONTROL LEGEND.

SEALED BY

09/16/2024

STATE OF TENNESSEE
DEPARTMENT OF TRANSPORTATION

TRAFFIC CONTROL PHASING NOTES, LEGEND AND TABULATION

13-SEP-2024 14:04
\\tdot01nas002.tdot.state.tn.us\01Shared\SURVDES\Design\PROJECTS\Unicoi SR 107\00T2.sht

TYPE	YEAR	PROJECT NO.	SHEET NO.
PS&E	2024	BR-STP-107(28)	T3

REV. 09/16/24: REMOVED DADs AND ADDED TEMPORARY SIGNALS AT DRIVEWAY ENTRANCES. UPDATED TEMPORARY DRIVEWAY ACCESS ON TRACT 11. CADD CORRECTIONS.

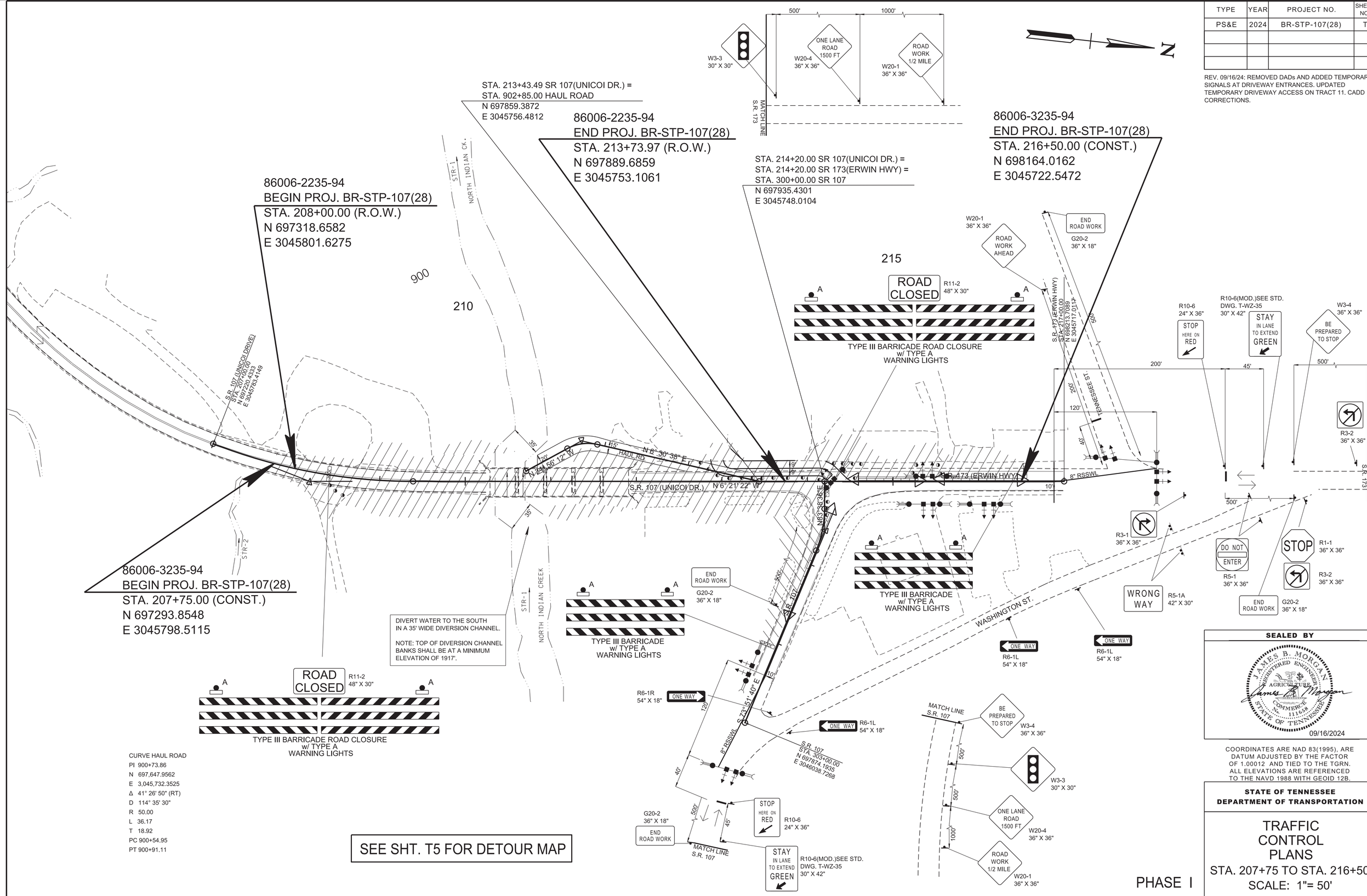

SEALED BY

JAMES B. MORGAN REGISTERED ENGINEER AGRICULTURE COMMERCE No. 111658 STATE OF TENNESSEE

09/16/2024

COORDINATES ARE NAD 83(1995), ARE DATUM ADJUSTED BY THE FACTOR OF 1.00012 AND TIED TO THE TGRN. ALL ELEVATIONS ARE REFERENCED TO THE NAVD 1988 WITH GEOID 12B.

STATE OF TENNESSEE
DEPARTMENT OF TRANSPORTATION

TRAFFIC CONTROL PLANS
STA. 207+75 TO STA. 216+50
SCALE: 1"= 50'

13-SEP-2024 14:05
\\tdot01nas002.tdot.state.tn.us\01Shared\SURVDES\Design\PROJECTS\Unicoi SR 107\00T3.sht

TYPE	YEAR	PROJECT NO.	SHEET NO.
PS&E	2024	BR-STP-107(28)	T4

REV. 09/16/24: REMOVED DADs AND ADDED TEMPORARY SIGNALS AT DRIVEWAY ENTRANCES. UPDATED TEMPORARY DRIVEWAY ACCESS ON TRACT 11. CADD CORRECTIONS.

86006-2235-94
BEGIN PROJ. BR-STP-107(28)
STA. 208+00.00 (R.O.W.)
N 697318.6582
E 3045801.6275

86006-2235-94
END PROJ. BR-STP-107(28)
STA. 213+73.97 (R.O.W.)
N 697889.6859
E 3045753.1061

STA. 214+20.00 SR 107(UNICOI DR.) =
STA. 214+20.00 SR 173(ERWIN HWY) =
STA. 300+00.00 SR 107
N 697935.4301
E 3045748.0104

86006-3235-94
END PROJ. BR-STP-107(28)
STA. 216+50.00 (CONST.)
N 698164.0162
E 3045722.5472

86006-3235-94
BEGIN PROJ. BR-STP-107(28)
STA. 207+75.00 (CONST.)
N 697293.8548
E 3045798.5115

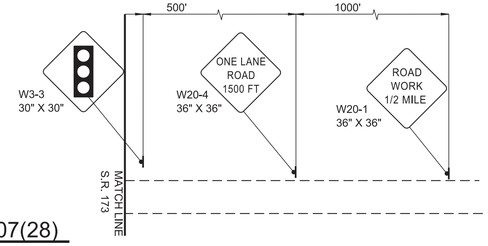

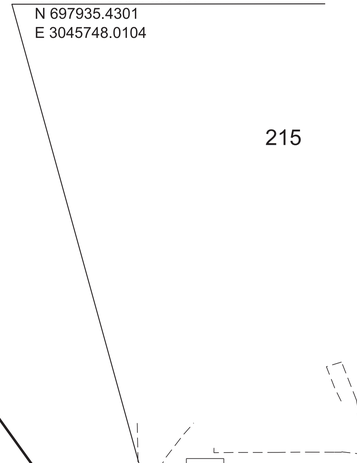

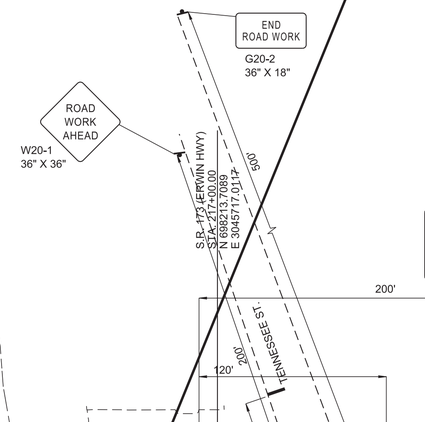

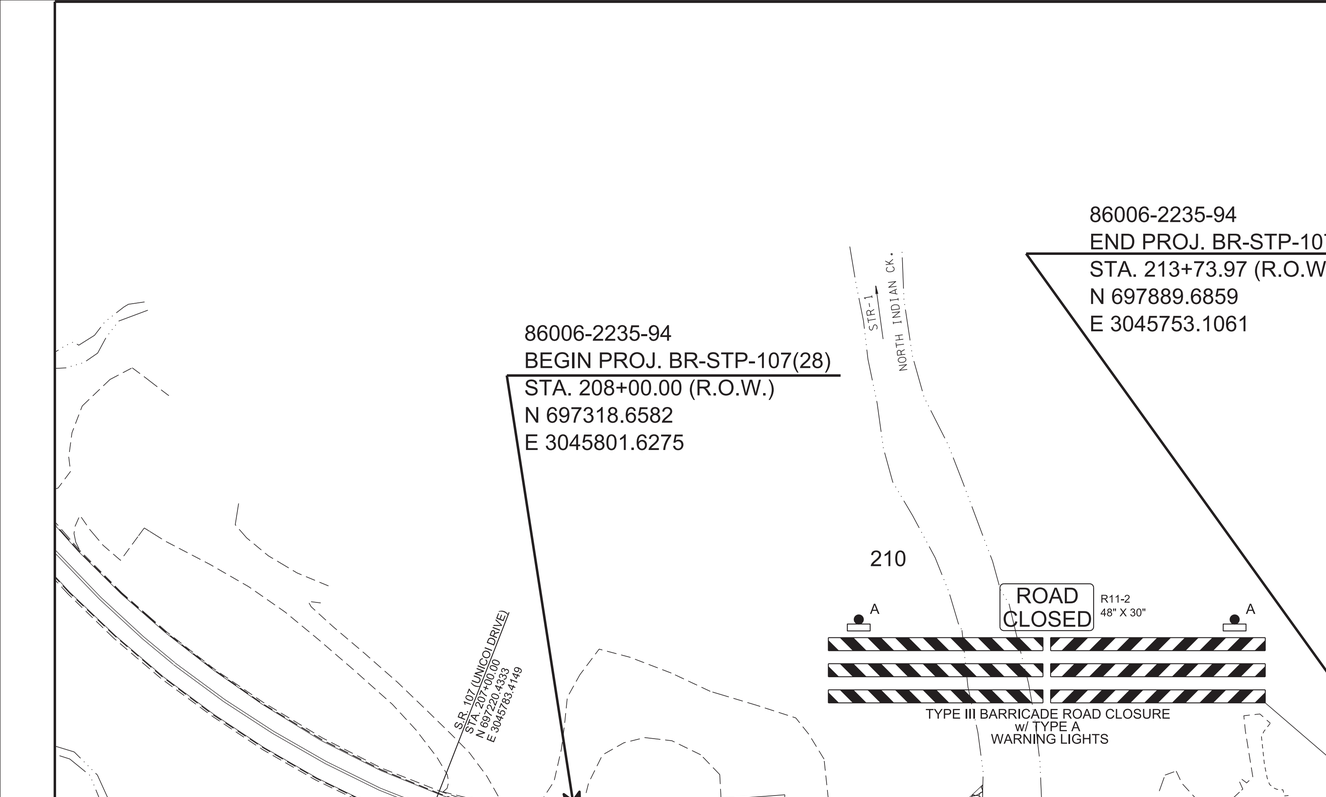

SEE SHT. T5 FOR DETOUR MAP

PHASE II

SEALED BY

COORDINATES ARE NAD 83(1995), ARE DATUM ADJUSTED BY THE FACTOR OF 1.00012 AND TIED TO THE TGRN. ALL ELEVATIONS ARE REFERENCED TO THE NAVD 1988 WITH GEOID 12B.

STATE OF TENNESSEE
DEPARTMENT OF TRANSPORTATION

TRAFFIC CONTROL PLANS

STA. 207+75 TO STA. 216+50

SCALE: 1"= 50'

13-SEP-2024 14:05
\\tdot01nas002.tdot.state.tn.us\01Shared\SURVDES\Design\PROJECTS\Unicoi SR 107\00T4.sht

TYPE	YEAR	PROJECT NO.	SHEET NO.
PS&E	2024	BR-STP-107(28)	T5

EAST 107 — ROAD CLOSED 5 MILES AHEAD

DETOUR AHEAD

WEST 107

CHANGEABLE MESSAGE SIGN

S. MAIN AVE.

S.R. 107 (UNICOI DR.)

I-26

DETOUR WEST 107

DETOUR EAST 107 WEST 107

DETOUR 173 EAST 107

DETOUR 107

DETOUR 173 EAST 107

DETOUR WEST 107

DETOUR 173 EAST 107

DETOUR 173 EAST 107

DETOUR 173 EAST 107

DETOUR 173 EAST 107

END DETOUR 107

EAST 107 — ROAD CLOSED 4 MILES AHEAD

DETOUR WEST 107

DETOUR 173 EAST 107

DETOUR WEST 107

DETOUR EAST 173 EAST 107

DETOUR 173 EAST 107

DETOUR EAST 173 EAST 107

DETOUR EAST 173 EAST 107

DETOUR 173 EAST 107

DETOUR WEST 107 EAST 107

DETOUR WEST 107 EAST 107

DETOUR WEST 107

DETOUR WEST 107

DETOUR WEST 107

WASHINGTON

DETOUR WEST 107

WEST 107 — ROAD CLOSED 1 MILE AHEAD

EAST 107 — ROAD CLOSED 2 MILES AHEAD

DETOUR 173 EAST 107

WEST 107 — ROAD CLOSED 1/2 MILE AHEAD

EAST 107 — ROAD CLOSED 1 MILE AHEAD

DETOUR 173 EAST 107

EAST 107

END DETOUR 173 EAST 107

END DETOUR 107

LOCAL TRAFFIC ONLY

S.R. 107 (UNICOI DR.)

S.R. 173 (ERWIN HWY)

S.R. 173 (UNICOI DR.)

CSXT

RAILROAD

DETOUR WEST 107

DETOUR WEST 107 EAST 107

DETOUR WEST 107

DETOUR 1500 FT

DETOUR AHEAD

CHANGEABLE MESSAGE SIGN

END DETOUR EAST 107

24'

A — ROAD CLOSED — R11-2 48" X 30" — A

TYPE III BARRICADE ROAD CLOSURE w/ TYPE A WARNING LIGHTS

PROJECT LOCATION

N

DETOUR MAP

SEALED BY

JAMES B. MORGAN
REGISTERED ENGINEER
DEPT. OF AGRICULTURE
COMMERCE
No. 111658
STATE OF TENNESSEE

07/31/2024

STATE OF TENNESSEE
DEPARTMENT OF TRANSPORTATION

TRAFFIC CONTROL PLANS

SCALE: 1"=1300'

31-JUL-2024 10:16
\\tdot01nas002.tdot.state.tn.us\01Shared\SURVDES\Design\PROJECTS\Unicoi SR 107\00T5.sht

TYPE	YEAR	PROJECT NO.	SHEET NO.
PS&E	2024	BR-STP-107(28)	T6

N

TENNESSEE
NORTH CAROLINA

I-26
US 19
US 19E
NC 226
S. MAIN AVE
S.R. 107
S.R. 173
S. ROAN ST.
S.R. 359
US 321

PROJECT LOCATION

SPRUCE PINE

NORTH CAROLINA
TENNESSEE

SR 107 TO SR 107 EAST AND SR 173 CLOSED TO WIDE LOADS OVER 10 FT.
FOLLOW DETOUR AT EXIT 27 FOR SR 107 EAST AND SR 173

SR 107 TO SR 107 EAST AND SR 173 CLOSED TO WIDE LOADS OVER 10 FT.
ONE LANE ROAD 5 MILES AHEAD HORIZ. CLEARANCE 10 FEET

CHANGEABLE MESSAGE SIGN

SR 107 TO SR 107 EAST AND SR 173 CLOSED TO WIDE LOADS OVER 10 FT.
ONE LANE ROAD 1 MILE AHEAD HORIZ. CLEARANCE 10 FEET

SR 107 AT SR 173 CLOSED TO TRUCKS FOLLOW DETOUR SIGNS AT EXIT 27

SR 173 TO SR 107 EAST AND WEST CLOSED TO WIDE LOADS OVER 10 FT.
ONE LANE ROAD 1 MILE AHEAD HORIZ. CLEARANCE 10 FEET

SR 173 TO SR 107 EAST AND WEST CLOSED TO WIDE LOADS OVER 10 FT.
FOLLOW DETOUR AT EXIT 37 FOR SR 107 WEST

SR 173 TO SR 107 6 MILES AHEAD CLOSED TO WIDE LOADS OVER 10 FT

CHANGEABLE MESSAGE SIGN

SR 107 TO SR 107 EAST AND SR 173 CLOSED TO WIDE LOADS OVER 10 FT.
ONE LANE ROAD 2 MILES AHEAD HORIZ. CLEARANCE 10 FEET

SR 107 TO SR 107 WEST AND SR 173 CLOSED TO WIDE LOADS OVER 10 FT.
ONE LANE ROAD 1 MILE AHEAD HORIZ. CLEARANCE 10 FEET

SR 173 TO SR 107 EAST AND WEST CLOSED TO TRUCKS FOLLOW DETOUR AT I-26 WB EXIT 27

SR 107 TO SR 107 WEST AND SR 173 CLOSED TO WIDE LOADS OVER 10 FT.
ONE LANE ROAD 6 MILES AHEAD HORIZ. CLEARANCE 10 FEET

TN SR 107 TO SR 107W / SR 173 CLOSED TO WIDE LOADS
FOLLOW US 19E TO I-26

NC 226 CONTINUE ON US 19E

TRUCK DETOUR 107 WEST
TRUCK DETOUR 173 EAST 107
TRUCK DETOUR 173 WEST 107
TRUCK END DETOUR 107
TRUCK END DETOUR 173

SEALED BY

JAMES B. MORGAN
REGISTERED ENGINEER
AGRICULTURE
COMMERCE
No. 111668
STATE OF TENNESSEE

07/31/2024

STATE OF TENNESSEE
DEPARTMENT OF TRANSPORTATION

TRAFFIC CONTROL PLANS

SCALE: 1"=8000'

TRUCK DETOUR MAP

31-JUL-2024 10:17
\\tdot01nas002.tdot.state.tn.us\01Shared\SURVDES\Design\PROJECTS\Unicoi SR 107\00T6.sht

THIS DOCUMENT HAS BEGIN DIGITALLY SIGNED AND SEALED BY:

Joe Laine 2025.05.16 15:58:16 -05'00'

PRINTED COPIES OF THIS DOCUMENT ARE NOT CONSIDERED SIGNED AND SEALED. THE SIGNATURE MUST BE VERIFIED ON THE ELECTRONIC DOCUMENTS.

TENNESSEE DEPARTMENT OF TRANSPORTATION
JAMES K. POLK BUILDING, SUITE 1100
505 DEADERICK STREET
NASHVILLE, TN 37243
JOSEPH A. LAINE, P.E. NO. 123434

THE ABOVE NAMED PROFESSIONAL ENGINEER SHALL BE RESPONSIBLE FOR THE FOLLOWING SHEETS IN ACCORDANCE OF TENN. CODE ANN. §62-2-306.

SHEET NAME	SHEET NO.
SIGNATURE SHEET	STRUCTURE-SIGN3
LAYOUT OF BRIDGE	U-94-382
GENERAL NOTES & ESTIMATED QUANTITIES	U-94-385
BILL OF STEEL	U-94-400

THIS DOCUMENT HAS BEGIN DIGITALLY SIGNED AND SEALED BY:

Jonathan Shoulders 2025.05.16 15:53:32 -05'00'

PRINTED COPIES OF THIS DOCUMENT ARE NOT CONSIDERED SIGNED AND SEALED. THE SIGNATURE MUST BE VERIFIED ON THE ELECTRONIC DOCUMENTS.

TENNESSEE DEPARTMENT OF TRANSPORTATION
JAMES K. POLK BUILDING, SUITE 1100
505 DEADERICK STREET
NASHVILLE, TN 37243
JONATHAN B. SHOULDERS, P.E. NO. 116976

THE ABOVE NAMED PROFESSIONAL ENGINEER SHALL BE RESPONSIBLE FOR THE FOLLOWING SHEETS IN ACCORDANCE OF TENN. CODE ANN. §62-2-306.

SHEET NAME	SHEET NO.
SIGNATURE SHEET	STRUCTURE-SIGN3
LAYOUT OF BRIDGE	U-94-883
GENERAL NOTES	U-94-884
ESTIMATED QUANTITIES	U-94-885
SUPERSTRUCTURE	U-94-888
SUPERSTRUCTURE DETAILS	U-94-889
STRUCTURAL STEEL DETAILS	U-94-890
STRUCTURAL STEEL DETAILS	U-94-891
ABUTMENT NO. 1	U-94-892
ABUTMENT NO. 1 DETAILS	U-94-893
ABUTMENT NO. 1 DETAILS	U-94-894
ABUTMENT NO. 2	U-94-895
ABUTMENT NO. 2 DETAILS	U-94-896
ABUTMENT NO. 2 DETAILS	U-94-897
BILL OF STEEL	U-94-899

YEAR	PROJECT NO.	SHEET NO.
2025	BR-STP-107(28)	STRUCTURE-SIGN3

STATE OF TENNESSEE
DEPARTMENT OF TRANSPORTATION

SIGNATURE SHEET

5/16/2025 2:25:42 PM
P:\STRUCTURES\CADD_REGION_1\86-UNICOI\86SR107007\CADD\BRIDGE_DRAWINGS\STEEL ALTERNATE\86SR107007SIG.DGN

9/26/24

THIS DOCUMENT HAS BEEN DIGITALLY SIGNED AND SEALED BY:

Joseph Andrew Laine
Digitally signed by Joe Laine
Date: 2024.09.26 10:17:38 -05'00'

PRINTED COPIES OF THIS DOCUMENT ARE NOT CONSIDERED SIGNED AND SEALED. THE SIGNATURE MUST BE VERIFIED ON THE ELECTRONIC DOCUMENTS.

TENNESSEE DEPARTMENT OF TRANSPORTATION
JAMES K. POLK BUILDING, SUITE 1100
505 DEADERICK STREET
NASHVILLE, TN 37243
JOSEPH A. LAINE, P.E. NO. 123434

THE ABOVE NAMED PROFESSIONAL ENGINEER SHALL BE RESPONSIBLE FOR THE FOLLOWING SHEETS IN ACCORDANCE OF TENN. CODE ANN. §62-2-306.

SHEET NAME	SHEET NO.
SIGNATURE SHEET	STRUCTURE-SIGN2
LIST OF DRAWINGS AND ESTIMATED BRIDGE QUANTITIES	B-1
LAYOUT OF BRIDGE	U-94-382
BILL OF STEEL	U-94-400

YEAR	PROJECT NO.	SHEET NO.
2024	BR-STP-107(28)	STRUCTURE-SIGN2

STATE OF TENNESSEE
DEPARTMENT OF TRANSPORTATION

SIGNATURE SHEET

$$$$$$SYTIME$$$$$$$
$$$$DGNSPEC$$$$$$$

7/31/24

THIS DOCUMENT HAS BEGIN DIGITALLY SIGNED AND SEALED BY:

Joe Laine

Digitally signed by Joe Laine
Date: 2024.07.31 10:32:30 -05'00'

PRINTED COPIES OF THIS DOCUMENT ARE NOT CONSIDERED SIGNED AND SEALED. THE SIGNATURE MUST BE VERIFIED ON THE ELECTRONIC DOCUMENTS.

TENNESSEE DEPARTMENT OF TRANSPORTATION
JAMES K. POLK BUILDING, SUITE 1100
505 DEADERICK STREET
NASHVILLE, TN 37243
JOSEPH A. LAINE, P.E. NO. 123434

THE ABOVE NAMED PROFESSIONAL ENGINEER SHALL BE RESPONSIBLE FOR THE FOLLOWING SHEETS IN ACCORDANCE OF TENN. CODE ANN. §62-2-306.

SHEET NAME	SHEET NO.
SIGNATURE SHEET	STRUCTURE-SIGN
LIST OF DRAWINGS AND ESTIMATED BRIDGE QUANTITIES	B-1
LAYOUT OF BRIDGE	U-94-382
GENERAL NOTES & ESTIMATED QUANTITIES	U-94-385
SUPERSTRUCTURE	U-94-388
SUPERSTRUCTURE DETAILS	U-94-389
SUPERSTRUCTURE DETAILS	U-94-390
SUPERSTRUCTURE DETAILS	U-94-391
PRESTRESSED BOX BEAM DETAILS	U-94-392
ABUTMENT NO. 1	U-94-393
ABUTMENT NO. 1 DETAILS	U-94-394
ABUTMENT NO. 2	U-94-395
ABUTMENT NO. 2 DETAILS	U-94-396
PIER NO. 1	U-94-397
PIER NO. 1 DETAILS	U-94-398
BILL OF STEEL	U-94-400

YEAR	PROJECT NO.	SHEET NO.
2024	BR-STP-107(28)	STRUCTURE-SIGN1

STATE OF TENNESSEE
DEPARTMENT OF TRANSPORTATION

SIGNATURE SHEET

$$$$$$SYTIME$$$$$$$
$$$$DGNSPEC$$$$$$$

CONST. NO.: 86006-3235-94

PROJECT NO.	YEAR	SHEET NO.
BR-STP-107-(28)	2025	B-1

REVISIONS

NO.	DATE	BY	BRIEF DESCRIPTION
1	05/16/2025	JS	REPLACED SHEET

ALTERNATE A - TWO-SPAN PRESTRESSED BOX BEAM SUPERSTRUCTURE

LIST OF DRAWINGS	DWG. NO.	LAST REV. DATE
LAYOUT OF BRIDGE	U-94-382	05/16/2025
GENERAL NOTES & ESTIMATED QUANTITIES	U-94-385	05/16/2025
FOUNDATION DATA	U-94-386	
FOUNDATION DATA	U-94-387	
SUPERSTRUCTURE	U-94-388	
SUPERSTRUCTURE DETAILS	U-94-389	
SUPERSTRUCTURE DETAILS	U-94-390	
SUPERSTRUCTURE DETAILS	U-94-391	
PRESTRESSED BOX BEAM DETAILS	U-94-392	
ABUTMENT NO. 1	U-94-393	
ABUTMENT NO. 1 DETAILS	U-94-394	
ABUTMENT NO. 2	U-94-395	
ABUTMENT NO. 2 DETAILS	U-94-396	
PIER NO. 1	U-94-397	
PIER NO. 1 DETAILS	U-94-398	
FINAL FOUNDATION DATA	U-94-399	
BILL OF STEEL	U-94-400	05/16/2025

ALTERNATE B - SINGLE SPAN WELDED PLATE GIRDER SUPERSTRUCTURE

LIST OF DRAWINGS	DWG. NO.	LAST REV. DATE
LAYOUT OF BRIDGE	U-94-883	05/16/2025
GENERAL NOTES	U-94-884	05/16/2025
ESTIMATED QUANTITIES	U-94-885	05/16/2025
FOUNDATION DATA	U-94-886	05/16/2025
FOUNDATION DATA	U-94-887	05/16/2025
SUPERSTRUCTURE	U-94-888	05/16/2025
SUPERSTRUCTURE DETAILS	U-94-889	05/16/2025
STRUCTURAL STEEL DETAILS	U-94-890	05/16/2025
STRUCTURAL STEEL DETAILS	U-94-891	05/16/2025
ABUTMENT NO. 1	U-94-892	05/16/2025
ABUTMENT NO. 1 DETAILS	U-94-893	05/16/2025
ABUTMENT NO. 1 DETAILS	U-94-894	05/16/2025
ABUTMENT NO. 2	U-94-895	05/16/2025
ABUTMENT NO. 2 DETAILS	U-94-896	05/16/2025
ABUTMENT NO. 2 DETAILS	U-94-897	05/16/2025
FINAL FOUNDATION	U-94-898	05/16/2025
BILL OF STEEL	U-94-899	05/16/2025

LIST OF EXISTING BRIDGE DRAWINGS

	DWG. NO.
LAYOUT OF BRIDGE	D-6-7
CONCRETE DECK GIRDER BRIDGES	D-4-76
CONCRETE ABUTMENT	D-4-174
CONCRETE PIERS	D-4-159
CONCRETE HANDRAIL	D-4-95
LAYOUT OF WIDENING	F-7-56
WIDENING DETAILS	F-7-57
WIDENING DETAILS	F-7-58
CONCRETE HANDRAIL	E-12-105

PIN NO.: 124631.00

DESIGN BY:	J. SHOULDERS	DATE:	03/2025
DRAWN BY:	J. SHOULDERS	DATE:	04/2025
SUPERVISED BY:	AP/GWK	DATE:	04/2025
CHECKED BY:	J. SHOULDERS	DATE:	04/2025

LIST OF STANDARD DRAWINGS

LIST OF STANDARD DRAWINGS	DWG. NO.	LAST REV. DATE
BRIDGE RAILING SINGLE SLOPE CONCRETE PARAPET	STD-1-1SS	07/24/2024
REINFORCED CONCRETE PAVEMENT AT BRIDGE ENDS	STD-1-5	06/05/2023
STANDARD PRECAST PRESTRESSED BRIDGE DECK PANELS GENERAL DETAILS	STD-4-1	04/08/2005
STANDARD PRECAST PRESTRESSED BRIDGE DECK PANELS DESIGN CRITERIA	STD-4-2	04/08/2005
STANDARD PRECAST PRESTRESSED BRIDGE DECK PANELS GENERAL DETAILS	STD-4-3	03/02/2002
STANDARD PRECAST PRESTRESSED BRIDGE DECK PANELS CONSTRUCTION DETAILS	STD-4-4	06/10/1996
STANDARD PILE DETAILS	STD-5-1	
STANDARD SEISMIC DETAILS	STD-6-1	12/08/2023
STANDARD REINFORCING BAR SUPPORT DETAILS FOR CONCRETE SLABS	STD-9-1	10/07/2008
MISCELLANEOUS ABUTMENT AND DRAINAGE DETAILS	STD-10-1	06/05/2023
MISC. ABUTMENT AND PAVEMENT AT BRIDGE ENDS BACKFILL DETAILS	STD-10-2	06/05/2023
STANDARD DETAILS FOR PRESTRESSED BOX BEAMS	STD-14-3	03/06/2024

LIST OF SPECIAL PROVISIONS REGARDING

LIST OF SPECIAL PROVISIONS REGARDING	PROV. NO.	LAST REV. DATE
REMOVAL OF ASBESTOS CONTAINING MATERIAL (ACM)	202ACM	07/07/2024

ALTERNATE A	ALTERNATE B
STATE ROUTE 107 (UNICOI DRIVE) OVER NORTH INDIAN CREEK BR. ID NO. 86SR1070007 STATION 210+80.00 CONTINUOUS PRESTRESSED CONCRETE BOX-BEAM WITH COMPOSITE CONCRETE DECK SLAB	STATE ROUTE 107 (UNICOI DRIVE) OVER NORTH INDIAN CREEK BR. ID NO. 86SR1070007 STATION 210+80.00 WELDED PLATE GIRDER (35" WEB) WITH COMPOSITE CONCRETE DECK SLAB
2 SPAN BRIDGE SPAN NO. 1 = 60'-0" SPAN NO. 2 = 60'-0" TOTAL LENGTH 120'-0"	SINGLE SPAN BRIDGE TOTAL LENTH = 120'-0"
44'-0" ROADWAY WITH STD-1-1SS 90° SKEW LAYOUT DWG NO. U-94-382	44'-0" ROADWAY WITH STD-1-1SS 90° SKEW LAYOUT DWG NO. U-94-883

ESTIMATED QUANTITIES

ITEM NO.	DESCRIPTION	UNIT	TOTAL	TOTAL
202-01.02	REMOVAL OF ASBESTOS	L.S.	1	1
202-04.01	REMOVAL OF STRUCTURE (EX. BR. NO. 86-SR107-05.22)	L.S.	1	1
204-02.01	DRY EXCAVATION (BRIDGES)	C.Y.	176	176
204-03.01	WET EXCAVATION (BRIDGES)	C.Y.	94	
204-10.01	FOUNDATION PREPARATION (PR NO 1, STA 210+80.00)	L.S.	1	
204-15	CORE DRILLING FOR PILES (SOIL)	L.F.	904	585
303-01.02	GRANULAR BACKFILL (BRIDGES)	TONS	30	30
602-04.01	STEEL STRUCTURES (35-INCH WEB, WELDED PLATE GIRDER)	L.S.		1
602-10.60	BEARING DEVICE (ABUTMENTS)	EACH		10
604-02.03	EPOXY COATED REINFORCING STEEL	LB.	48,378	37,373
604-03.01	CLASS "A" CONCRETE (BRIDGES)	C.Y.	154	50
604-03.02	STEEL BAR REINFORCEMENT (BRIDGES)	LB.	26,409	9,934
604-03.04	PAVEMENT AT BRIDGE ENDS	S.Y.	230	230
604-03.09	CLASS "D" CONCRETE (BRIDGE DECK)	C.Y.	155	196
604-04.01	APPLIED TEXTURE FINISH (NEW STRUCTURES)	S.Y.	582	351
604-05.31	BRIDGE DECK GROOVING (MECHANICAL)	S.Y.	776	776
606-03.03	STEEL PILES (12 INCH)	L.F.	1,176	612
606-03.06	PILE TIPS (STEEL PILES, 12 INCH)	EA.	40	18
615-02.05	PRESTRESSED CONCRETE BOX BEAM (33" X 36")	L.F.	578	
620-05.01	CONC PARAPET SINGLE SLOPE (STD-1-1SS)	L.F.	289	289
710-09.01	6" PERFORATED PIPE WITH VERTICAL DRAIN SYSTEM	L.F.	124	124
710-09.02	6" PIPE UNDERDRAIN	L.F.	28	28

SEALED BY

JONATHAN B. SHOULDERS
REGISTERED PROFESSIONAL ENGINEER
STATE OF TENNESSEE
05/16/2025

STATE OF TENNESSEE
DEPARTMENT OF TRANSPORTATION

INDEX OF DRAWINGS
STATE ROUTE 107
(UNICOI DRIVE)
OVER NORTH INDIAN CREEK
BRIDGE ID NO. 86SR1070007
LOG MILE 5.22
STATION 210+80.00
UNICOI COUNTY
2025

5/16/2025 2:52:48 PM
P:\STRUCTURES\CADD_REGION_1\86-UNICOI\86SR1070007\CADD\BRIDGE_DRAWINGS\STEEL ALTERNATE\86SR1070007AB1.DGN

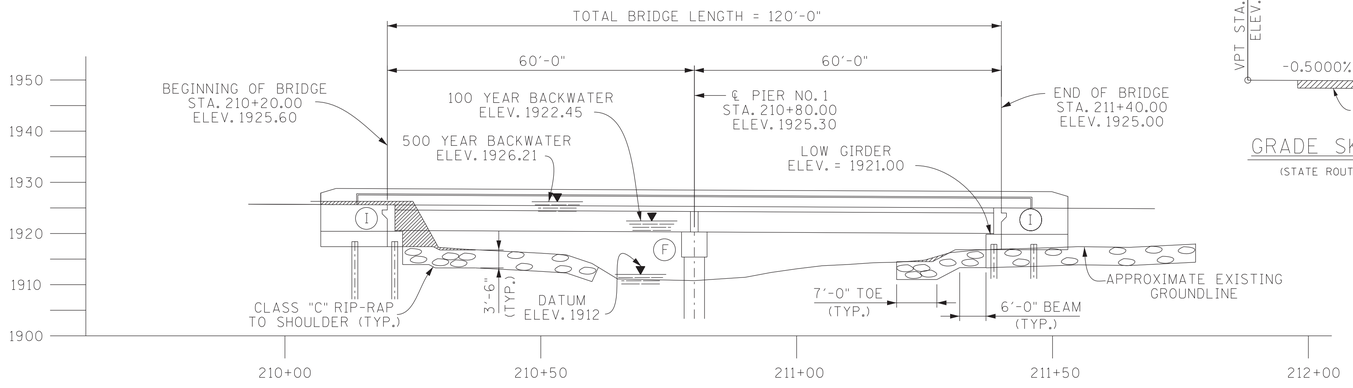

DENOTES APPROX. AREA OF EXCAVATION (TO BE PAID FOR UNDER ROADWAY ITEM)

(I) DENOTES: INTEGRAL

(F) DENOTES: FIXED

ELEVATION

(SCALE: 1" = 15'-0")

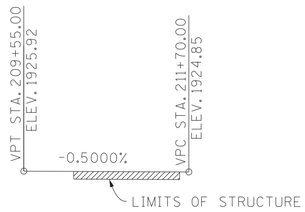

GRADE SKETCH

(STATE ROUTE 107)

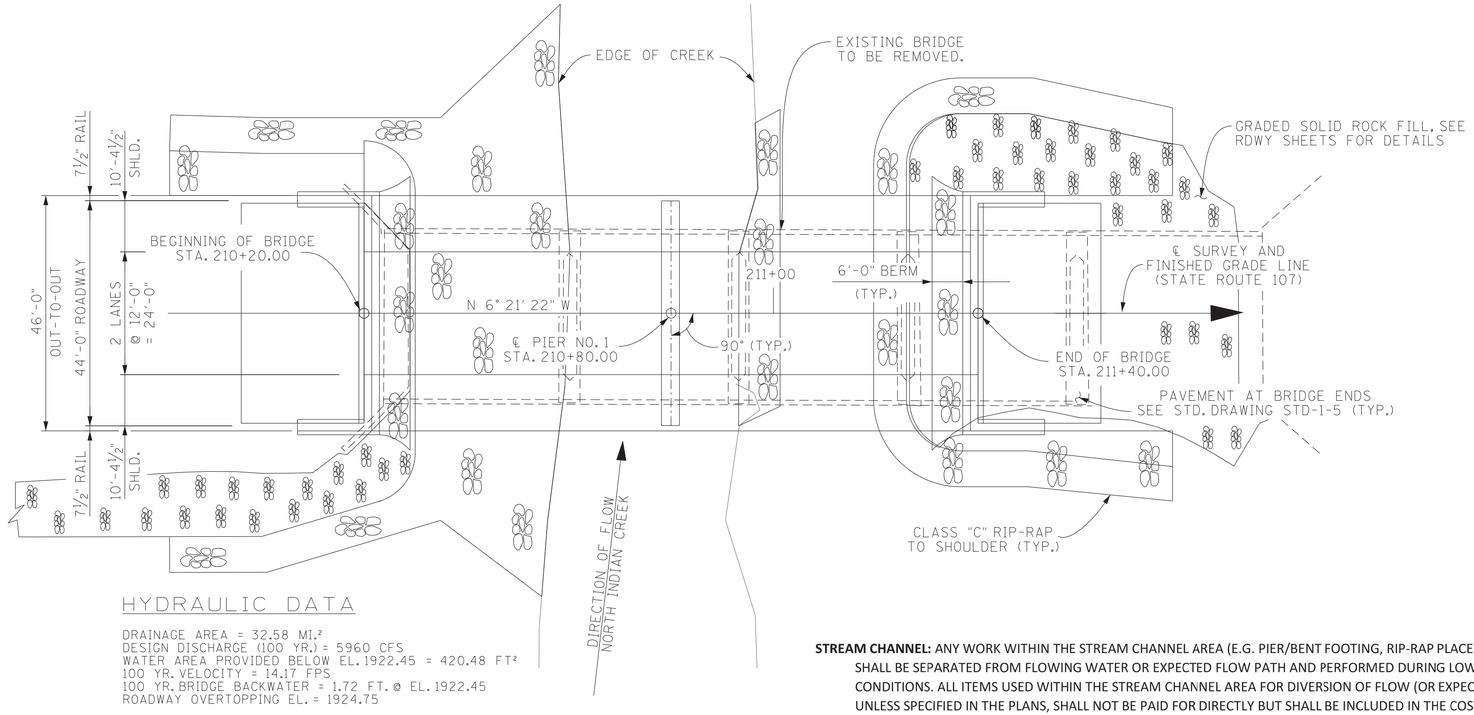

HYDRAULIC DATA

DRAINAGE AREA = 32.58 MI.²
DESIGN DISCHARGE (100 YR.) = 5960 CFS
WATER AREA PROVIDED BELOW EL. 1922.45 = 420.48 FT²
100 YR. VELOCITY = 14.17 FPS
100 YR. BRIDGE BACKWATER = 1.72 FT. @ EL. 1922.45
ROADWAY OVERTOPPING EL. = 1924.75

PLAN

(SCALE: 1" = 15'-0")

STREAM CHANNEL: ANY WORK WITHIN THE STREAM CHANNEL AREA (E.G. PIER/BENT FOOTING, RIP-RAP PLACEMENT, ETC.) SHALL BE SEPARATED FROM FLOWING WATER OR EXPECTED FLOW PATH AND PERFORMED DURING LOW FLOW CONDITIONS. ALL ITEMS USED WITHIN THE STREAM CHANNEL AREA FOR DIVERSION OF FLOW (OR EXPECTED FLOW), UNLESS SPECIFIED IN THE PLANS, SHALL NOT BE PAID FOR DIRECTLY BUT SHALL BE INCLUDED IN THE COST OF OTHER ITEMS. THIS NOTE EXCLUDES ANY ITEMS SPECIFIED IN THE PLANS FOR TEMPORARY DIVERSION CHANNELS (EC-STR-31).

PIN NO.: 124631.00
DESIGN BY: JOSEPH LAINE DATE: 07/2023
DRAWN BY: J. STEVENS DATE: 08/2023
SUPERVISED BY: CDL/GWK DATE: 05/2024
CHECKED BY: J. SHOULDERS DATE: 05/2024

CONST. NO.: 86006-3235-94

PROJECT NO.	YEAR	SHEET NO.
BR-STP-107-(28)	2024	

REVISIONS

NO.	DATE	BY	BRIEF DESCRIPTION
1	09/26/2024	JL	REVISION DATES
2	05/16/2025	JL	REVISION DATES

LIST OF DRAWINGS

	DWG. NO.	LAST REV. DATE
LAYOUT OF BRIDGE	U-94-382	05/16/2025
GENERAL NOTES & ESTIMATED QUANTITIES	U-94-385	05/16/2025
FOUNDATION DATA	U-94-386	
FOUNDATION DATA	U-94-387	
SUPERSTRUCTURE	U-94-388	
SUPERSTRUCTURE DETAILS	U-94-389	
SUPERSTRUCTURE DETAILS	U-94-390	
SUPERSTRUCTURE DETAILS	U-94-391	
PRESTRESSED BOX BEAM DETAILS	U-94-392	
ABUTMENT NO. 1	U-94-393	
ABUTMENT NO. 1 DETAILS	U-94-394	
ABUTMENT NO. 2	U-94-395	
ABUTMENT NO. 2 DETAILS	U-94-396	
PIER NO. 1	U-94-397	
PIER NO. 1 DETAILS	U-94-398	
FINAL FOUNDATION DATA	U-94-399	
BILL OF STEEL	U-94-400	05/16/2025

LIST OF STANDARD DRAWINGS

	DWG. NO.	LAST REV. DATE
BRIDGE RAILING SINGLE SLOPE CONCRETE PARAPET	STD-1-1SS	07/24/2024
REINFORCED CONCRETE PAVEMENT AT BRIDGE ENDS	STD-1-5	06/05/2023
STANDARD PRECAST PRESTRESSED BRIDGE DECK PANELS GENERAL DETAILS	STD-4-1	04/08/2005
STANDARD PRECAST PRESTRESSED BRIDGE DECK PANELS DESIGN CRITERIA	STD-4-2	04/08/2005
STANDARD PRECAST PRESTRESSED BRIDGE DECK PANELS GENERAL DETAILS	STD-4-3	03/02/2002
STANDARD PRECAST PRESTRESSED BRIDGE DECK PANELS CONSTRUCTION DETAILS	STD-4-4	06/10/1996
STANDARD PILE DETAILS	STD-5-1	
STANDARD SEISMIC DETAILS	STD-6-1	12/08/2023
STANDARD REINFORCING BAR SUPPORT DETAILS FOR CONCRETE SLABS	STD-9-1	10/07/2008
MISCELLANEOUS ABUTMENT AND DRAINAGE DETAILS	STD-10-1	06/05/2023
MISC. ABUTMENT AND PAVEMENT AT BRIDGE ENDS BACKFILL DETAILS	STD-10-2	06/05/2023
STANDARD DETAILS FOR PRESTRESSED BOX BEAMS	STD-14-3	03/06/2024

LIST OF SPECIAL PROVISIONS REGARDING

	PROV. NO.	DATE
REMOVAL OF ASBESTOS CONTAINING MATERIAL (ACM)	202ACM	07/07/2024

SEALED BY

JOSEPH ANDREW LAINE
REGISTERED
XVI
ENGINEER
125
STATE OF TENNESSEE
5/16/2025

STATE OF TENNESSEE
DEPARTMENT OF TRANSPORTATION

LAYOUT OF BRIDGE
STATE ROUTE 107
(UNICOI DRIVE)
OVER NORTH INDIAN CREEK
BRIDGE ID NO. 86SR1070007
LOG MILE 5.22
STATION 210+80.00
UNICOI COUNTY
2024

U-94-382

$$$$$SYTIMES$$$$$$
$$$$DGNSPEC$$$$$$

CONST. NO.: 86006-3235-94

PROJECT NO.	YEAR	SHEET NO.
BR-STP-107-(28)	2024	

REVISIONS

NO.	DATE	BY	BRIEF DESCRIPTION

SHEET INTENTIONALLY LEFT BLANK.

$$$$$$DGNSPEC$$$$$$

CONST. NO.: 86006-3235-94

PROJECT NO.	YEAR	SHEET NO.
BR-STP-107-(28)	2024	

REVISIONS

NO.	DATE	BY	BRIEF DESCRIPTION

SHEET INTENTIONALLY LEFT BLANK.

$$$$$$YTIME$$$$$$$

$$$$$DGNSPEC$$$$$$$

CONST. NO.: 86006-3235-94

PROJECT NO.	YEAR	SHEET NO.
BR-STP-107-(28)	2024	

REVISIONS

NO.	DATE	BY	BRIEF DESCRIPTION
1	05/16/2025	JS	GENERAL FORMATTING REVISIONS AND
			REMOVAL OF BID ITEM

GENERAL NOTES:

CONSTRUCTION SPECIFICATIONS: TENNESSEE DEPARTMENT OF TRANSPORTATION STANDARD SPECIFICATIONS FOR ROAD AND BRIDGE CONSTRUCTION (JANUARY 1, 2021 EDITION).

DESIGN SPECIFICATIONS: 9TH EDITION (2020) AASHTO LRFD BRIDGE DESIGN SPECIFICATIONS AND THE 2ND EDITION (2011) AASHTO GUIDE SPECIFICATIONS FOR LRFD SEISMIC BRIDGE DESIGN WITH INTERIMS.

LOADING:

A. HL-93 LIVE LOADING;

B. SEISMIC DESIGN CATEGORY "A" WITH A_S= 0.135, S_{DS}=0.264, S_{D1}=0.106, (1000 YEAR RETURN PERIOD).

C. DEAD LOAD INCLUDES 35 LB/SQ. FT. FOR FUTURE WEARING SURFACE.

CONCRETE: TO BE CLASS A (CAST-IN-PLACE) F'C = 3000 PSI EXCEPT AS NOTED OTHERWISE.

BRIDGE DECKS: CLASS D CONCRETE FOR BRIDGE DECKS SHALL BE IN ACCORDANCE WITH SECTION 604 OF THE STANDARD SPECIFICATIONS.

BRIDGE DECK SURFACE FINISH: TO BE IN ACCORDANCE WITH METHOD 3 IN ARTICLE 604.22 OF THE STANDARD SPECIFICATIONS.

BRIDGE DECK FORMS: BRIDGE DECK FORMS FOR CONCRETE DECKS SHALL BE CONSTRUCTED USING EITHER REMOVABLE FORMS OR PERMANENT FORMS. PERMANENT FORMS MAY BE EITHER REMAIN-IN-PLACE STEEL OR PRECAST, PRESTRESSED CONCRETE PANELS. IN EITHER CASE, FORMS SHALL BE ATTACHED BY MEANS OTHER THAN WELDING TO MAIN STRUCTURAL MEMBERS OR REINFORCING STEEL. TEMPORARY ERECTION DIAPHRAGMS MUST BE USED AT THE ENDS OF PRECAST CONCRETE GIRDERS WHERE END DIAPHRAGMS, SUPPORT DIAPHRAGMS, OR ABUTMENT ENDWALLS ARE TO BE POURED CONCURRENTLY WITH THE DECK AND SHALL BE PROVIDED ELSEWHERE IN ACCORDANCE WITH THE STANDARD SPECIFICATIONS TO PREVENT GIRDER ROTATION. SEE STANDARD DRAWINGS STD-4-1 THRU 4, STD-14-3, AND ARTICLE 604.05 OF THE STANDARD SPECIFICATIONS.

REINFORCING STEEL: SHALL BE ASTM A615 GRADE 60 UNLESS NOTED OTHERWISE. SEE SECTIONS 604 AND 907 OF THE STANDARD SPECIFICATIONS.

FOUNDATION PREPARATION: SEE SECTION 204 OF THE STANDARD SPECIFICATIONS. IF IT IS DETERMINED THAT COFFERDAMS ARE REQUIRED, THEY SHALL BE IN ACCORDANCE WITH SECTION 204.09 OF THE STANDARD SPECIFICATIONS.

SHOP DRAWINGS: SEE SECTION 105.02 OF THE STANDARD SPECIFICATIONS.

PILE TIPS: PILES SHALL BE EQUIPPED WITH CAST STEEL POINTS. ALSO, SEE STANDARD DRAWING STD-5-1 FOR ADDITIONAL NOTES.

END-BEARING STEEL PILES: TO BE HP12X53 DRIVEN TO REFUSAL ON ROCK OR A MINIMUM BEARING OF 135 TONS FOR THE BENTS AND 135 TONS FOR THE ABUTMENTS. ALL PILES SHALL BE ASTM A709 GRADE 50 STEEL.

END-BEARING STEEL PILES AT BENTS: FOUNDATIONS FOR BENTS SHALL BE EXCAVATED TO THE BOTTOM OF FOOTING ELEVATIONS SHOWN. ROD SOUNDINGS SHALL THEN BE MADE AS DIRECTED BY THE ENGINEER. FROM THE RESULTS OBTAINED, THE ENGINEER OF STRUCTURES WILL DECIDE IF PILES WILL BE USED OR THE FOOTINGS LOWERED TO ROCK. COST OF ROD SOUNDINGS TO BE INCLUDED IN THE UNIT PRICE BID FOR OTHER ITEMS. NO REINFORCING STEEL FOR BENT COLUMNS OR FOOTINGS SHALL BE ORDERED UNTIL FINAL FOOTING ELEVATIONS HAVE BEEN DETERMINED.

PILE PRE-DRILLING: THE BRIDGE FOUNDATION REPORT INDICATES THE POTENTIAL FOR EXCESSIVELY HARD DRIVING CONDITIONS THAT MAY CAUSE SHALLOW REFUSAL OF THE PILE. AS A RESULT, ALL PILES SHALL BE INSTALLED IN ACCORDANCE WITH THE FOLLOWING DETAILS.

1. A 2'-0" DIAMETER HOLE SHALL BE DRILLED IN THE PLANS LOCATION FOR THE PILE. THE AMOUNT OF CORE DRILLING (SOIL) WILL VARY DUE TO LOCATION OF ROCK LINE.
2. THE DRILLING SHALL ACHIEVE THE FOLLOWING MINIMUM ELEVATIONS BEFORE TERMINATION:
   ABUTMENT NO.1 = ELEV. 1883.00
   ABUTMENT NO. 2 = ELEV. 1890.00
   PIER NO. 1 = ELEV. 1890.00
3. THE PILE SHALL PLACED IN THE HOLE AND DRIVEN TO REFUSAL INTO COMPETENT ROCK.
4. THE HOLE SHALL BE BACKFILLED WITH PEA GRAVEL. THE TOP OF THE PILE SHALL BE BRACED IN A MANNER SO THAT ITS VERTICAL POSITION IN THE CENTER OF THE HOLE IS MAINTAINED.

BASIS FOR PAYMENT: THE COST OF MATERIAL AND LABOR FOR DRILLING THE 2'-0" DIAMETER HOLES SHALL BE INCLUDED IN ITEM NO. 204-15 - CORE DRILLING FOR PILES (SOIL). THE COST OF ALL OTHER MATERIAL AND LABOR NECESSARY FOR PILE DRIVING, BACKFILLING WITH PEA GRAVEL, BRACING OF THE PILES AND ANY OTHER INCIDENTALS REQUIRED FOR INSTALLATION OF THE PILES SHALL BE INCLUDED IN ITEM NO. 606-03.03: STEEL PILES (12 INCH).

ABUTMENTS ON FILL: THE FILLS AT THE ENDS OF THE BRIDGE SHALL BE IN PLACE AND THOROUGHLY COMPACTED BEFORE ANY ABUTMENT PILES ARE DRIVEN.

PARAPET SYSTEM: BUILD PARAPETS ACCORDING TO STANDARD DRAWING STD-1-1SS. THEPARAPETS SHALL BE FORMED AND CAST PLUMB, NOT PERPENDICULAR TO THE SLAB. THE DIMENSIONS AT THE TRAFFIC FACE SHALL BE KEPT CONSTANT, WITH VARIATION DUE TO CROSS-SLOPE ACCOMMODATED AT THE REAR FACE. DURING CONSTRUCTION, SIDEWALK TO BE BUILT IN THE FUTURE.

FINISHING CONCRETE SURFACES: CONCRETE FINISHING SHALL BE IN ACCORDANCE WITH SECTION 604.21 OF THE STANDARD SPECIFICATIONS. A CLASS I FINISH FOLLOWED BY AN APPLIED TEXTURE FINISH SHALL BE USED IN LIEU OF A CLASS II FINISH. NO TEXTURE FINISH SHALL BE APPLIED PRIOR TO COMPLETION OF PAVING AND HAULING OPERATIONS AT THE BRIDGE SITE. THE APPLIED TEXTURE FINISH SHALL BE MEASURED AND PAID FOR UNDER ITEM NO. 604-04.01.

VALUE ENGINEERING ALTERNATE BRIDGE DESIGN CRITERIA: ALTERNATE BRIDGE DESIGN PROPOSALS MAY NOT DIMINISH THE FUNCTIONAL OR STRUCTURAL EQUIVALENCY OF THE BRIDGE AND MUST MEET OR EXCEED THE CAPACITIES OF THE CONTRACT PLANS STRUCTURE AT ALL LIMIT STATES IN AASHTO TABLE 3.4.1-1. ADDITIONALLY, THE WATERWAY OPENING AND FLOOD CLEARANCES MAY NOT BE REDUCED. FOR GRADE SEPARATIONS, THE HORIZONTAL CLEARANCES MAY NOT BE REDUCED, NOR MAY THE VERTICAL CLEARANCES BE LESS THAN THE MINIMUM ACCEPTABLE FOR THE TYPE FACILITY CROSSED.

RIP-RAP: MACHINED RIP-RAP SHALL BE CLASS "C" IN ACCORDANCE WITH SECTION 709 OF THE STANDARD SPECIFICATIONS AND SHALL BE MEASURED AND PAID FOR UNDER ROADWAY ITEM NO. 709-05.09.

NOTE: SEE PROJECT COMMITMENTS AND SPECIAL PROVISION 202ACM.

ESTIMATED QUANTITIES

	ITEM NO.	DESCRIPTION	UNIT	TOTAL	SUPERSTRUCTURE	ABUT. NO. 1	PIER NO. 1	ABUT. NO. 2
①	202-01.02	REMOVAL OF ASBESTOS	L.S.	1				
②	202-04.01	REMOVAL OF STRUCTURE (EX. BR. NO. 86-SR107-05.22)	L.S.	1				
④	204-02.01	DRY EXCAVATION (BRIDGES)	C.Y.	176		88		88
④	204-03.01	WET EXCAVATION (BRIDGES)	C.Y.	94			94	
⑪	204-10.01	FOUNDATION PREPARATION (PR NO 1, STA 210+80.00)	L.S.	1				
	204-15	CORE DRILLING FOR PILES (SOIL)	L.F.	904		288	384	232
⑧	303-01.02	GRANULAR BACKFILL (BRIDGES)	TONS	30		15		15
	604-02.03	EPOXY COATED REINFORCING STEEL	LB.	48,378	45,062	1,658		1,658
⑦	604-03.01	CLASS "A" CONCRETE (BRIDGES)	C.Y.	154		42	71	42
	604-03.02	STEEL BAR REINFORCEMENT (BRIDGES)	LB.	26,409	531	5,104	15,670	5,104
③	604-03.04	PAVEMENT AT BRIDGE ENDS	S.Y.	230				
	604-03.09	CLASS "D" CONCRETE (BRIDGE DECK)	C.Y.	155	155			
	604-04.01	APPLIED TEXTURE FINISH (NEW STRUCTURES)	S.Y.	582	450	25	82	25
	604-05.31	BRIDGE DECK GROOVING (MECHANICAL)	S.Y.	776	776			
	606-03.03	STEEL PILES (12 INCH)	L.F.	1,176		320	624	232
⑨	606-03.06	PILE TIPS (STEEL PILES, 12 INCH)	EA.	40		8	24	8
⑤	615-02.05	PRESTRESSED CONCRETE BOX BEAM (33" X 36")	L.F.	578	578			
	620-05.01	CONC PARAPET SINGLE SLOPE (STD-1-1SS)	L.F.	289	289			
⑥	710-09.01	6" PERFORATED PIPE WITH VERTICAL DRAIN SYSTEM	L.F.	124		62		62
	710-09.02	6" PIPE UNDERDRAIN	L.F.	28		14		14

FOOTNOTES:

1. **NOTE:** SEE PROJECT COMMITMENTS AND SPECIAL PROVISION 202ACM.
2. **NOTE:** LUMP SUM, TO INCLUDE COMPLETE REMOVAL OF EXISTING BRIDGE NO. 86-SR107-05.22 TO NATURAL GROUND BETWEEN STA. 210+27 AND STA. 211+92. EXISTING BRIDGE CONSISTS OF 5 SPANS CONCRETE DECK GIRDERS WITH CONCRETE WALL PIER SUBSTRUCTURES. BRIDGE LENGTH IS 165'-0" AND 34'-6" WIDE.
3. **NOTE:** PRIOR TO CONSTRUCTION OF THE PAVEMENT AT BRIDGE ENDS, THE CONTRACTOR SHALL SUBMIT A PROPOSED BILL OF STEEL TO THE ENGINEER FOR APPROVAL.
4. **NOTE:** EXCAVATION BASED ON (FINAL PROFILE) AT ABUTMENTS AND (EXISTING GROUND) AT (PIERS).
5. **NOTE:** COST OF ELASTOMERIC PADS AND RUBBER BONDING CEMENT TO BE INCLUDED IN THE UNIT RICE BID FOR THE PRESTRESSED BEAM.
6. **NOTE:** COST OF POLYETHYLENE SHEETING AND ALL MISCELLANEOUS ITEMS NECESSARY FOR INSTALLATION TO BE INCLUDED IN THE UNIT PRICE BID FOR PERFORATED PIPE.
7. **NOTE:** THE COST OF ALL MATERIALS AND LABOR NECESSARY FOR THE INSTALLATION OF 15 ANCHOR BOLT ASSEMBLIES SHALL BE INCLUDED IN THE UNIT PRICE BID FOR CLASS A CONCRETE (BRIDGES), ITEM NO. 604-03.01.
8. **NOTE:** GRANULAR BACKFILL SHALL BE TYPE "A" GRADING "D" MATERIAL. SEE STANDARD DRAWING STD-10-1.
9. **NOTE:** THE UNIT PRICE BID FOR THE CAST STEEL POINTS SHALL INCLUDE FURNISHING AND INSTALLATION TO THE PILES.
10. **NOTE:** THE COST OF BITUMINOUS-FIBERBOARD AND ALL MISCELLANEOUS JOINT MATERIAL TO BE INCLUDED IN THE UNIT PRICE BID FOR OTHER ITEMS.

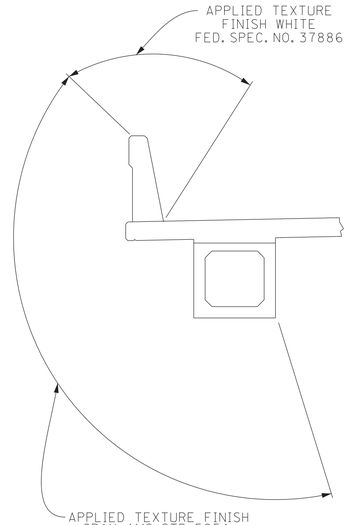

APPLIED TEXTURE FINISH SKETCH

NOTE: IN ADDITION TO THE SURFACES SHOWN IN THE APPLIED TEXTURE FINISH SKETCH ALL EXPOSED SURFACES OF THE WINGWALLS, ABUTMENT BEAMS, BENTS AND EXTERIOR PORTIONS OF ENDWALLS ARE TO RECEIVE AN APPLIED TEXTURE FINISH (GRAY, AMS-STD-595A, COLOR NO. 36440).

SEALED BY

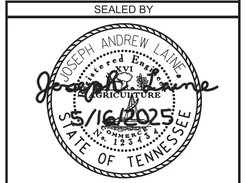

PIN NO.: 124631.00

DESIGN BY: JOSEPH LAINE DATE: 07/2023

DRAWN BY: J. STEVENS DATE: 08/2023

SUPERVISED BY: CDL/GWK DATE: 05/2024

CHECKED BY: J. SHOULDERS DATE: 05/2024

STATE OF TENNESSEE
DEPARTMENT OF TRANSPORTATION

GENERAL NOTES & ESTIMATED QUANTITIES
STATE ROUTE 107
(UNICOI DRIVE)
OVER NORTH INDIAN CREEK
BRIDGE ID NO. 86SR1070007
LOG MILE 5.22
STATION 210+80.00
UNICOI COUNTY
2024

U-94-385

$$$$$SYTIME$$$$$$$
$$$$$DGNSPEC$$$$$$$

CONST. NO.: 86006-3235-94

PROJECT NO.	YEAR	SHEET NO.
BR-STP-107-(28)	2024	

REVISIONS

NO.	DATE	BY	BRIEF DESCRIPTION

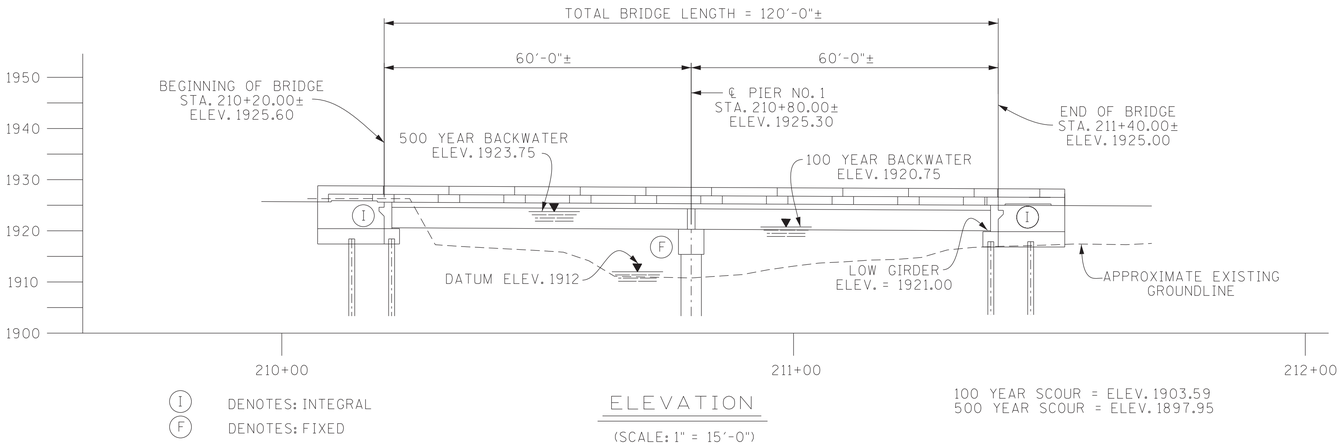

ELEVATION

(SCALE: 1" = 15'-0")

BORING	STATION	OFFSET DISTANCE	GROUND ELEVATION	ROCK ELEVATION	TOTAL DEPTH
B-1	210+34	7.1' LEFT	1916.8'	1879.6'	55.2'
B-2	210+35	7.5' RIGHT	1916.6'	1884.1'	56.2'
B-3	210+99	7.1' LEFT	1913.8'	1891.0'	54.3'
B-4	210+98	8' RIGHT	1912.7'	1871.4'	53.1'
B-5	211+40	7.6' LEFT	1917.0'	1891.9'	42.3'
B-6	211+41	7.7' RIGHT	1916.2'	1888.2'	36.5'

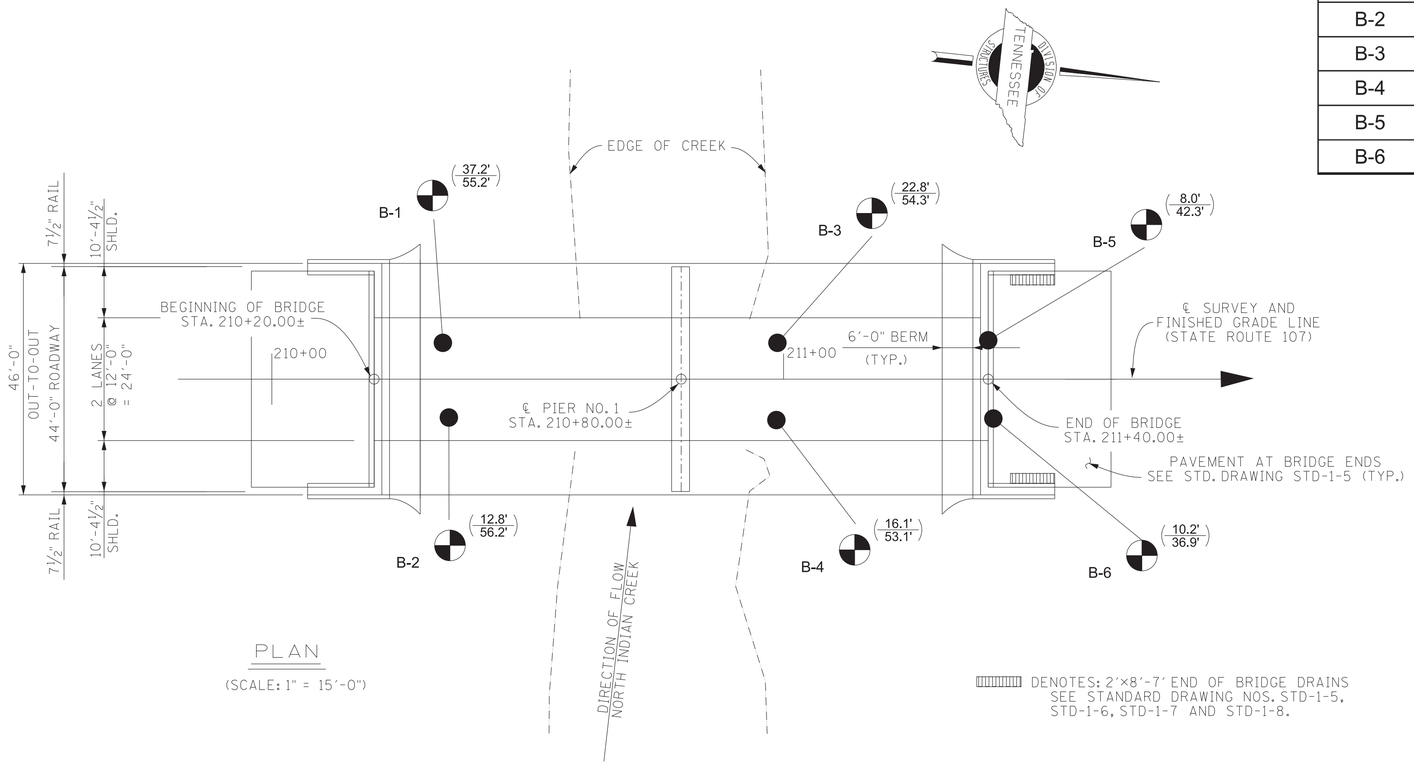

PLAN

(SCALE: 1" = 15'-0")

DENOTES: 2'×8'-7' END OF BRIDGE DRAINS SEE STANDARD DRAWING NOS. STD-1-5, STD-1-6, STD-1-7 AND STD-1-8.

NOTE: THIS DRAWING IS FOR FOUNDATION DATA ONLY AND IS NOT TO BE USED AS A LAYOUT.

LEGEND

B-1 (24.5' / 70.3') — BORING LOCATION. DEPTH TO REFUSAL (ABOVE LINE), BOTTOM OF HOLE (BELOW LINE)

PIN NO.: 124631.00

DESIGN BY:	JOSEPH LAINE	DATE: 07/2023
DRAWN BY:	GEORGE KORNIKOSKI	DATE: 05/2024
SUPERVISED BY:	CDL/GWK	DATE: 05/2024
CHECKED BY:	J. SHOULDERS	DATE: 05/2024

STATE OF TENNESSEE
DEPARTMENT OF TRANSPORTATION

FOUNDATION DATA
STATE ROUTE 107
(UNICOI DRIVE)
OVER NORTH INDIAN CREEK
BRIDGE ID NO. 86SR1070007
LOG MILE 5.22
STATION 210+80.00
UNICOI COUNTY
2024

U-94-386

$$$$SYTIMES$$$$$$
$$$$DGNSPEC$$$$$$

CONST. NO.: 86006-3235-94

PROJECT NO.	YEAR	SHEET NO.
BR-STP-107-(28)	2024	

REVISIONS

NO.	DATE	BY	BRIEF DESCRIPTION

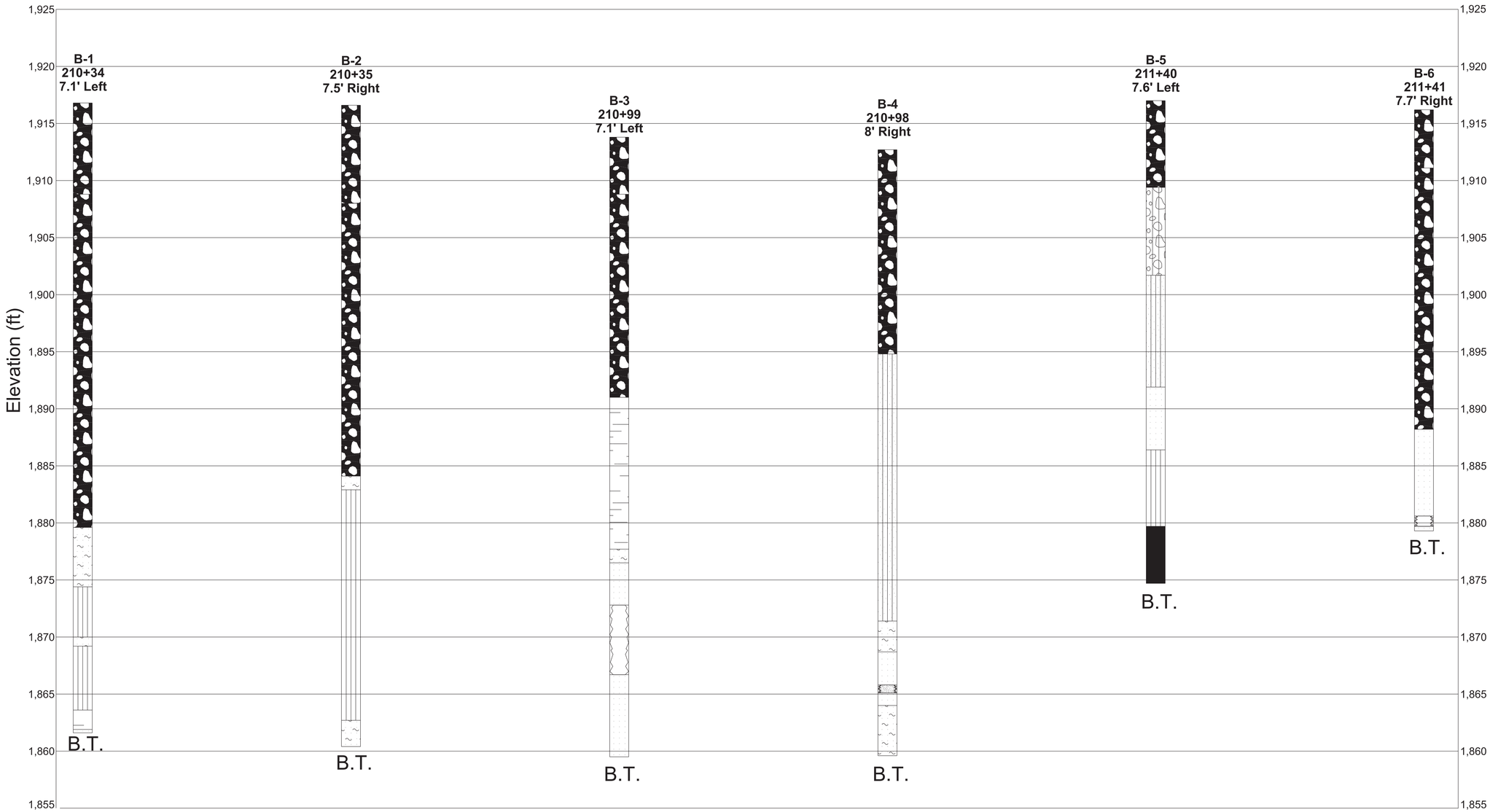

LEGEND

- NO CORE RECOVERED
- CAVITY OR VOID
- SOIL FILLED VOID (TYPE A MATERIAL)
- SILT WITH SHALE FRAGMENTS (TYPE A MATERIAL)
- SILTY SAND (TYPE A MATERIAL)
- SILT WITH COBBLES (TYPE A MATERIAL)
- BOULDERS AND COBBLES (TYPE A MATERIAL)
- WEATHERED SHALE (TYPE D MATERIAL)
- WEATHERED SANDSTONE (TYPE D MATERIAL)
- SANDSTONE (TYPE B MATERIAL)

TYPE MATERIAL-SEE DEFINITION OF EARTHWORK TERMS ON GEOTECHNICAL NOTES AND EST. QTYS. SHEET.

B.T.= BORING TERMINATED

PIN NO.: 124631.00

DESIGN BY:	JOSEPH LAINE	DATE: 07/2023
DRAWN BY:	GEORGE KORNIKOSKI	DATE: 05/2024
SUPERVISED BY:	CDL/GWK	DATE: 05/2024
CHECKED BY:	J. SHOULDERS	DATE: 05/2024

STATE OF TENNESSEE
DEPARTMENT OF TRANSPORTATION

FOUNDATION DATA
STATE ROUTE 107
(UNICOI DRIVE)
OVER NORTH INDIAN CREEK
BRIDGE ID NO. 86SR1070007
LOG MILE 5.22
STATION 210+80.00
UNICOI COUNTY
2024

U-94-387

$$$$SYTIMES$$$$$$
$$$$DGNSPEC$$$$$$

CONST. NO.: 86006-3235-94

PROJECT NO.	YEAR	SHEET NO.
BR-STP-107-(28)	2024	

REVISIONS

NO.	DATE	BY	BRIEF DESCRIPTION

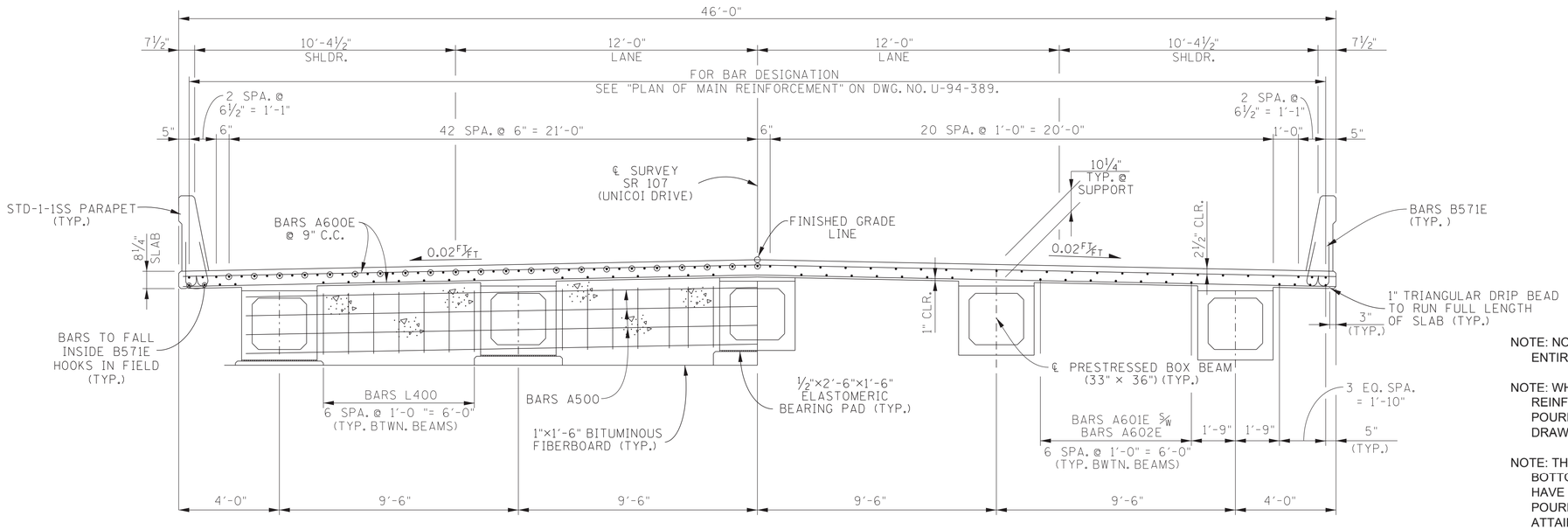

TYPICAL AT PIER

TYPICAL AT MIDSPAN

◉ DENOTES: CUT-OFF BARS

NOTE: NO PORTION OF THE BRIDGE RAILS SHALL BE POURED UNTIL THE ENTIRE DECK SLAB IS IN PLACE.

NOTE: WHEN POURING SLAB, PROVISIONS SHALL BE MADE FOR SETTING REINFORCING STEEL FOR BRIDGE RAIL. THE BRIDGE RAIL SHALL NOT BE POURED UNTIL THE SLAB IS POURED AND CURED. ALSO SEE STANDARD DRAWING STD-1-1SS.

NOTE: THE SUPPORT DIAPHRAGM AT PIER SHALL BE FORMED AND THE BOTTOM 15 INCHES POURED AS SOON AS POSSIBLE AFTER THE BEAMS HAVE BEEN SET. THE REMAINDER OF THE DIAPHRAGM SHALL BE POURED CONCURRENTLY WITH THE DECK SLAB. THE BEAMS SHALL ATTAIN AN AGE OF AT LEAST 90 DAYS PRIOR TO POURING THE REMAINDER OF THE SUPPORT DIAPHRAGM AND DECK SLAB. ALL DIAPHRAGM CONCRETE SHALL BE INCLUDED IN THE QUANTITY FOR ITEM 604-03-09.

TYPICAL CROSS SECTION
(LOOKING FORWARD ON SURVEY)

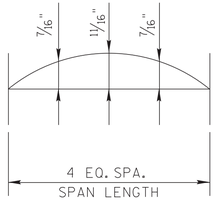

DEAD LOAD CORRECTION CURVE

THIS CURVE IS FOR DEAD LOAD SLAB AND ALL DEAD LOADS THAT ARE APPLIED AFTER THE SLAB IS IN PLACE.

IF PRESTRESSED DECK PANELS ARE USED AND THE BEAMS ARE PROFILED AFTER PANELS ARE IN PLACE, REDUCE THE DEAD LOAD CORRECTION VALUES SHOWN BY 25%.

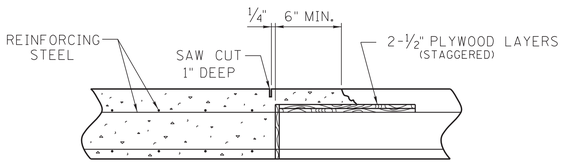

SLAB CONSTRUCTION JOINT DETAIL

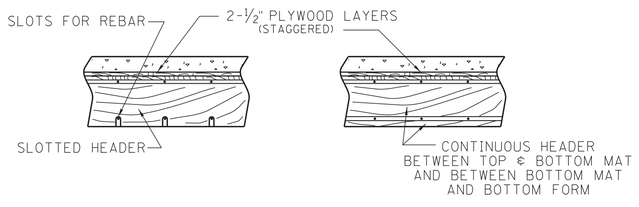

ALTERNATE "A" ALTERNATE "B"

ALTERNATE HEADER DETAILS

DECK CONCRETE POURING SEQUENCE:

SLAB CONSTRUCTION JOINTS MAY BE LOCATED AT THE CONTRACTOR'S OPTION TO THE FOLLOWING:

1) NO CONSTRUCTION JOINT SHALL BE LOCATED CLOSER THAN 10 FEET OR FURTHER THAN 15 FEET FROM AN INTERIOR SUPPORT.
2) THE SLAB IN THE MIDDDLE SECTION OF BOTH ADJACENT SPANS MUST BE POURED TO WITHIN AT LEAST 15 FEET OF THE SUPPORTS EITHER PRIOR TO OR CONCURRENTLY WITH THE SLAB OVER AN INTERIOR SUPPORT.

ALL SLAB CONSTRUCTION JOINTS SHALL BE IN ACCORDANCE WITH THE SLAB CONSTRUCTION JOINT DETAILS SHOWN ON THIS SHEET.

ESTIMATED QUANTITIES		
CONCRETE CLASS "D" (BRIDGE DECK) C.Y.	EPOXY COATED REINFORCING STEEL LB.	STEEL BAR REINFORCMENT LB.
155	45,062	531

SEALED BY

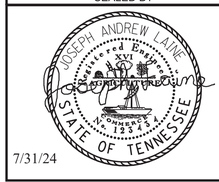

7/31/24

PIN NO.: 124631.00

DESIGN BY:	JOSEPH LAINE	DATE: 07/2023
DRAWN BY:	GEORGE KORNIKOSKI	DATE: 08/23
SUPERVISED BY:	CDL/GWK	DATE: 05/2024
CHECKED BY:	J. SHOULDERS	DATE: 05/2024

STATE OF TENNESSEE
DEPARTMENT OF TRANSPORTATION

SUPERSTRUCTURE
STATE ROUTE 107
(UNICOI DRIVE)
OVER NORTH INDIAN CREEK
BRIDGE ID NO. 86SR1070007
LOG MILE 5.22
STATION 210+80.00
UNICOI COUNTY
2024

U-94-388

$$$$SYTTIMES$$$$$$
$$$$DGNSPEC$$$$$$

CONST. NO.: 86006-3235-94

PROJECT NO.	YEAR	SHEET NO.
BR-STP-107-(28)	2024	

REVISIONS

NO.	DATE	BY	BRIEF DESCRIPTION

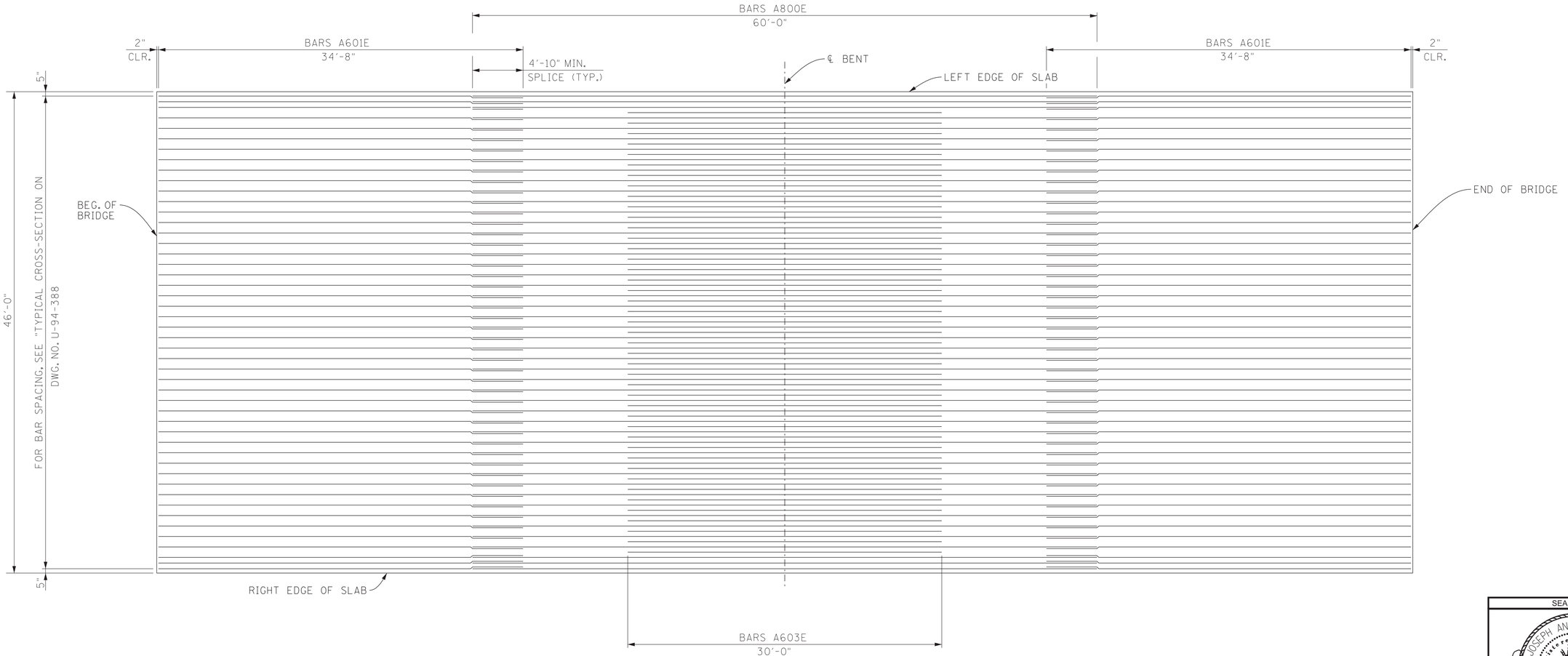

PLAN OF MAIN REINFORCEMENT

(BARS SHOWN TOP OF SLAB ONLY)

SEALED BY

JOSEPH ANDREW LAINE
LICENSED PROFESSIONAL ENGINEER
STATE OF TENNESSEE

7/31/24

STATE OF TENNESSEE
DEPARTMENT OF TRANSPORTATION

SUPERSTRUCTURE DETAILS
STATE ROUTE 107
(UNICOI DRIVE)
OVER NORTH INDIAN CREEK
BRIDGE ID NO. 86SR1070007
LOG MILE 5.22
STATION 210+80.00
UNICOI COUNTY
2024

U-94-389

PIN NO.:	124631.00		
DESIGN BY:	JOSEPH LAINE	DATE:	07/2023
DRAWN BY:	GEORGE KORNIKOSKI	DATE:	08/23
SUPERVISED BY:	CDL/GWK	DATE:	05/2024
CHECKED BY:	J. SHOULDERS	DATE:	05/2024

$$$$SSYTIME$$$$$$$
$$$$DGNSPECS$$$$$$$

CONST. NO.: 86006-3235-94

PROJECT NO.	YEAR	SHEET NO.
BR-STP-107-(28)	2024	

REVISIONS

NO.	DATE	BY	BRIEF DESCRIPTION

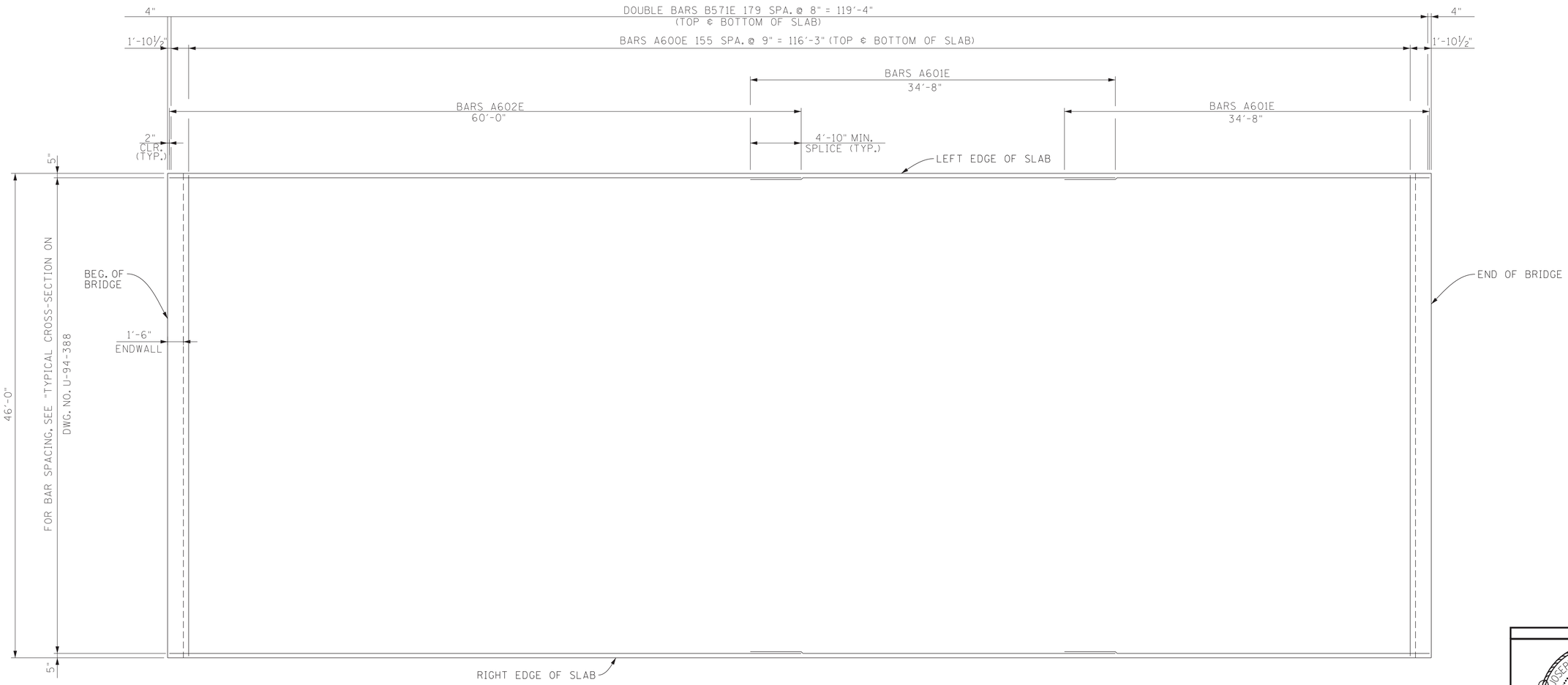

SLAB PLAN

(BARS SHOWN BOTTOM OF SLAB)

SEALED BY

JOSEPH ANDREW LAINE
REGISTERED ENGINEER
No. 121334
STATE OF TENNESSEE

7/31/24

STATE OF TENNESSEE
DEPARTMENT OF TRANSPORTATION

SUPERSTRUCTURE DETAILS
STATE ROUTE 107
(UNICOI DRIVE)
OVER NORTH INDIAN CREEK
BRIDGE ID NO. 86SR1070007
LOG MILE 5.22
STATION 210+80.00
UNICOI COUNTY
2024

U-94-390

PIN NO.: 124631.00

DESIGN BY:	JOSEPH LAINE	DATE:	07/2023
DRAWN BY:	GEORGE KORNIKOSKI	DATE:	08/23
SUPERVISED BY:	CDL/GWK	DATE:	05/2024
CHECKED BY:	J. SHOULDERS	DATE:	05/2024

$$$$SYTIME$$$$$$$
$$$$DGNSPEC$$$$$$$

CONST. NO.: 86006-3235-94

PROJECT NO.	YEAR	SHEET NO.
BR-STP-107-(28)	2024	

REVISIONS

NO.	DATE	BY	BRIEF DESCRIPTION

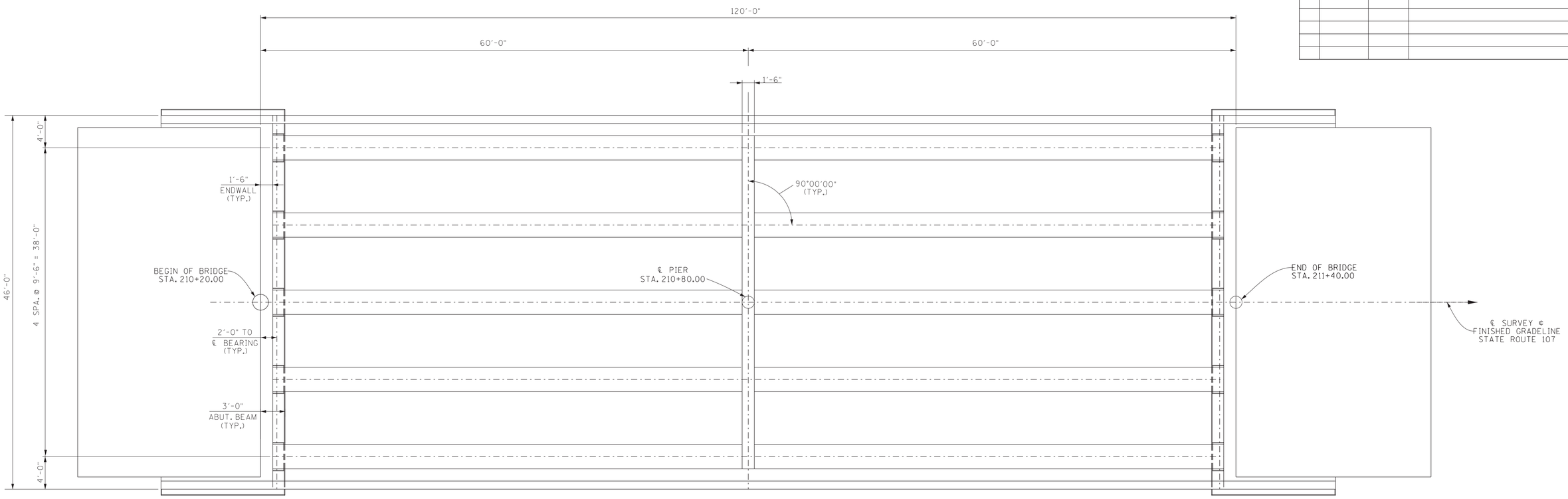

FRAMING PLAN

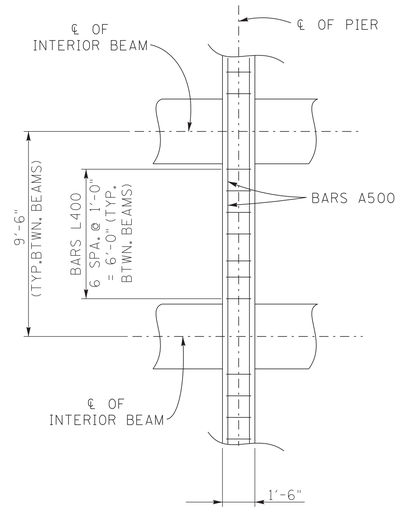

PART-PLAN
OF DIAPHRAGM

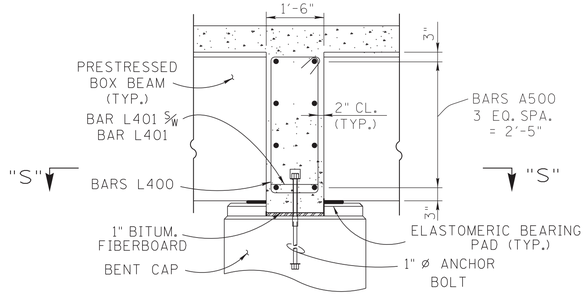

SECTION "A"-"A"

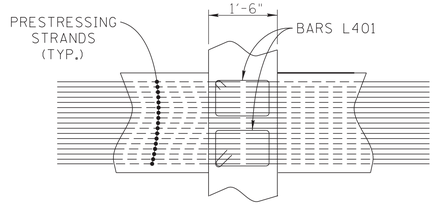

SECTION "S"-"S"

SPECIAL NOTE FOR ANCHOR BOLTS AT PIER: ANCHOR BOLT ASSEMBLIES AT PIER SHALL BE IN ACCORDANCE WITH STANDARD DRAWING STD-6-1.

SEALED BY

JOSEPH ANDREW LAINE
REGISTERED PROFESSIONAL ENGINEER
XXVI
STATE OF TENNESSEE
7/31/24

STATE OF TENNESSEE
DEPARTMENT OF TRANSPORTATION

SUPERSTRUCTURE DETAILS
STATE ROUTE 107
(UNICOI DRIVE)
OVER NORTH INDIAN CREEK
BRIDGE ID NO. 86SR1070007
LOG MILE 5.22
STATION 210+80.00
UNICOI COUNTY
2024

U-94-391

PIN NO.:	124631.00		
DESIGN BY:	JOSEPH LAINE	DATE:	07/2023
DRAWN BY:	GEORGE KORNIKOSKI	DATE:	08/23
SUPERVISED BY:	CDL/GWK	DATE:	05/2024
CHECKED BY:	J. SHOULDERS	DATE:	05/2024

$$$$SYTIME$$$$$$
$$$$DGNSPECS$$$$$$

CONST. NO.: 86006-3235-94

PROJECT NO.	YEAR	SHEET NO.
BR-STP-107-(28)	2024	

REVISIONS

NO.	DATE	BY	BRIEF DESCRIPTION

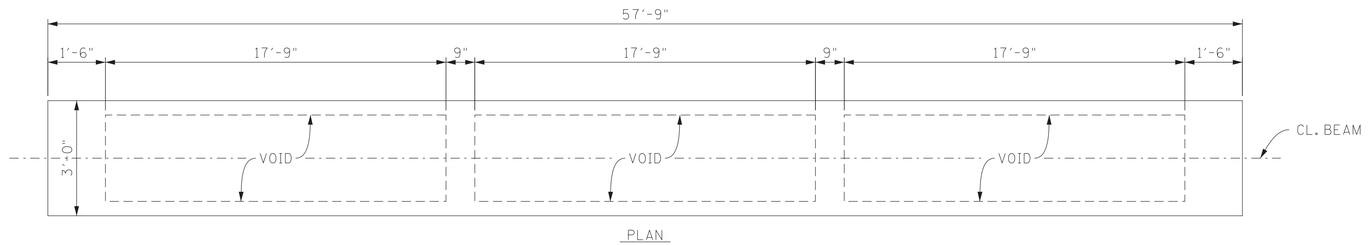

PLAN

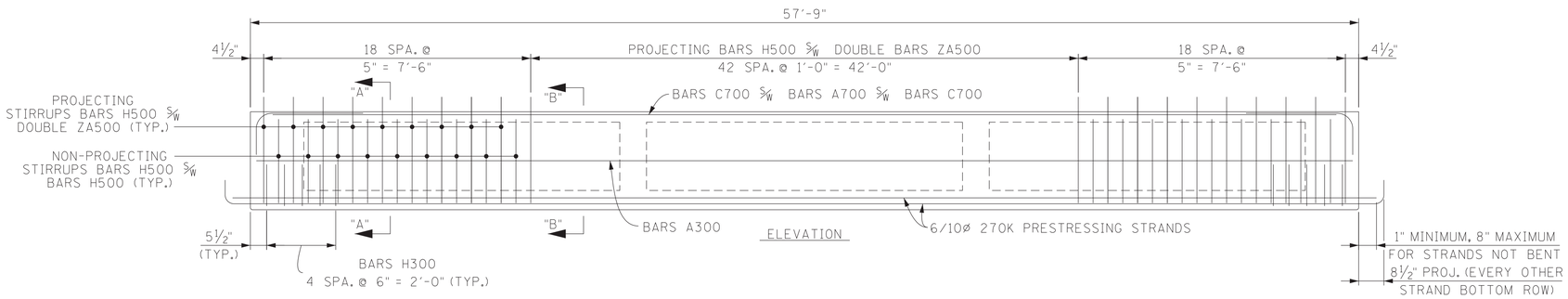

ELEVATION

PRESTRESSED BEAM DESIGN DATA – PRE BEAM

LIVE LOAD DISTRIBUTION FACTORS IN LANES:

INTERIOR BEAM LLDF	EXTERIOR BEAM LLDF
MOMENT – 2+ LANES	MOMENT – 2+ LANES
LOADED: 0.70	LOADED: 0.72
1 LANE	1 LANE
LOADED: 0.44	LOADED: 0.95
SHEAR – 2+ LANES	SHEAR – 2+ LANES
LOADED: 0.90	LOADED: 0.87
1 LANE	1 LANE
LOADED: 0.71	LOADED: 0.95

COMPOSITE DEAD LOADS:
DC = 468 LB/FT PER BEAM
DW = 302 LB/FT PER BEAM

COMPOSITE DISIGN SLAB STRENGTH: 4,000 PSI.

DOWNWARD DEFLECTION UNDER TOTAL DL IS NOT ALLOWED.

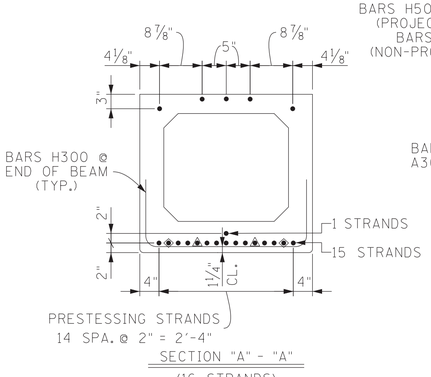

SECTION "A" - "A"
(16 STRANDS)

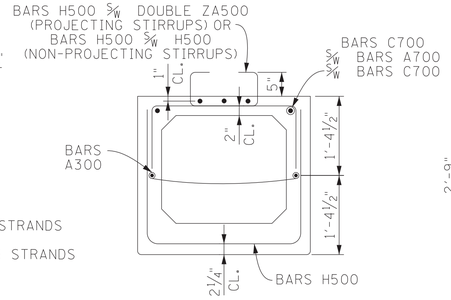

SECTION "A" - "A"
(SHOWING REINFORCEMENT)

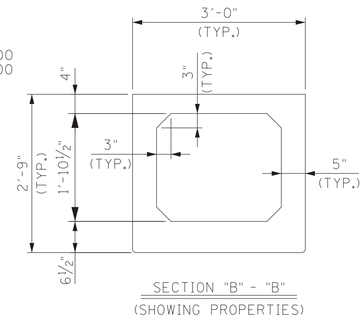

SECTION "B" - "B"
(SHOWING PROPERTIES)

△ DENOTES: BREAK BOND 3'-0" FROM END OF BEAM
◇ DENOTES: BREAK BOND 6'-0" FROM END OF BEAM

GENERAL NOTES:

NOTE: SEE STD-14-3 FOR PRESTRESSED BOX BEAM STANDARD DETAILS, NOTES, AND REINFORCING. REINFORCING DETAILS ON THIS SHEET SUPERSEDE STD-14-3 DEATILS

NOTE: THE BEAM CONCRETE SHALL ATTAIN A COMPRESSIVE STRENGTH OF NOT LESS THAN 4,500 PSI AT 28 DAYS AND STRESS TRANSFER SHALL NOT BE MADE UNTIL CONCRETE TEST SPECIMENS HAVE REACHED A COMPRESSIVE STRENGTH OF AT LEAST 7,000 PSI.

NOTE: PRESTRESSING STRANDS: ALL STRANDS SHALL BE 6/10" DIAMETER, UNCOATED 7-WIRE STRANDS, ASTM A416 GRADE 270, LOW-LAX,A = 0.217 SQ. IN. PULLED TO 43,943 LBS PER STRAND UNLESS OTHERWISE NOTED.

NOTE: ALL BEAMS TO BE 33" X 36" PRESTRESSED BOX BEAMS.

SEALED BY

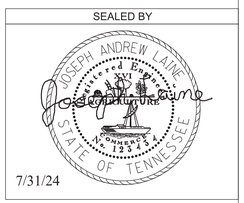

7/31/24

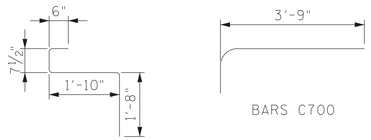

BARS ZA500

BARS C700

BILL OF STEEL (PER BEAM)			
BARS	SIZE	NO. REQ'D	LENGTH
A300	3	2	57'-5"
A500	5	12	5'-6"
A501	5	8	2'-8"
A502	5	8	2'-5"
A700	7	5	56'-6"
C700	7	10	4'-11"
H300	3	10	4'-9"
H500	5	97	7'-5"
ZA500	5	122	4'-6"

ESTIMATED QUANTITIES (PER BEAM)		
PRESTRESSING STRANDS (LOW RELAXATION) LB.	CONCRETE C.Y.	REINFORCING STEEL LB.
690	9.7	2,173

PIN NO.: 124631.00
DESIGN BY: JOSEPH LAINE DATE: 07/2023
DRAWN BY: J. STEVENS DATE: 08/2023
SUPERVISED BY: CDL/GWK DATE: 05/2024
CHECKED BY: J. SHOULDERS DATE: 05/2024

STATE OF TENNESSEE
DEPARTMENT OF TRANSPORTATION
PRESTRESSED BOX BEAM DETAILS
STATE ROUTE 107
(UNICOI DRIVE)
OVER NORTH INDIAN CREEK
BRIDGE ID NO. 86SR1070007
LOG MILE 5.22
STATION 210+80.00
UNICOI COUNTY
2024

U-94-392

$$$$SYTIME$$$$$$$
$$$DGNSPEC$$$$$$$

$$$$SYTIME$$$$$$$

$$$$DGNSPECS$$$$$$$

CONST. NO.: 86006-3235-94

PROJECT NO.	YEAR	SHEET NO.
BR-STP-107-(28)	2024	

REVISIONS

NO.	DATE	BY	BRIEF DESCRIPTION

F.S. DENOTES: FAR SIDE
N.S. DENOTES: NEAR SIDE
P.C.O. DENOTES: PILE CUT OFF

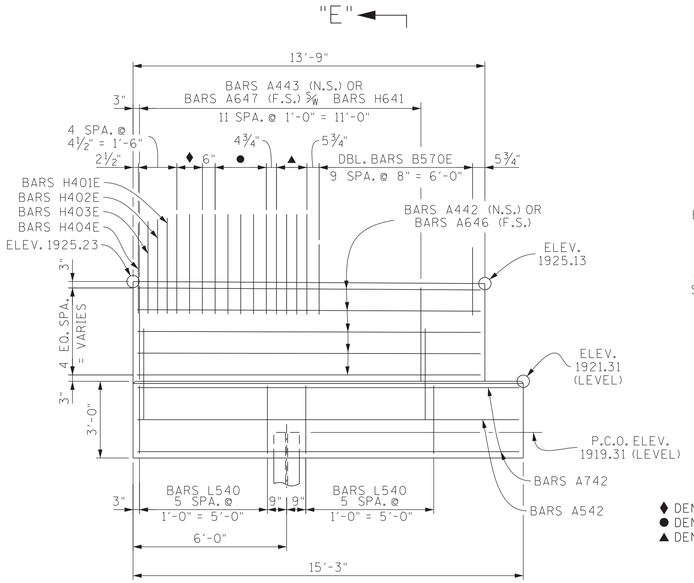

ELEVATION "A"-"A"

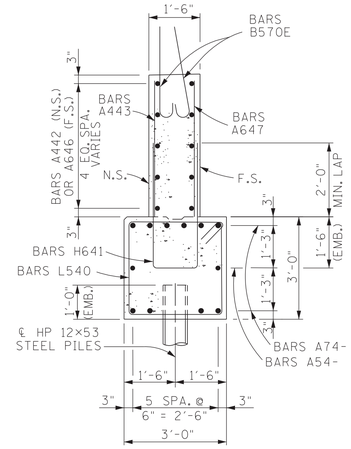

SECTION "E"-"E"

◆ DENOTES: BARS H400E - 2 SPA. @ 6" = 1'-0"
● DENOTES: SERIES BARS HA401E - 4 SPA. @ 6" = 2'-0"
▲ DENOTES: SERIES BARS HA400E - 3 SPA. @ 4¾" = 1'-2¼"

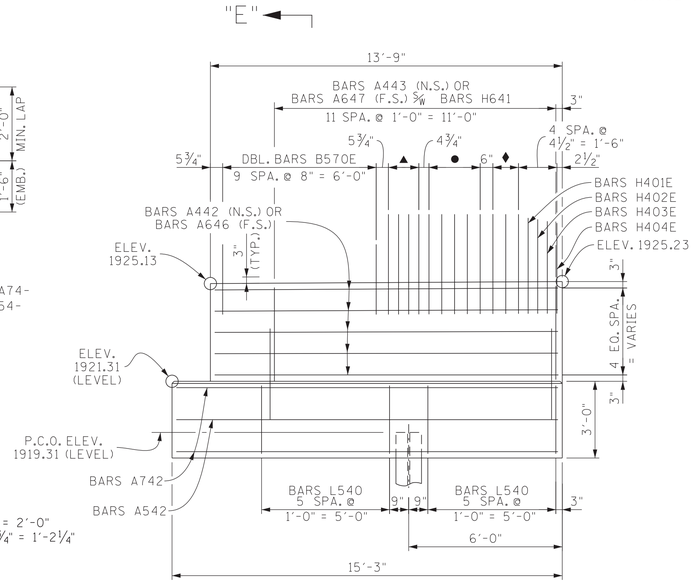

ELEVATION "B"-"B"

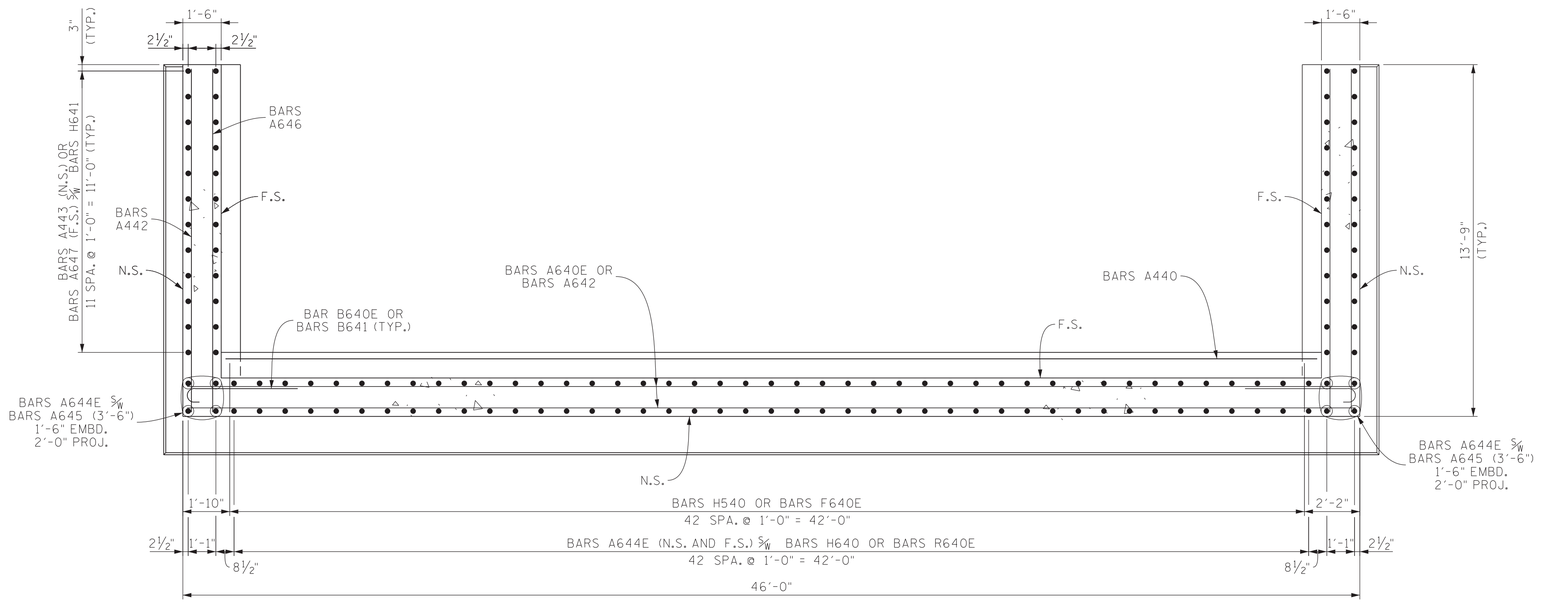

SECTION "D"-"D"

SEALED BY

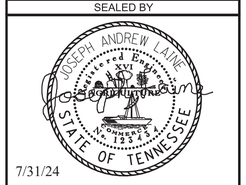

7/31/24

PIN NO.: 124631.00
DESIGN BY: JOSEPH LAINE DATE: 07/2023
DRAWN BY: RODNEY CHANDLER DATE: 08/ 23
SUPERVISED BY: CDL/GWK DATE: 05/2024
CHECKED BY: J. SHOULDERS DATE: 05/2024

STATE OF TENNESSEE
DEPARTMENT OF TRANSPORTATION

ABUTMENT NO. 1 DETAILS
STATE ROUTE 107
(UNICOI DRIVE)
OVER NORTH INDIAN CREEK
BRIDGE ID NO. 86SR1070007
LOG MILE 5.22
STATION 210+80.00
UNICOI COUNTY
2024

U-94-394

$$$$SYTIME$$$$$$$
$$$DGNSPEC$$$$$$$

CONST. NO.: 86006-3235-94

PROJECT NO.	YEAR	SHEET NO.
BR-STP-107-(28)	2024	

REVISIONS

NO.	DATE	BY	BRIEF DESCRIPTION

F.S. DENOTES: FAR SIDE
N.S. DENOTES: NEAR SIDE
P.C.O. DENOTES: PILE CUT OFF

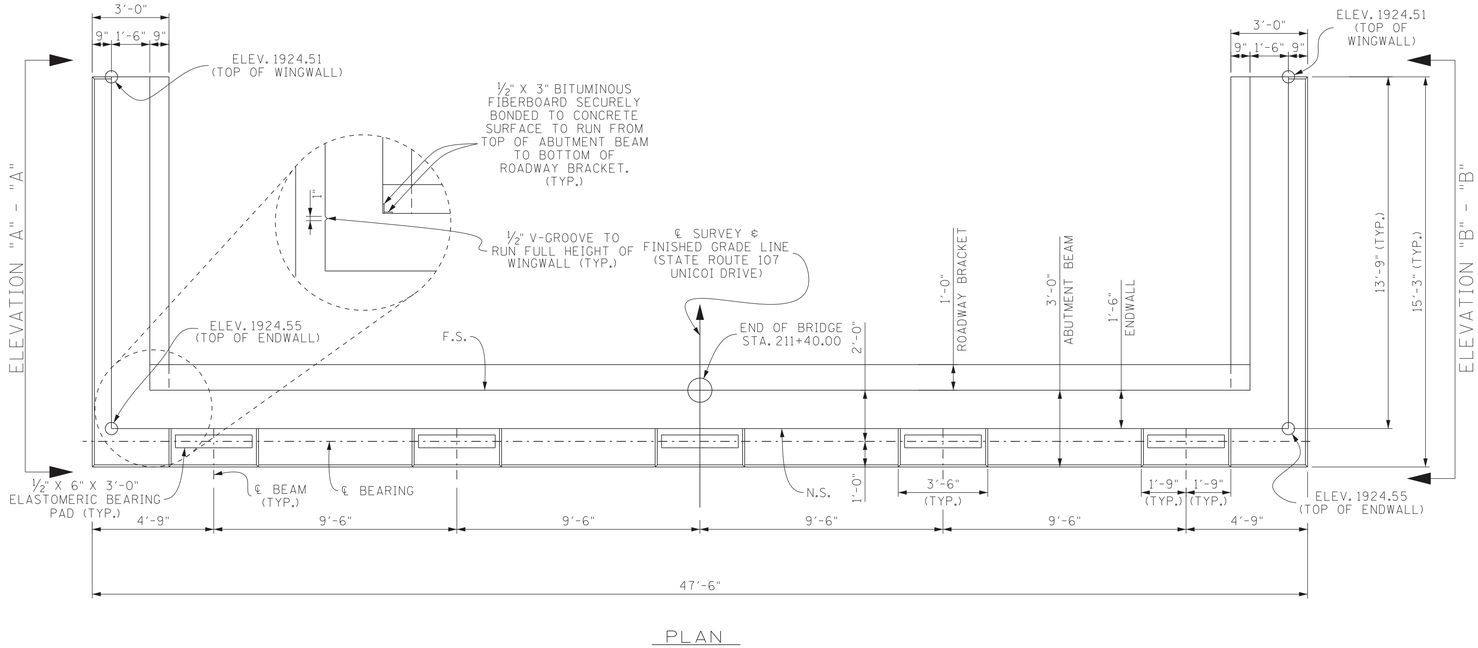

PLAN

ABUTMENT GENERAL NOTES

NOTE: WHEN POURING WINGWALLS, PROVISIONS SHALL BE MADE FOR SETTING REINFORCING STEEL FOR WINGPOSTS AND BRIDGE RAILS. FOR DETAILS OF WINGPOST AND BRIDGE RAIL SEE STANDARD DWG. NO. STD-1-1SS.

NOTE: RISER BLOCKS SHALL BE POURED MONOLITHICALLY WITH THE ABUTMENT BEAM.

NOTE: COST OF BRIDGE RAIL AND POST IS TO BE INCLUDED IN THE UNIT PRICE BID FOR THE BRIDGE RAIL SYSTEM.

NOTE: ELASTOMERIC PADS SHALL BE IN PLACE A MINIMUM OF ONE DAY BEFORE BEING DISTURBED BY SETTING BEAMS. PLACE RUBBER BONDING CEMENT IN SUCH A WAY THAT VISIBLE CONCRETE SURFACES WILL NOT BE STAINED.

NOTE: NOT LESS THAN HALF OF THE SLAB SHALL BE POURED PRIOR TO, OR CONCURRENTLY WITH, PLACEMENT OF ANY PART OF THE ABUTMENT BACKWALL. AT LEAST THE TOP 12 INCHES OF THE BACKWALL SHALL BE POURED CONCURRENTLY WITH THE END OF SLAB.

NOTE: WINGBEAM PILES SHALL BE DRIVEN TO THE PLANS TIP ELEVATION OR REFUSAL. SEISMIC ATTACHMENT IS NOT REQUIRED FOR WINGBEAM PILES.

NOTE: FOR ELEVATION "A"-"A", ELEVATION "B"-"B" AND SECTION "D"-"D' SEE DWG. NO. U-94-396.

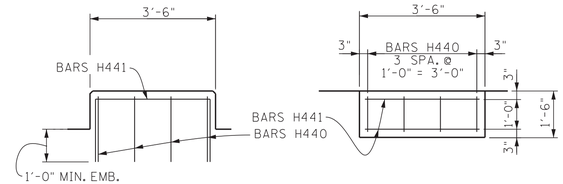

ELEVATION PLAN

RISER BLOCK REINFORCING DETAIL

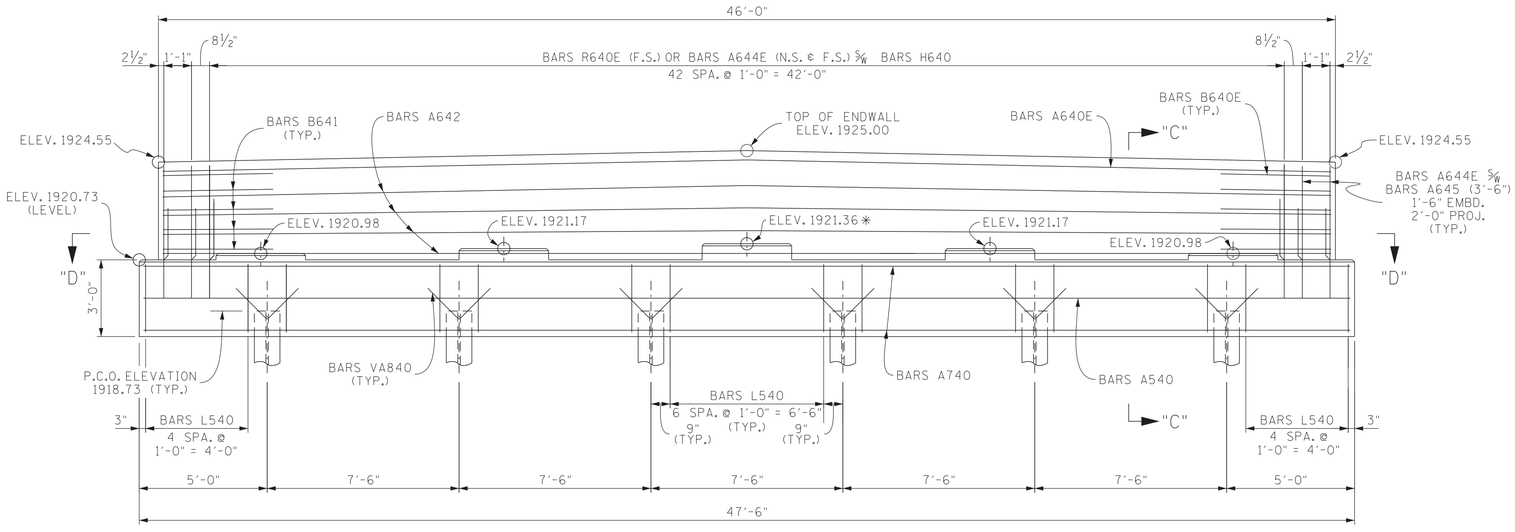

*DENOTES: RISER BLOCK TO BE REINFORCED.
SEE RISER BLOCK REINFORCING DETAIL THIS SHEET.

ELEVATION
(LOOKING FORWARD ON SURVEY)

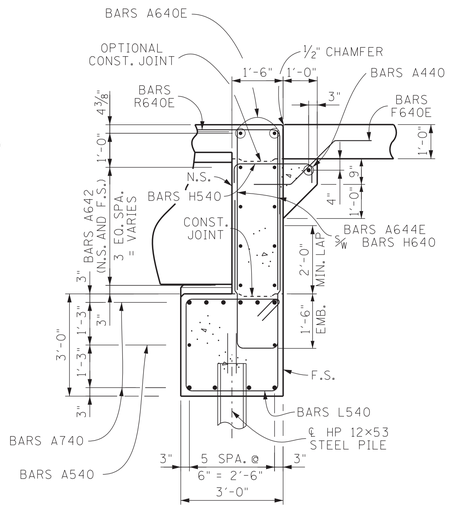

SECTION "C"-"C"

ESTIMATED QUANTITIES

CLASS "A" CONCRETE (BRIDGES) C.Y.	STEEL BAR REINFORCEMENT (BRIDGES) LB.	EPOXY COATED REINFORCING STEEL (BRIDGES) LB.
42	5,104	1,658

SEALED BY

JOSEPH ANDREW LAINE
REGISTERED
NOVEMBER 5
STATE OF TENNESSEE
7/31/24

STATE OF TENNESSEE
DEPARTMENT OF TRANSPORTATION
ABUTMENT NO. 2
STATE ROUTE 107
(UNICOI DRIVE)
OVER NORTH INDIAN CREEK
BRIDGE ID NO. 86SR1070007
LOG MILE 5.22
STATION 210+80.00
UNICOI COUNTY
2024

U-94-395

PIN NO.: 124631.00
DESIGN BY: JOSEPH LAINE DATE: 07/2023
DRAWN BY: RODNEY CHANDLER DATE: 08/ 23
SUPERVISED BY: CDL/GWK DATE: 05/2024
CHECKED BY: J. SHOULDERS DATE: 05/2024

$$$$SYTIME$$$$$$$$
$$$$DGNSPEC$$$$$$$$

CONST. NO.: 86006-3235-94

PROJECT NO.	YEAR	SHEET NO.
BR-STP-107-(28)	2024	

REVISIONS

NO.	DATE	BY	BRIEF DESCRIPTION

F.S. DENOTES: FAR SIDE
N.S. DENOTES: NEAR SIDE
P.C.O. DENOTES: PILE CUT OFF

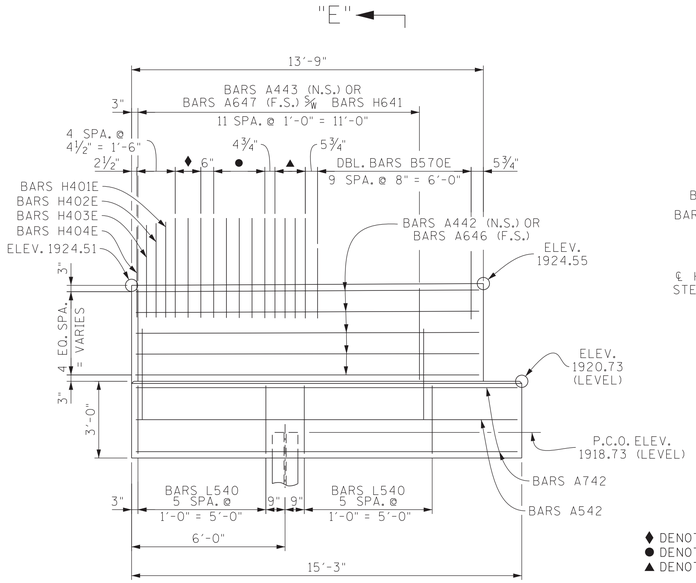

ELEVATION "A"-"A"

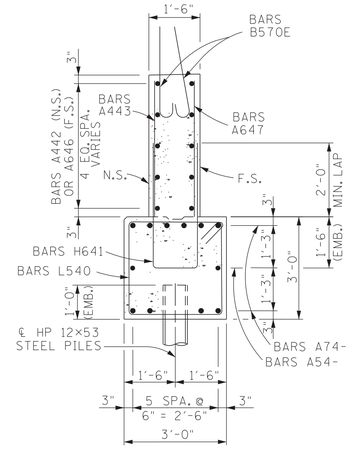

SECTION "E"-"E"

♦ DENOTES: BARS H400E - 2 SPA. @ 6" = 1'-0"
● DENOTES: SERIES BARS HA401E - 4 SPA. @ 6" = 2'-0"
▲ DENOTES: SERIES BARS HA400E - 3 SPA. @ 4¾" = 1'-2¼"

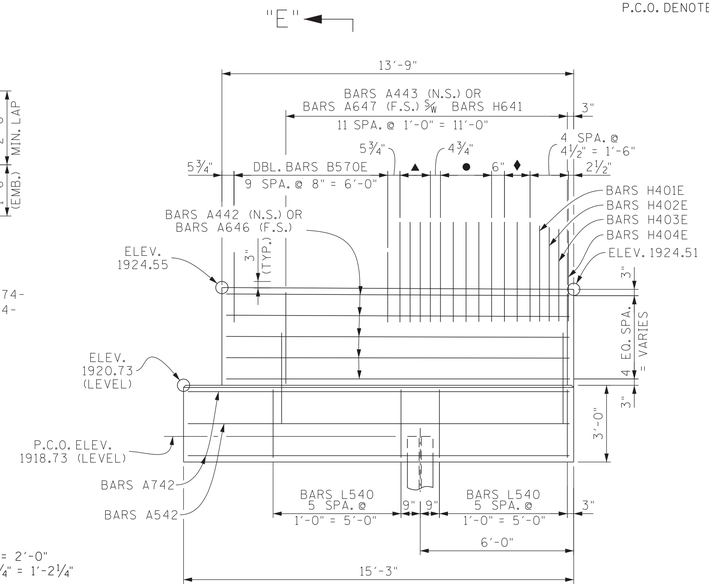

ELEVATION "B"-"B"

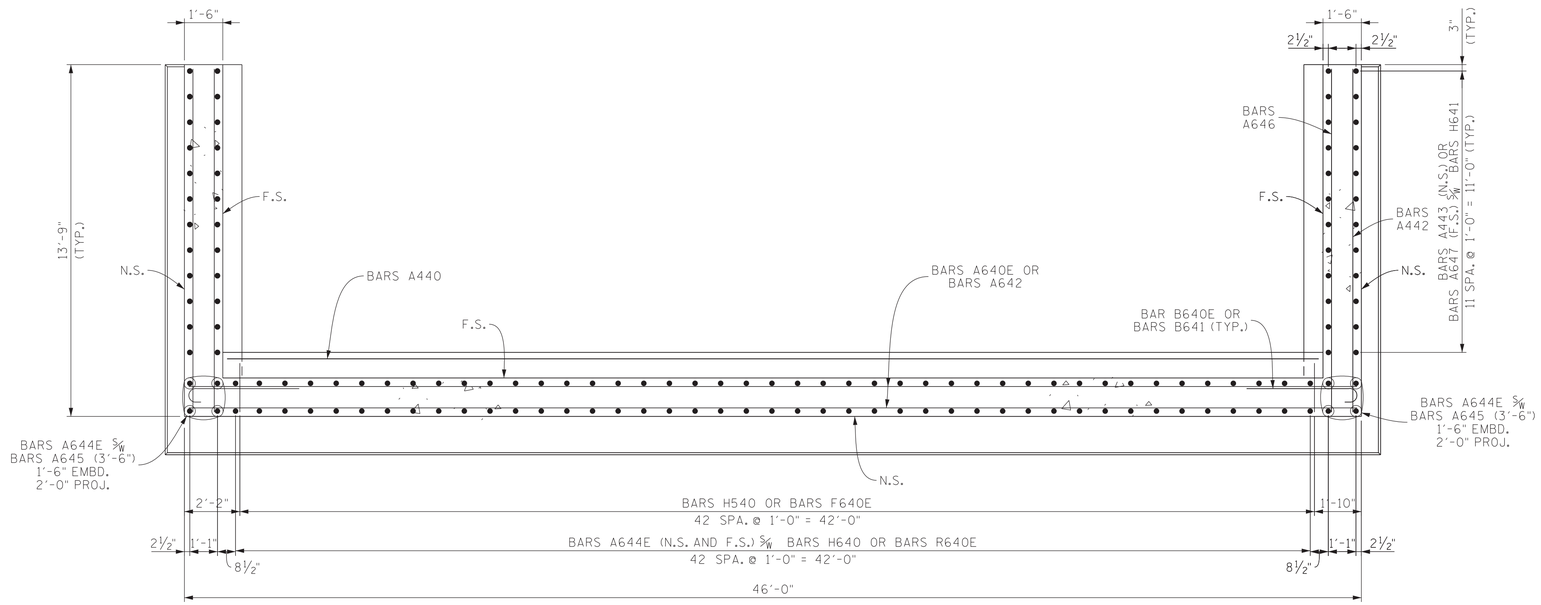

SECTION "D"-"D"

SEALED BY

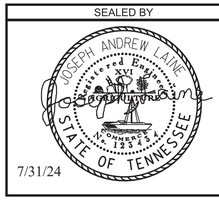

PIN NO.: 124631.00

DESIGN BY:	JOSEPH LAINE	DATE:	07/2023
DRAWN BY:	RODNEY CHANDLER	DATE:	08/ 23
SUPERVISED BY:	CDL/GWK	DATE:	05/2024
CHECKED BY:	J. SHOULDERS	DATE:	05/2024

STATE OF TENNESSEE
DEPARTMENT OF TRANSPORTATION

ABUTMENT NO. 2 DETAILS
STATE ROUTE 107
(UNICOI DRIVE)
OVER NORTH INDIAN CREEK
BRIDGE ID NO. 86SR1070007
LOG MILE 5.22
STATION 210+80.00
UNICOI COUNTY
2024

U-94-396

$$$$SYTIME$$$$$$$
$$$DGNSPEC$$$$$$$

CONST. NO.: 86006-3235-94

PROJECT NO.	YEAR	SHEET NO.
BR-STP-107-(28)	2024	

REVISIONS

NO.	DATE	BY	BRIEF DESCRIPTION

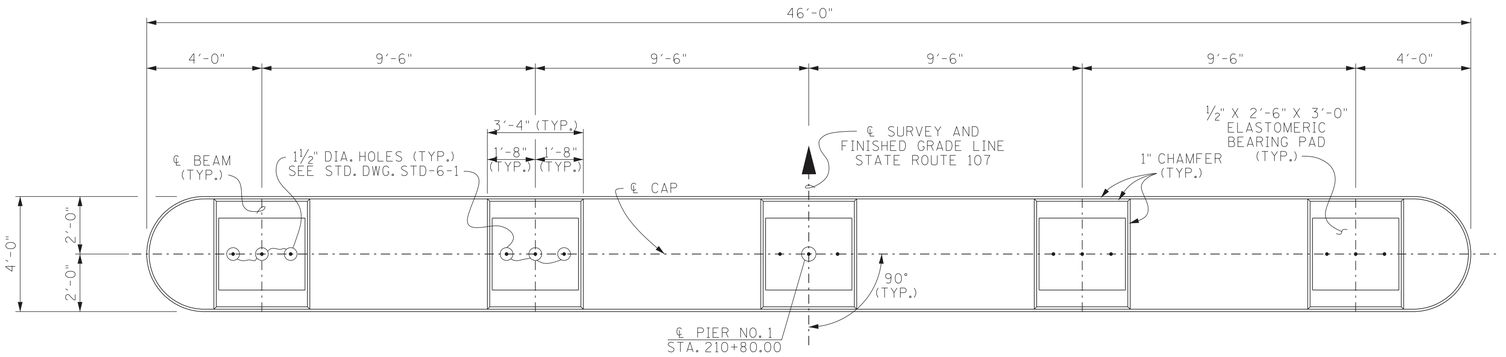

PLAN

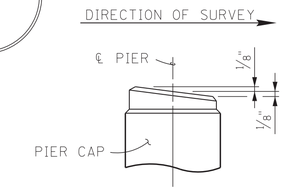

RISER BLOCK SLOPE DETAIL

NOTE: RISER BLOCK BEARING SURFACE TO CONFORM TO BOTTOM OF BEAM GRADE.

NOTE: RISER BLOCKS TO BE POURED MONOLITHICALLY WITH PIER CAP.

NOTE: WHEN POURING CAP BEAM, PROVISIONS SHALL BE MADE FOR SETTING ANCHOR BOLTS. SEE STANDARD DRAWING STD-6-1. MINIMUM BOLT PROJECTION IS 11".

NOTE: COLUMN STEEL TO EXTEND 2'-7" MIN. INTO PIER CAP (TYP.).

NOTE: FOR SECTION "A"-"A", SECTION "B"-"B", AND SECTION "C"-"C" SEE DWG. NO. U-94-398.

NOTE: ELASTROMERIC PADS SHALL BE IN PLACE A MINIMUM OF ONE DAY BEFORE BEING DISTRUBED BY SETTING BEAMS ON CONCRETE. PLACE RUBBER BONDING CEMENT IN SUCH A WAY THAT VISIBLE CONCRETE SURFACES WILL NOT BE STAINED.

NOTE: CORNER REBAR SHALL BE ADJUSTED TO FIT IN BENDS/ HOOKS OF L65- BARS.

NOTE: ALL HOOKS/BENDS CONFORM TO THE LATEST CRSI DETAILS.

NOTE: SEE STD-6-1 FOR PILE DETAILS AND NOTES.

NOTE: CONTRACTOR TO ADJUST COLUMN STEEL LOCATION IF CONFLICTS WITH BOTTOM MAT OF CAP REINFORCEMENT ARE PRESENT. KEEP SPACING AS UNIFORM AS POSSIBLE.

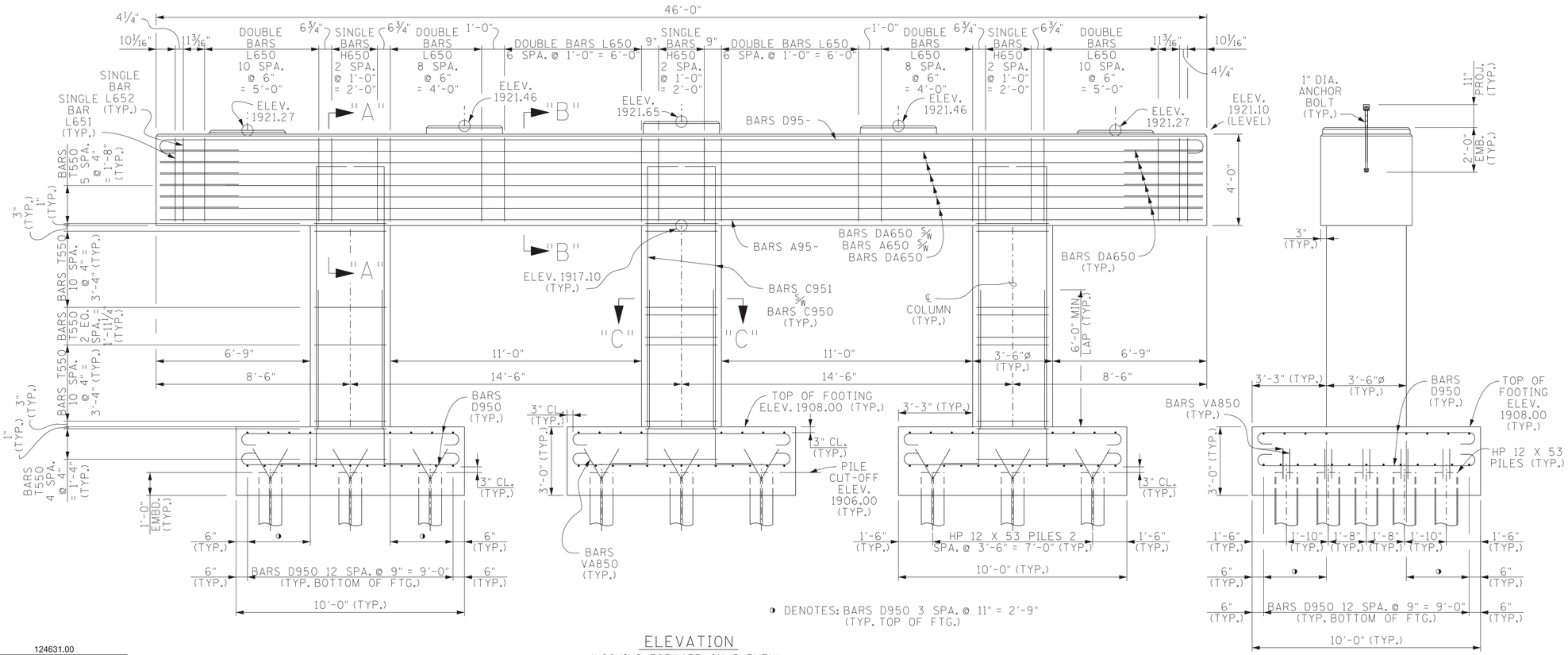

ELEVATION

(LOOKING FORWARD ON SURVEY)

END ELEVATION

ESTIMATED QUANTITIES	
CLASS "A" CONCRETE (BRIDGES) C.Y.	REINFORCEMENT (BRIDGES) L.B.
71	15,670

SEALED BY

PIN NO.:	124631.00		
DESIGN BY:	JOSEPH LAINE	DATE:	07/2023
DRAWN BY:	T. R. KIRK	DATE:	08/2023
SUPERVISED BY:	CDL/GWK	DATE:	05/2024
CHECKED BY:	J. SHOULDERS	DATE:	05/2024

STATE OF TENNESSEE
DEPARTMENT OF TRANSPORTATION

PIER NO. 1
STATE ROUTE 107
(UNICOI DRIVE)
OVER NORTH INDIAN CREEK
BRIDGE ID NO. 86SR1070007
LOG MILE 5.22
STATION 210+80.00
UNICOI COUNTY
2024

U - 94 - 397

$$$$SSYTIME$$$$$$
$$$$DGNSPECS$$$$$$

CONST. NO.: 86006-3235-94

PROJECT NO.	YEAR	SHEET NO.
BR-STP-107-(28)	2024	

REVISIONS

NO.	DATE	BY	BRIEF DESCRIPTION

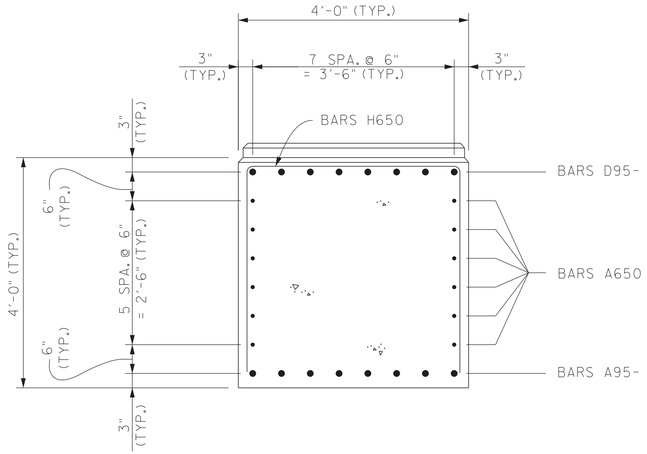

SECTION "A"-"A"

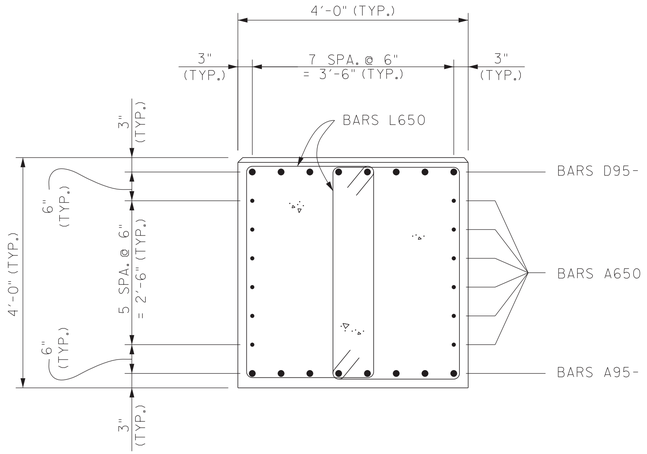

SECTION "B"-"B"

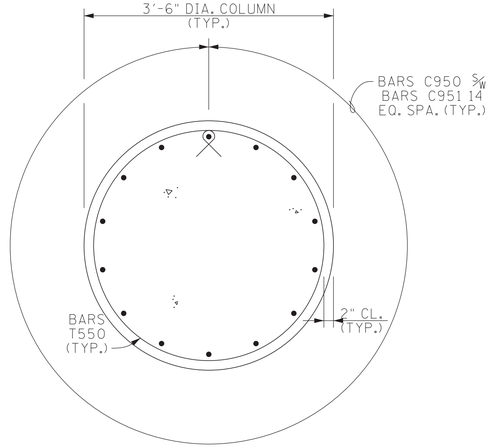

SECTION "C"-"C"

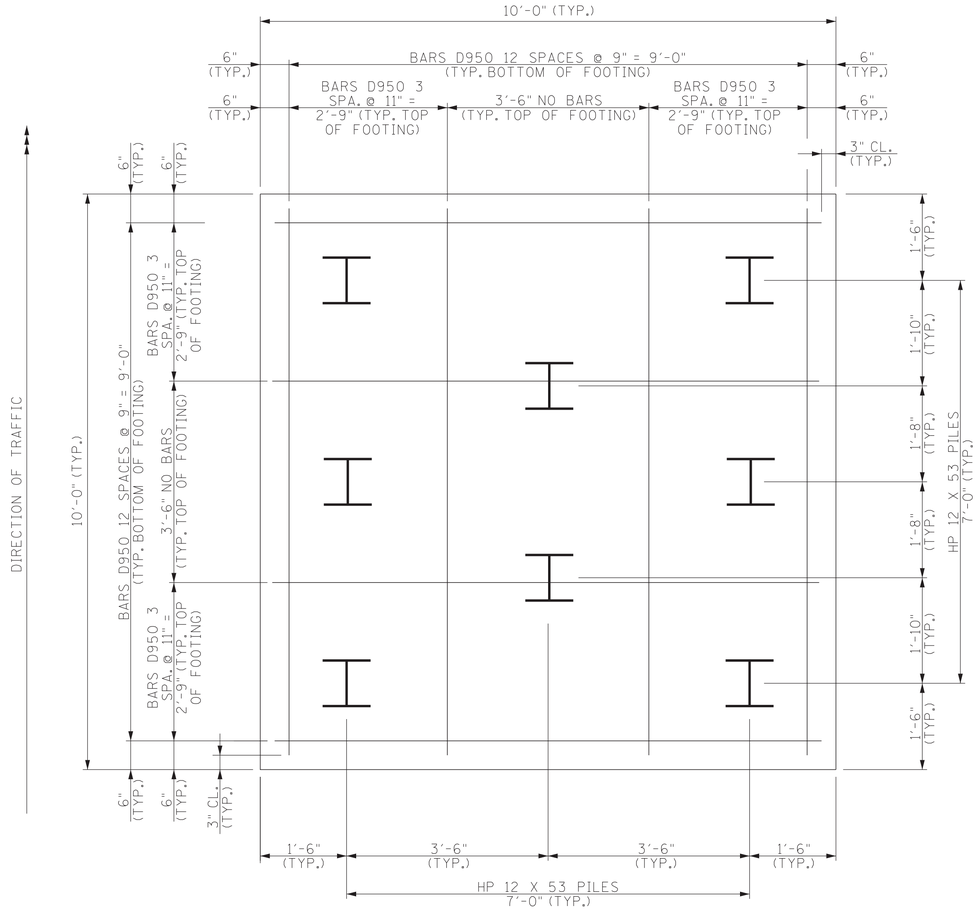

PLAN OF FOOTING

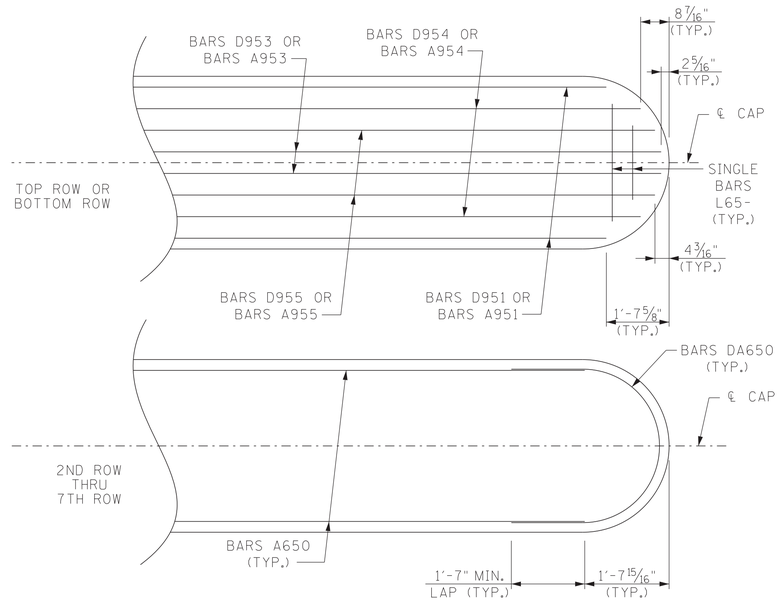

CAP PLAN OF REINFORCEMENT

SEALED BY

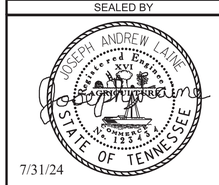

PIN NO.: 124631.00

DESIGN BY:	JOSEPH LAINE	DATE:	07/2023
DRAWN BY:	T. R. KIRK	DATE:	08/2023
SUPERVISED BY:	CDL/GWK	DATE:	05/2024
CHECKED BY:	J. SHOULDERS	DATE:	05/2024

STATE OF TENNESSEE
DEPARTMENT OF TRANSPORTATION

PIER NO. 1 DETAILS
STATE ROUTE 107
(UNICOI DRIVE)
OVER NORTH INDIAN CREEK
BRIDGE ID NO. 86SR1070007
LOG MILE 5.22
STATION 210+80.00
UNICOI COUNTY
2024

U - 94 - 398

$$$$SYTIME$$$$$$$
$$$$DGNSPEC$$$$$$$

CONST. NO.: 86006-3235-94

PROJECT NO.	YEAR	SHEET NO.
BR-STP-107(28)	2024	

REVISIONS

NO.	DATE	BY	BRIEF DESCRIPTION

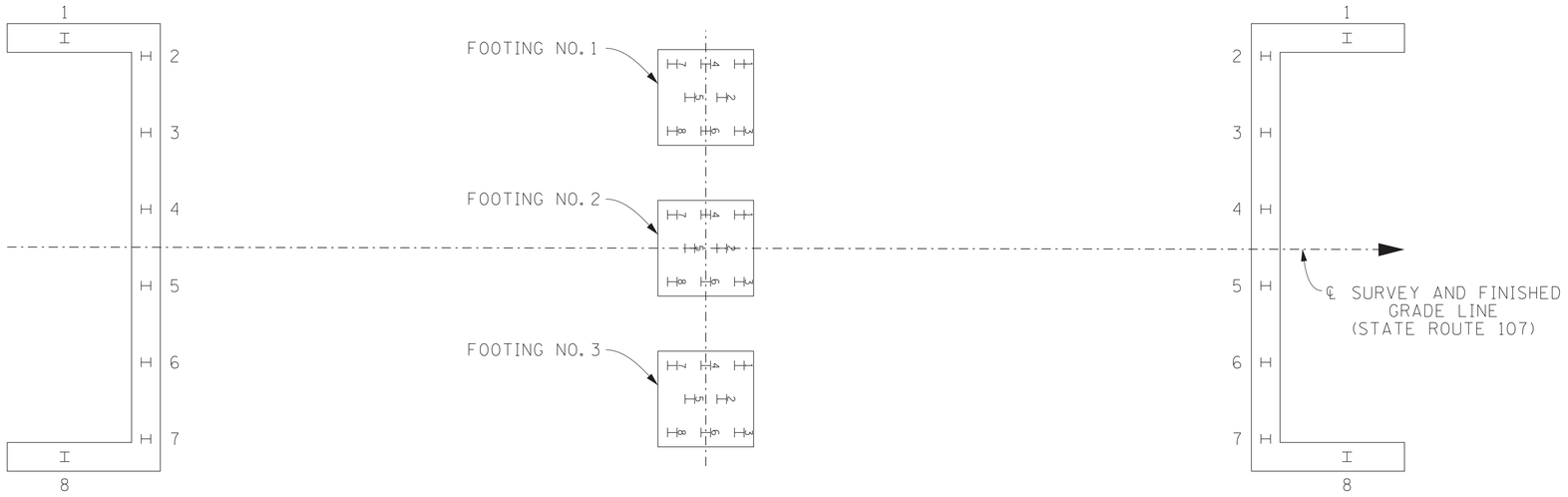

ABUTMENT NO. 1

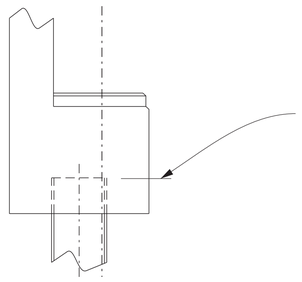

ABUTMENT NO. 1

BENT NO. 1

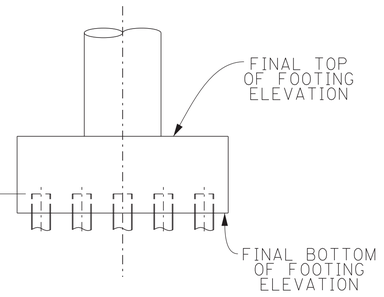

PIER NO. 1

ABUTMENT NO. 2

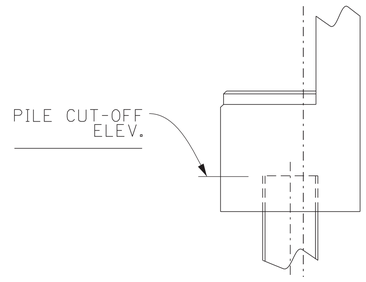

ABUTMENT NO. 2

TABLE SHOWING PILE NUMBERS, PILE CUT-OFF ELEVATIONS AND LENGTHS

		1	2	3	4	5	6	7	8
ABUT. NO. 1	PILE CUT-OFF ELEV.								
	PILE TIP ELEV.								
	IN PLACE PILE LENGTH								
ABUT NO. 2	PILE CUT-OFF ELEV.								
	PILE TIP ELEV.								
	IN PLACE PILE LENGTH								

PIER NO. 1		1	2	3	4	5	6	7	8
FOOTING NO. 1	PILE CUT-OFF ELEV.								
	PILE TIP ELEV.								
	IN PLACE PILE LENGTH								
FOOTING NO. 2	PILE CUT-OFF ELEV.								
	PILE TIP ELEV.								
	IN PLACE PILE LENGTH								
FOOTING NO. 3	PILE CUT-OFF ELEV.								
	PILE TIP ELEV.								
	IN PLACE PILE LENGTH								

NOTE TO CONTRACTOR AND CONSTRUCTION OFFICE:
THE BLANKS ON THIS SHEET ARE TO BE FILLED IN BY THE CONSTRUCTION OFFICE AND/OR FIELD ENGINEER GIVING AS BUILT CONDITIONS. AFTER COMPLETION, IT IS TO BE SENT TO THE DIVISION OF STRUCTURES TO BECOME PART OF FINAL BRIDGE DOCUMENTS.

STATE OF TENNESSEE
DEPARTMENT OF TRANSPORTATION
FINAL FOUNDATION DATA
STATE ROUTE 107
(UNICOI DRIVE)
OVER NORTH INDIAN CREEK
BRIDGE I. D. NO. 86SR1070007
STATION 210+80.00
UNICOI COUNTY
2024

PIN NO.: 124631.00
DESIGN BY: JOSEPH LAINE DATE: 07/2023
DRAWN BY: J. STEVENS DATE: 08/2023
SUPERVISED BY: CDL/GWK DATE: 05/2024
CHECKED BY: J. SHOULDERS DATE: 05/2024

ENGINEER OF STRUCTURES

U-94-399

$$$$SYTIME$$$$$$
$$$$DGNSPEC$$$$$$

BILL OF STEEL

SUPERSTUCTURE (EPOXY)

BARS	LOCATION	SIZE	NO. REQ'D.	BENDING DIMENSIONS A	B	C	D	LENGTH (FEET)
A600E	SLAB	6	312					45'-8"
A601E	SLAB	6	168					34'-8"
A602E	SLAB	6	36					60'-0"
A603E	SLAB	6	43					30'-0"
A800E	SLAB	8	48					60'-0"
B571E	SLAB/BRIDGERAIL	5	720	2'-8"				3'-3"

SUPERSTUCTURE (REGULAR)

BARS	LOCATION	SIZE	NO. REQ'D.	BENDING DIMENSIONS A	B	C	D	LENGTH (FEET)
A500	DIAPHRAGM	5	8					40'-8"
L400	DIAPHRAGM	4	28	2'-6 5/8"	1'-2"			8'-3"
L401	DIAPHRAGM	4	10	1'-9"	1'-2"			5'-6"

ABUTMENT NO. 1 (EPOXY)

BARS	LOCATION	SIZE	NO. REQ'D.	BENDING DIMENSIONS A	B	C	D	LENGTH (FEET)
A640E	ENDWALL	6	2					45'-8"
A644E	ENDWALL	6	92					3'-8"
B570E	W.W. / PARAPET	5	40	2'-8"				3'-3"
B640E	ENDWALL	6	2	5'-0"				5'-8"
H400E	WINGWALL/WINGPOST	4	6	10 1/2"	3'-11"			8'-9"
H401E	WINGWALL/WINGPOST	4	2	9 7/8"	3'-10"			8'-6"
H402E	WINGWALL/WINGPOST	4	2	8 3/4"	3'-9"			8'-3"
H403E	WINGWALL/WINGPOST	4	2	7 5/8"	3'-8"			8'-0"
H404E	WINGWALL/WINGPOST	4	2	6 1/2"	3'-7"			7'-9"
SERIES								
HA400E	WINGWALL/WINGPOST	4	2	*	3'-11"	9"		33'-0"
				* DIM. A VARIES FROM 5 7/8" TO 3 3/4" IN INC. OF 3/4" (4 BARS)				
SERIES								
HA401E	WINGWALL/WINGPOST	4	2	*	3'-11"	9"		44'-8"
				* DIM. A VARIES FROM 10" TO 6 1/2" IN INC. OF 5/16" (5 BARS)				
F640E	ROADWAY BRKT.	6	43	1'-1"	1'-3"	1'-1"	1'-3"	3'-11"
R640E	ENDWALL	6	43	3'-3"	3'-0"			6'- 3"

ABUTMENT NO. 1 (REGULAR)

BARS	LOCATION	SIZE	NO. REQ'D.	BENDING DIMENSIONS A	B	C	D	LENGTH (FEET)
A440	RDWY BRK	4	1					42'-8"
A442	WINGWALL	4	10					13'-5"
A443	WINGWALL	4	24					3'-7"
A540	ABUT BEAM	5	2					47'-2"
A542	WING BEAM	5	4					14'-11"
A642	ENDWALL	6	8					45'-8"
A645	WINGWALL	6	8					3'-6"
A646	WINGWALL	6	10					13'-5"
A647	WINGWALL	6	24					3'-7"
A740	ABUT. BEAM	7	12					47'-2"
A742	WING BEAM	7	24					14'-11"
B641	ENDWALL	6	8	5'-0"				5'-8"
H440	ENDWALL	4	4	1'-2"	1'-6"			4'-2"
H441	ENDWALL	4	2	3'-2"	1'-6"			6'-2"
H540	ENDWALL	5	43	2'-2"	0'-6"			3'-2"
H640	ABUT. WALLS	6	43	1'-2"	3'-11"			9'-0"
H641	WING WALLS	6	24	1'-2"	3'-7"			8'-4"
L540	WING BEAM	5	69	2'-8 1/8"	2'-8 1/8"			11'-9"
VA840	FOOTING	8	16	2'-6"				5'-0"

ABUTMENT NO. 2 (EPOXY)

BARS	LOCATION	SIZE	NO. REQ'D.	BENDING DIMENSIONS A	B	C	D	LENGTH (FEET)
A640E	ENDWALL	6	2					45'-8"
A644E	ENDWALL	6	92					3'-8"
B570E	W.W. / PARAPET	5	40	2'-8"				3'-3"
B640E	ENDWALL	6	2	5'-0"				5'-8"
H400E	WINGWALL/WINGPOST	4	6	11"	3'-11"			8'-9"
H401E	WINGWALL/WINGPOST	4	2	11"	3'-10"			8'-7"
H402E	WINGWALL/WINGPOST	4	2	10"	3'-9"			8'-4"
H403E	WINGWALL/WINGPOST	4	2	8"	3'-8"			8'-0"
H404E	WINGWALL/WINGPOST	4	2	5"	3'-7"			7'-7"
SERIES								
HA400E	WINGWALL/WINGPOST	4	2	*	3'-11"	9"		33'-0"
				* DIM. A VARIES FROM 5 7/8" TO 3 3/4" IN INC. OF 3/4" (4 BARS)				
SERIES								
HA401E	WINGWALL/WINGPOST	4	2	*	3'-11"	9"		44'-8"
				* DIM. A VARIES FROM 10" TO 6 1/2" IN INC. OF 5/16" (5 BARS)				
F640E	ROADWAY BRKT.	6	43	1'-1"	1'-3"	1'-1"	1'-3"	3'-11"
R640E	ENDWALL	6	43	3'-3"	3'-0"			6'- 3"

ABUTMENT NO. 2 (REGULAR)

BARS	LOCATION	SIZE	NO. REQ'D.	BENDING DIMENSIONS A	B	C	D	LENGTH (FEET)
A440	RDWY BRK	4	1					42'-8"
A442	WINGWALL	4	10					13'-5"
A443	WINGWALL	4	24					3'-7"
A540	ABUT BEAM	5	2					47'-2"
A542	WING BEAM	5	4					14'-11"
A642	ENDWALL	6	8					45'-8"
A645	WINGWALL	6	8					3'-6"
A646	WINGWALL	6	10					13'-5"
A647	WINGWALL	6	24					3'-7"
A740	ABUT. BEAM	7	12					47'-2"
A742	WING BEAM	7	24					14'-11"
B641	ENDWALL	6	8	5'-0"				5'-8"
H440	ENDWALL	4	4	1'-2"	1'-6"			4'-2"
H441	ENDWALL	4	2	3'-2"	1'-6"			6'-2"
H540	ENDWALL	5	43	2'-2"	0'-6"			3'-2"
H640	ABUT. WALLS	6	43	1'-2"	3'-11"			9'-0"
H641	WING WALLS	6	24	1'-2"	3'-7"			8'-4"
L540	WING BEAM	5	69	2'-8 1/8"	2'-8 1/8"			11'-9"
VA840	FOOTING	8	16	2'-6"				5'-0"

PIER NO. 1 (REGULAR)

BARS	LOCATION	SIZE	NO. REQ'D.	BENDING DIMENSIONS A	B	C	D	LENGTH (FEET)
A650	CAP	6	12					42'-8"
A951	CAP	9	2					42'-9"
A953	CAP	9	2					45'-7"
A954	CAP	9	2					44'-7"
A955	CAP	9	2					45'-3"
C950	FTG/COL	9	42	7'-11"				9'-6"
C951	COL/CAP	9	42	11'-5"				13'-0"
D950	FTG	9	126	9'-6"				12'-8"
D951	CAP	9	2	42'-8"				45'-10"
D953	CAP	9	2	45'-7"				48'-9"
D954	CAP	9	2	44'-7"				47'-9"
D955	CAP	9	2	45'-3"				48'-5"
DA650	CAP	6	12	3'-7 1/8"	1'-7"	1'-9 1/2"		8'-2"
H650	CAP	6	9	3'-8 5/8"	3'-8"			10'-9"
L650	CAP	6	108	2'-4 1/3"	3'-8 5/8"			13'-1"
L651	CAP	6	2	2'-0"	3'-8 5/8"			12'-4"
L652	CAP	6	2	3'-0"	3'-8 5/8"			14'-4"
T550	FTG/COL/CAP	5	102	3'-2"				10'-9"
VA850	FOOTING	8	48	2'-6"				5'-0"

NOTE: BAR NUMBERS ARE REPEATED ON BILL OF STEEL FOR EACH SUBSTRUCTURE. THE SUPPLIER SHALL SHIP THE BARS TO THE JOB SITE WITH THE SUBSTRUCTURE DESIGNATION INCLUDED AS PART OF THE LABEL.
NOTE: LENGTH IS MEASURED ALONG CENTERLINE OF THE REBAR ACCOUNTING FOR BENDS.

REINFORCING STEEL CODE

TYPE	SIZE	SERIES
A	5	06

NOTE: DIMENSIONS SHOWN ON THIS SHEET ARE OUTSIDE TO OUTSIDE OF BAR. STANDARD C.R.S.I. HOOK DETAILS SHALL APPLY, EXCEPT AS NOTED.
NOTE: THE SUFFIX E FOR BARS SO MARKED DENOTES EPOXY COATED REINFORCEMENT.

BARS A

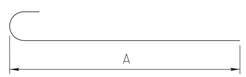

BARS B

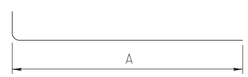

BARS C

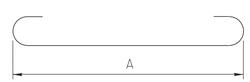

BARS D

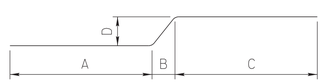

BARS F

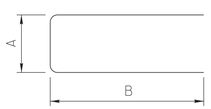

BARS H

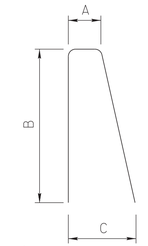

1 BARS HA

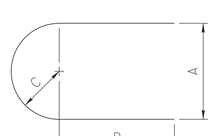

BARS DA

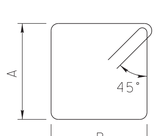

BARS L

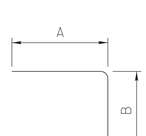

BARS R

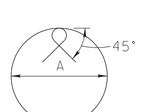

BARS T

BARS VA

PIN NO.: 124631.00
DESIGN BY: JOSEPH LAINE DATE: 07/2023
DRAWN BY: J. STEVENS DATE: 09/2023
SUPERVISED BY: CDL/GWK DATE: 05/2024
CHECKED BY: J. SHOULDERS DATE: 05/2024

CONST. NO.: 86006-3235-94

PROJECT NO.	YEAR	SHEET NO.
BR-STP-107-(28)	2024	

REVISIONS

NO.	DATE	BY	BRIEF DESCRIPTION
1	09/26/2024	JL	REVISED BAR DIAGRAM
2	05/16/2025	JL	GENERAL FORMATTING AND BAR LENGTH
			CORRECTIONS

SEALED BY

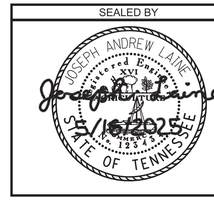

STATE OF TENNESSEE
DEPARTMENT OF TRANSPORTATION
BILL OF STEEL
STATE ROUTE 107
(UNICOI DRIVE)
OVER NORTH INDIAN CREEK
BRIDGE ID NO. 86SR1070007
LOG MILE 5.22
STATION 210+80.00
UNICOI COUNTY
2024

U-94-400

$$$$SYTIME$$$$$$$$
$$$$DGNSPEC$$$$$$$$

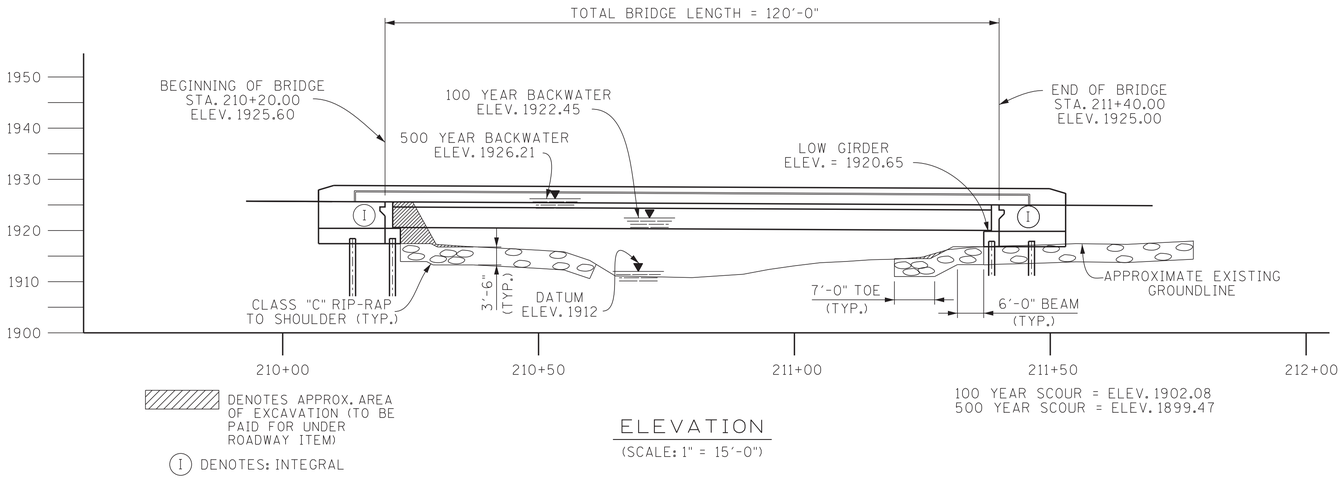

ELEVATION

(SCALE: 1" = 15'-0")

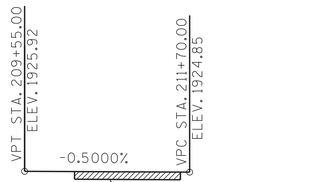

GRADE SKETCH

(STATE ROUTE 107)

CONST. NO.: 86006-3235-94

PROJECT NO.	YEAR	SHEET NO.
BR-STP-107-(28)	2025	

REVISIONS

NO.	DATE	BY	BRIEF DESCRIPTION
1	05/16/2025	JS	ADDED SHEET

LIST OF DRAWINGS

	DWG. NO.	LAST REV. DATE
LAYOUT OF BRIDGE	U-94-883	05/16/2025
GENERAL NOTES	U-94-884	05/16/2025
ESTIMATED QUANTITIES	U-94-885	05/16/2025
FOUNDATION DATA	U-94-886	05/16/2025
FOUNDATION DATA	U-94-887	05/16/2025
SUPERSTRUCTURE	U-94-888	05/16/2025
SUPERSTRUCTURE DETAILS	U-94-889	05/16/2025
STRUCTURAL STEEL DETAILS	U-94-890	05/16/2025
STRUCTURAL STEEL DETAILS	U-94-891	05/16/2025
ABUTMENT NO. 1	U-94-892	05/16/2025
ABUTMENT NO. 1 DETAILS	U-94-893	05/16/2025
ABUTMENT NO. 1 DETAILS	U-94-894	05/16/2025
ABUTMENT NO. 2	U-94-895	05/16/2025
ABUTMENT NO. 2 DETAILS	U-94-896	05/16/2025
ABUTMENT NO. 2 DETAILS	U-94-897	05/16/2025
FINAL FOUNDATION	U-94-898	05/16/2025
BILL OF STEEL	U-94-899	05/16/2025

LIST OF STANDARD DRAWINGS

	DWG. NO.	LAST REV. DATE
BRIDGE RAILING SINGLE SLOPE CONCRETE PARAPET	STD-1-1SS	07/24/2024
REINFORCED CONCRETE PAVEMENT AT BRIDGE ENDS	STD-1-5	06/05/2023
STANDARD PILE DETAILS	STD-5-1	
STANDARD SEISMIC DETAILS	STD-6-1	12/08/2023
STANDARD REINFORCING BAR SUPPORT DETAILS FOR CONCRETE SLABS	STD-9-1	10/07/2008
MISCELLANEOUS ABUTMENT AND DRAINAGE DETAILS	STD-10-1	06/05/2023
MISC. ABUTMENT AND PAVEMENT AT BRIDGE ENDS BACKFILL DETAILS	STD-10-2	06/05/2023

LIST OF SPECIAL PROVISIONS REGARDING

	PROV. NO.	LAST REV. DATE
REMOVAL OF ASBESTOS CONTAINING MATERIAL (ACM)	202ACM	07/07/2014

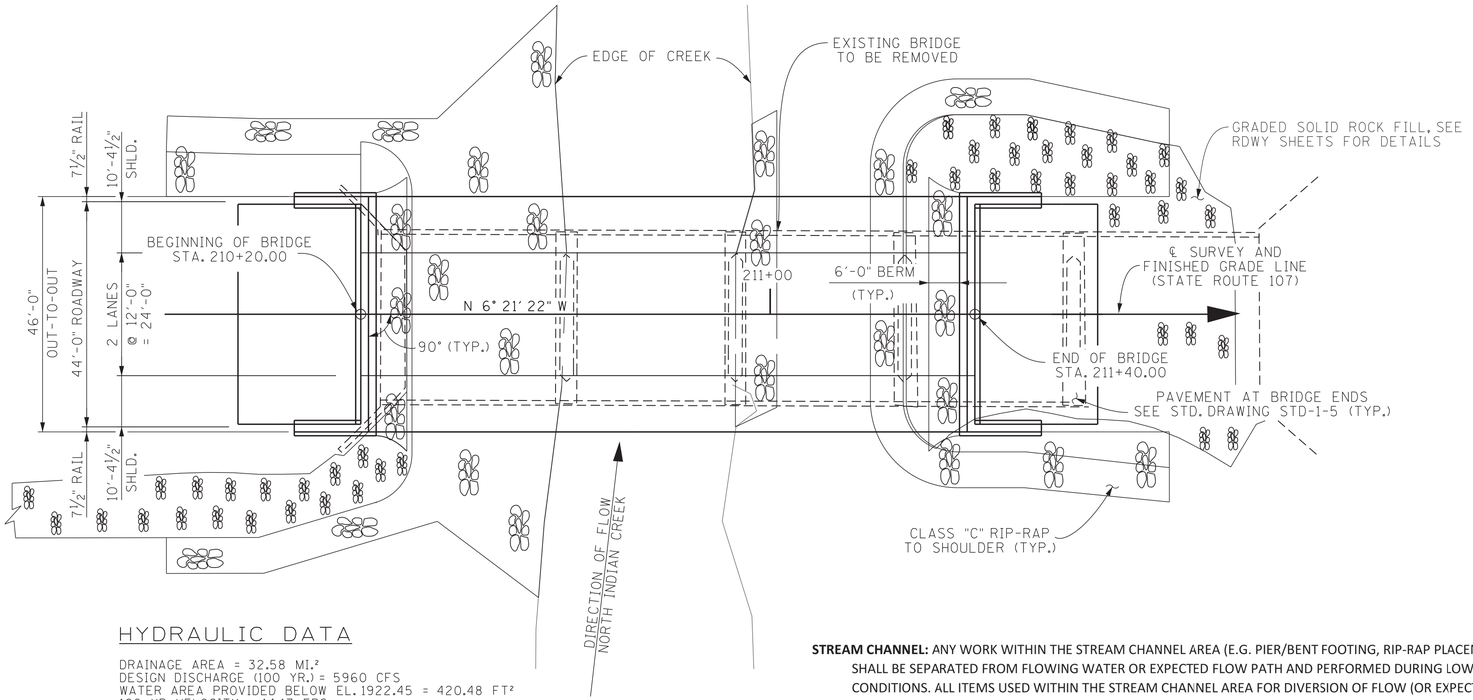

PLAN

(SCALE: 1" = 15'-0")

HYDRAULIC DATA

DRAINAGE AREA = 32.58 MI.²
DESIGN DISCHARGE (100 YR.) = 5960 CFS
WATER AREA PROVIDED BELOW EL. 1922.45 = 420.48 FT²
100 YR. VELOCITY = 14.17 FPS
100 YR. BRIDGE BACKWATER = 1.72 FT. @ EL. 1922.45
ROADWAY OVERTOPPING EL. = 1924.75

STREAM CHANNEL: ANY WORK WITHIN THE STREAM CHANNEL AREA (E.G. PIER/BENT FOOTING, RIP-RAP PLACEMENT, ETC.) SHALL BE SEPARATED FROM FLOWING WATER OR EXPECTED FLOW PATH AND PERFORMED DURING LOW FLOW CONDITIONS. ALL ITEMS USED WITHIN THE STREAM CHANNEL AREA FOR DIVERSION OF FLOW (OR EXPECTED FLOW), UNLESS SPECIFIED IN THE PLANS, SHALL NOT BE PAID FOR DIRECTLY BUT SHALL BE INCLUDED IN THE COST OF OTHER ITEMS. THIS NOTE EXCLUDES ANY ITEMS SPECIFIED IN THE PLANS FOR TEMPORARY DIVERSION CHANNELS (EC-STR-31).

SEALED BY

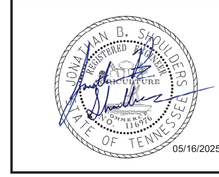

PIN NO.: 124631.00

DESIGN BY:	J. SHOULDERS	DATE: 03/2025
DRAWN BY:	J. SHOULDERS	DATE: 04/2025
SUPERVISED BY:	AP/GWK	DATE: 04/2025
CHECKED BY:	J. SHOULDERS	DATE: 04/2025

5/16/2025 2:37:15 PM
P:\STRUCTURES\CADD_REGION_1\86-UNICOI\86SR1070007\CADD\BRIDGE_DRAWINGS\STEEL ALTERNATE\86SR1070007ALAY.SHT

STATE OF TENNESSEE
DEPARTMENT OF TRANSPORTATION

LAYOUT OF BRIDGE
STATE ROUTE 107
(UNICOI DRIVE)
OVER NORTH INDIAN CREEK
BRIDGE ID NO. 86SR1070007
LOG MILE 5.22
STATION 210+80.00
UNICOI COUNTY
2025

U-94-883

GENERAL NOTES:

CONSTRUCTION SPECIFICATIONS: TENNESSEE DEPARTMENT OF TRANSPORTATION STANDARD SPECIFICATIONS FOR ROAD AND BRIDGE CONSTRUCTION (JANUARY 1, 2021 EDITION).

DESIGN SPECIFICATIONS: 9TH EDITION (2020) AASHTO LRFD BRIDGE DESIGN SPECIFICATIONS AND THE 2ND EDITION (2011) AASHTO GUIDE SPECIFICATIONS FOR LRFD SEISMIC BRIDGE DESIGN WITH INTERIMS.

LOADING:

A. HL-93 LIVE LOADING;
B. SEISMIC DESIGN CATEGORY "A" WITH A_S= 0.135, S_{DS}=0.264, S_{D1}=0.106, (1000 YEAR RETURN PERIOD).
C. DEAD LOAD INCLUDES 35 LB/SQ. FT. FOR FUTURE WEARING SURFACE.

CONCRETE: TO BE CLASS A (CAST-IN-PLACE) F'C = 3000 PSI EXCEPT AS NOTED OTHERWISE.

BRIDGE DECKS: CLASS D CONCRETE FOR BRIDGE DECKS SHALL BE IN ACCORDANCE WITH SECTION 604 OF THE STANDARD SPECIFICATIONS.

BRIDGE DECK SURFACE FINISH: TO BE IN ACCORDANCE WITH METHOD 3 IN ARTICLE 604.22 OF THE STANDARD SPECIFICATIONS.

BRIDGE DECK FORMS: BRIDGE DECK FORMS FOR CONCRETE DECKS SHALL BE CONSTRUCTED USING EITHER REMOVABLE FORMS OR PERMANENT FORMS. PERMANENT FORMS SHALL BE REMAIN-IN-PLACE STEEL. FORMS SHALL BE ATTACHED BY MEANS OTHER THAN WELDING TO MAIN STRUCTURAL MEMBERS OR REINFORCING STEEL. TEMPORARY ERECTION DIAPHRAGMS MUST BE USED AT THE ENDS OF PRECAST CONCRETE GIRDERS WHERE END DIAPHRAGMS, SUPPORT DIAPHRAGMS, OR ABUTMENT ENDWALLS ARE TO BE POURED CONCURRENTLY WITH THE DECK AND SHALL BE PROVIDED ELSEWHERE IN ACCORDANCE WITH THE STANDARD SPECIFICATIONS TO PREVENT GIRDER ROTATION.

REINFORCING STEEL: SHALL BE ASTM A615 GRADE 60 UNLESS NOTED OTHERWISE. SEE SECTIONS 604 AND 907 OF THE STANDARD SPECIFICATIONS.

SHOP DRAWINGS: SEE SECTION 105.02 OF THE STANDARD SPECIFICATIONS.

PILE TIPS: PILES SHALL BE EQUIPPED WITH CAST STEEL POINTS. ALSO, SEE STANDARD DRAWING STD-5-1 FOR ADDITIONAL NOTES.

END-BEARING STEEL PILES: TO BE HP12X53 DRIVEN TO REFUSAL ON ROCK OR A MINIMUM BEARING OF 135 TONS. ALL PILES SHALL BE ASTM A709 GRADE 50 STEEL.

PILE PRE-DRILLING: THE BRIDGE FOUNDATION REPORT INDICATES THE POTENTIAL FOR EXCESSIVELY HARD DRIVING CONDITIONS THAT MAY CAUSE SHALLOW REFUSAL OF THE PILE. AS A RESULT, ALL PILES SHALL BE INSTALLED IN ACCORDANCE WITH THE FOLLOWING DETAILS.

1. A 2'-0" DIAMETER HOLE SHALL BE DRILLED IN THE PLANS LOCATION FOR THE PILE. THE AMOUNT OF CORE DRILLING (SOIL) WILL VARY DUE TO LOCATION OF ROCK LINE.
2. THE DRILLING SHALL ACHIEVE THE FOLLOWING MINIMUM ELEVATIONS BEFORE TERMINATION:
   ABUTMENT NO.1 = ELEV. 1883.00
   ABUTMENT NO. 2 = ELEV. 1890.00
   PIER NO. 1 = ELEV. 1890.00
3. THE PILE SHALL PLACED IN THE HOLE AND DRIVEN TO REFUSAL INTO COMPETENT ROCK.
4. THE HOLE SHALL BE BACKFILLED WITH PEA GRAVEL. THE TOP OF THE PILE SHALL BE BRACED IN A MANNER SO THAT ITS VERTICAL POSITION IN THE CENTER OF THE HOLE IS MAINTAINED.

BASIS FOR PAYMENT: THE COST OF MATERIAL AND LABOR FOR DRILLING THE 2'-0" DIAMETER HOLES SHALL BE INCLUDED IN ITEM NO. 204-15 - CORE DRILLING FOR PILES (SOIL). THE COST OF ALL OTHER MATERIAL AND LABOR NECESSARY FOR PILE DRIVING, BACKFILLING WITH PEA GRAVEL, BRACING OF THE PILES AND ANY OTHER INCIDENTALS REQUIRED FOR INSTALLATION OF THE PILES SHALL BE INCLUDED IN ITEM NO. 606-03.03: STEEL PILES (12 INCH).

ABUTMENTS ON FILL: THE FILLS AT THE ENDS OF THE BRIDGE SHALL BE IN PLACE AND THOROUGHLY COMPACTED BEFORE ANY ABUTMENT PILES ARE DRIVEN.

WELDING: SEE SECTION 602 OF THE STANDARD SPECIFICATIONS AND NOTES ON DRAWING NO. U-94-888.

PAINT: PAINT SHALL BE SYSTEM "A" (QPL 3.001) – INORGANIC ZINC. COLOR OF THE FINISH COAT SHALL COMPLY WITH AMS-STD-595A, FEDERAL STANDARD NO. 30059, BROWN. SEE SECTIONS 603 AND 910 OF THE STANDARD SPECIFICATIONS. THE CONTRACTOR SHALL ALSO HAVE THE OPTION TO USE ORGANIC ZINC IN SYSTEM "A" INSTEAD OF AN INORGANIC ZINC. ORGANIC ZINC SYSTEMS SHALL BE FROM QPL 3.002.

PAINTING GIRDERS ENCASED IN CONCRETE: WHERE WEATHERING STEEL GIRDERS ARE ENCASED IN CONCRETE AT INTEGRAL ABUTMENTS, THE GIRDERS SHALL BE PAINTED OVER THE ENTIRE EMBEDMENT LENGTH PLUS AT LEAST ONE FOOT OUTSIDE THE ENCASEMENT. HOWEVER, THE SURFACES EMBEDDED IN CONCRETE SHALL ONLY RECEIVE A COAT OF PRIMER. FOR SURFACES NOT EMBEDDED IN CONCRETE, THE COLOR OF THE TOP COAT SHALL BE BROWN, AMS-STD-595A, COLOR NO. 30059.

STEEL STRUCTURES: SEE TENNESSEE STANDARD SPECIFICATIONS SECTION 602 AND NOTES ON DRAWING NO. U-94-888.

RADIOGRAPHIC, ULTRASONIC, AND MAGNETIC INSPECTION: SEE SECTION 602 OF THE STANDARD SPECIFICATIONS AND NOTES ON DRAWING NO. U-94-888.

PROTECTION OF SUBSTRUCTURES: SINCE THIS BRIDGE UTILIZES WEATHERING STEEL, THE CONTRACTOR MUST TAKE SPECIAL PRECAUTIONS TO PREVENT STAINING OF PIERS AND ABUTMENTS. PRIOR TO THE ERECTION OF ANY STEEL, THE TOPS AND SIDES OF THE COMPLETED SUBSTRUCTURES SHALL BE PROTECTED FROM STAINING BY WRAPPING WITH TRANSLUCENT, REINFORCED, HIGH DENSITY, TWO-PLY, CROSS-LAMINATED POLYETHYLENE.

IN LIEU OF THIS PROTECTION, THE CONTRACTOR MAY ELECT TO THOROUGHLY CLEAN THE CONCRETE OF RUST STAINING BY SANDBLASTING OR OTHER APPROVED METHODS, PRIOR TO APPLYING A TEXTURE-COATED FINISH. NO SEALANT TYPE MATERIALS SHALL BE APPLIED WHICH ARE INCOMPATIBLE WITH THE TEXTURE-COATED FINISH UNLESS THEY CAN BE THOROUGHLY REMOVED PRIOR TO APPLYING THE FINISH. TEXTURE-COATING OF THE SUBSTRUCTURE SHALL BE DELAYED UNTIL AFTER THE DECK IS COMPLETED.

AFTER A SUBSTRUCTURE HAS RECEIVED ITS FINAL FINISH, THE TOP AND SIDES SHALL BE PROTECTED FROM STAINING BY WRAPPING WITH REINFORCED POLYETHYLENE, WHICH, IF BEING REUSED, SHALL BE IN GOOD CONDITION AND FREE FROM HOLES AND TEARS. IT SHALL BE THE CONTRACTOR'S RESPONSIBILITY TO PROTECT THE SUBSTRUCTURES FROM STAINING FOR THE DURATION OF THE CONTRACT. ANY CORRECTIVE TEXTURE-COATING SHALL BE AT HIS EXPENSE. COST TO BE INCLUDED IN THE UNIT PRICE BID FOR OTHER ITEMS.

BLAST CLEANING: THE FASCIA GIRDERS AND ALL FAYING SURFACES OF FIELD SPLICES OF ALL GIRDERS SHALL BE BLAST CLEANED IN ACCORDANCE WITH THE STEEL STRUCTURES PAINTING COUNCIL SURFACE PREPARATION SPECIFICATIONS "NO. 6 COMMERCIAL BLAST CLEANING" SSPC-SP 6 (OR NACE EQUIVALENT). PRIOR TO BOLTING, ANY LOOSE RUST ON THE FAYING SURFACES SHALL BE REMOVED.

FINAL APPEARANCE: PRIOR TO FINAL ACCEPTANCE, ALL STRUCTURAL STEEL SHALL BE FREE OF GREASE, OIL, CHALK MARKS, PAINT, CONCRETE SPATTER AND SIMILAR SOILAGE. DEPENDING ON THE LOCATION, WITH RESPECT TO VIEW AND SEVERITY OF THE FOREGOING SOILAGE, THE STRUCTURAL STEEL SHALL BE CLEANED UNDER THE PROVISIONS OF ONE OF THE FOLLOWING STEEL STRUCTURES PAINTING COUNCIL SURFACE PREPARATION SPECIFICATIONS:

- NO. 1 SOLVENT CLEANING - SSPC-SP 1
- NO. 2 HAND CLEANING - SSPC-SP 2
- NO. 3 POWER TOOL CLEANING - SSPC-SP 3
- NO. 7 BRUSH-OFF BLAST CLEANING - SSPC-SP 7 (OR NACE EQUIVALENT)

WEATHERING BOLTS: ALL BOLTS SHALL BE ASTM F3125 GRADE A325 TYPE 3 UNLESS NOTED OTHERWISE. ALL BOLTS, NUTS, AND WASHERS SHALL HAVE THE SAME WEATHERING CHARACTERISTICS AS THE STRUCTURAL STEEL USED. IN LIEU OF USING DIRECT TENSION INDICATORS (DTI'S), ALL BOLTS SHALL BE INSTALLED BY EITHER TURN-OF-NUT TIGHTENING OR CALIBRATED WRENCH TIGHTENING IN ACCORDANCE WITH SECTION 602 OF THE STANDARD SPECIFICATIONS AND THE AASHTO LRFD BRIDGE CONSTRUCTION SPECIFICATIONS, CURRENT EDITION.

PARAPET SYSTEM: BUILD PARAPETS ACCORDING TO STANDARD DRAWING STD-1-1SS. THE PARAPETS SHALL BE FORMED AND CAST PLUMB, NOT PERPENDICULAR TO THE SLAB. THE DIMENSIONS AT THE TRAFFIC FACE SHALL BE KEPT CONSTANT, WITH VARIATION DUE TO CROSS-SLOPE ACCOMMODATED AT THE REAR FACE. DURING CONSTRUCTION, SIDEWALK TO BE BUILT IN THE FUTURE.

FINISHING CONCRETE SURFACES: CONCRETE FINISHING SHALL BE IN ACCORDANCE WITH SECTION 604.21 OF THE STANDARD SPECIFICATIONS. A CLASS I FINISH FOLLOWED BY AN APPLIED TEXTURE FINISH SHALL BE USED IN LIEU OF A CLASS II FINISH. NO TEXTURE FINISH SHALL BE APPLIED PRIOR TO COMPLETION OF PAVING AND HAULING OPERATIONS AT THE BRIDGE SITE. THE APPLIED TEXTURE FINISH SHALL BE MEASURED AND PAID FOR UNDER ITEM NO. 604-04.01.

VALUE ENGINEERING ALTERNATE BRIDGE DESIGN CRITERIA: ALTERNATE BRIDGE DESIGN PROPOSALS MAY NOT DIMINISH THE FUNCTIONAL OR STRUCTURAL EQUIVALENCY OF THE BRIDGE AND MUST MEET OR EXCEED THE CAPACITIES OF THE CONTRACT PLANS STRUCTURE AT ALL LIMIT STATES IN AASHTO TABLE 3.4.1-1. ADDITIONALLY, THE WATERWAY OPENING AND FLOOD CLEARANCES MAY NOT BE REDUCED. FOR GRADE SEPARATIONS, THE HORIZONTAL CLEARANCES MAY NOT BE REDUCED, NOR MAY THE VERTICAL CLEARANCES BE LESS THAN THE MINIMUM ACCEPTABLE FOR THE TYPE FACILITY CROSSED.

RIP-RAP: MACHINED RIP-RAP SHALL BE CLASS "C" IN ACCORDANCE WITH SECTION 709 OF THE STANDARD SPECIFICATIONS AND SHALL BE MEASURED AND PAID FOR UNDER ROADWAY ITEM NO. 709-05.09.

NOTE: SEE PROJECT COMMITMENTS AND SPECIAL PROVISION 202ACM.

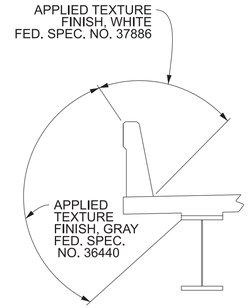

TYPICAL AT CANTILEVER AND BARRIER

APPLIED TEXTURE FINISH SKETCHES

TEXTURE FINISH: IN ADDITION TO THE SURFACES SHOWN IN THE APPLIED TEXTURE FINISH SKETCH, ALL EXPOSED SURFACES OF THE WINGWALLS, ABUTMENT BEAMS, BENTS, AND EXTERIOR PORTIONS OF THE ENDWALLS SHALL RECEIVE AN APPLIED TEXTURE FINISH, (GRAY, AMS-STD-595A, COLOR NO. 36440).

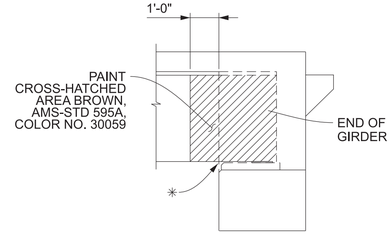

PAINT DETAIL AT ABUTMENTS

* DENOTES: THE SPACE BETWEEN THE EMBEDDED STEEL GIRDERS AND CONCRETE AT ABUTMENTS SHALL BE SEALED BY SILICONE CAULKING.

CONST. NO.: 86006-3235-94

PROJECT NO.	YEAR	SHEET NO.
BR-STP-107-(28)	2025	

REVISIONS

NO.	DATE	BY	BRIEF DESCRIPTION
1	05/16/2025	JS	ADDED SHEET

SEALED BY

JONATHAN B. SHOULDERS REGISTERED PROFESSIONAL ENGINEER STATE OF TENNESSEE 05/16/2025

STATE OF TENNESSEE
DEPARTMENT OF TRANSPORTATION
GENERAL NOTES
STATE ROUTE 107
(UNICOI DRIVE)
OVER NORTH INDIAN CREEK
BRIDGE ID NO. 86SR1070007
LOG MILE 5.22
STATION 210+80.00
UNICOI COUNTY
2025

U-94-884

PIN NO.: 124631.00
DESIGN BY: J. SHOULDERS DATE: 03/2025
DRAWN BY: J. SHOULDERS DATE: 04/2025
SUPERVISED BY: AP/GWK DATE: 04/2025
CHECKED BY: J. SHOULDERS DATE: 04/2025

5/16/2025 2:38:48 PM
P:\STRUCTURES\CADD_REGION_1\86-UNICOI\86SR1070007\CADD\BRIDGE_DRAWINGS\STEEL ALTERNATE\86SR1070007AGN.SHT

CONST. NO.: 86006-3235-94

PROJECT NO.	YEAR	SHEET NO.
BR-STP-107-(28)	2025	

REVISIONS

NO.	DATE	BY	BRIEF DESCRIPTION
1	05/16/2025	JS	ADDED SHEET

ESTIMATED QUANTITIES

	ITEM NO.	DESCRIPTION	UNIT	TOTAL	SUPERSTRUCTURE	ABUT. NO. 1	ABUT. NO. 2
(1)	202-01.02	REMOVAL OF ASBESTOS	L.S.	1			
(2)	202-04.01	REMOVAL OF STRUCTURE (EX. BR. NO. 86-SR107-05.22)	L.S.	1			
(4)	204-02.01	DRY EXCAVATION (BRIDGES)	C.Y.	176		88	88
	204-15	CORE DRILLING FOR PILES (SOIL)	L.F.	585		324	261
(9)	303-01.02	GRANULAR BACKFILL (BRIDGES)	TONS	30		15	15
(5)	602-04.01	STEEL STRUCTURES (35-INCH WEB, WELDED PLATE GIRDER)	L.S.	1	1		
(7)	602-10.60	BEARING DEVICE (ABUTMENTS)	EACH	10		5	5
	604-02.03	EPOXY COATED REINFORCING STEEL	LB.	37,373	33,813	1,780	1,780
	604-03.01	CLASS A CONCRETE (BRIDGES)	C.Y.	50		25	25
	604-03.02	STEEL BAR REINFORCEMENT (BRIDGES)	LB.	9,934		4,967	4,967
(3)	604-03.04	PAVEMENT @ BRIDGE ENDS	S.Y.	230			
	604-03.09	CLASS D CONCRETE (BRIDGE DECK)	C.Y.	196	140	28	28
	604-04.01	APPLIED TEXTURE FINISH (NEW STRUCTURES)	S.Y.	351	299	26	26
	604-05.31	BRIDGE DECK GROOVING (MECHANICAL)	S.Y.	776	776		
	606-03.03	STEEL PILES (12 INCH)	L.F.	612		351	261
(10)	606-03.06	PILE TIPS (STEEL PILES, 12 INCH)	EA.	18		9	9
	620-05.01	CONC PARAPET SINGLE SLOPE (STD-1-1SS)	L.F.	289	289		
(6)	710-09.01	6" PERFORATED PIPE WITH VERTICAL DRAIN SYSTEM	L.F.	124		62	62
	710-09.02	6" PIPE UNDERDRAIN	L.F.	28		14	14

FOOTNOTES:

(1) **NOTE:** SEE PROJECT COMMITMENTS AND SPECIAL PROVISION 202ACM.

(2) **NOTE:** LUMP SUM, TO INCLUDE COMPLETE REMOVAL OF EXISTING BRIDGE NO. 86-SR107-05.22 TO NATURAL GROUND BETWEEN STA. 210+27 AND STA. 211+92. EXISTING BRIDGE CONSISTS OF 5 SPANS CONCRETE DECK GIRDERS WITH CONCRETE WALL PIER SUBSTRUCTURES. BRIDGE LENGTH IS 165'-0" AND 34'-6" WIDE.

(3) **NOTE:** PRIOR TO CONSTRUCTION OF THE PAVEMENT AT BRIDGE ENDS, THE CONTRACTOR SHALL SUBMIT A PROPOSED BILL OF STEEL TO THE ENGINEER FOR APPROVAL.

(4) **NOTE:** EXCAVATION BASED ON FINAL PROFILE AT ABUTMENTS.

(5) **NOTE:** LUMP SUM: TOTAL ESTIMATED WEIGHT OF 217,450 LBS. OF STRUCTURAL STEEL INCLUDES GIRDERS, CROSS-FRAMES, STIFFENERS, SHEAR CONNECTORS, TAB CONNECTION PLATES, BOLTS, ETC. ALSO SEE STANDARD SPECIFICATIONS SECTIONS 602.49 AND 602.50.

(6) **NOTE:** COST OF POLYETHYLENE SHEETING AND ALL MISCELLANEOUS ITEMS NECESSARY FOR INSTALLATION TO BE INCLUDED IN THE UNIT PRICE BID FOR PERFORATED PIPE.

(7) **NOTE:** THE COST OF BEARING DEVICE INCLUDES ALL MATERIALS AND LABOR NECESSARY FOR THE INSTALLATION OF ANCHOR BOLTS.

(8) **NOTE:** THE COST OF BITUMINOUS-FIBERBOARD AND ALL MISCELLANEOUS JOINT MATERIAL TO BE INCLUDED IN THE UNIT PRICE BID FOR OTHER ITEMS.

(9) **NOTE:** GRANULAR BACKFILL SHALL BE TYPE "A" GRADING "D" MATERIAL. SEE STANDARD DRAWING STD-10-1.

(10) **NOTE:** THE UNIT PRICE BID FOR THE CAST STEEL POINTS SHALL INCLUDE FURNISHING AND INSTALLATION TO THE PILES.

SEALED BY

STATE OF TENNESSEE
DEPARTMENT OF TRANSPORTATION
ESTIMATED QUANTITIES
STATE ROUTE 107
(UNICOI DRIVE)
OVER NORTH INDIAN CREEK
BRIDGE ID NO. 86SR1070007
LOG MILE 5.22
STATION 210+80.00
UNICOI COUNTY
2025

U-94-885

PIN NO.: 124631.00
DESIGN BY: J. SHOULDERS DATE: 03/2025
DRAWN BY: J. SHOULDERS DATE: 04/2025
SUPERVISED BY: AP/GWK DATE: 04/2025
CHECKED BY: J. SHOULDERS DATE: 04/2025

5/16/2025 2:45:33 PM
P:\STRUCTURES\CADD_REGION_1\86-UNICOI\86SR1070007\CADD\BRIDGE_DRAWINGS\STEEL ALTERNATE\86SR1070007ABQ.DGN

CONST. NO.: 86006-3235-94

PROJECT NO.	YEAR	SHEET NO.
BR-STP-107-(28)	2025	

REVISIONS

NO.	DATE	BY	BRIEF DESCRIPTION
1	05/16/2025	JS	ADDED SHEET

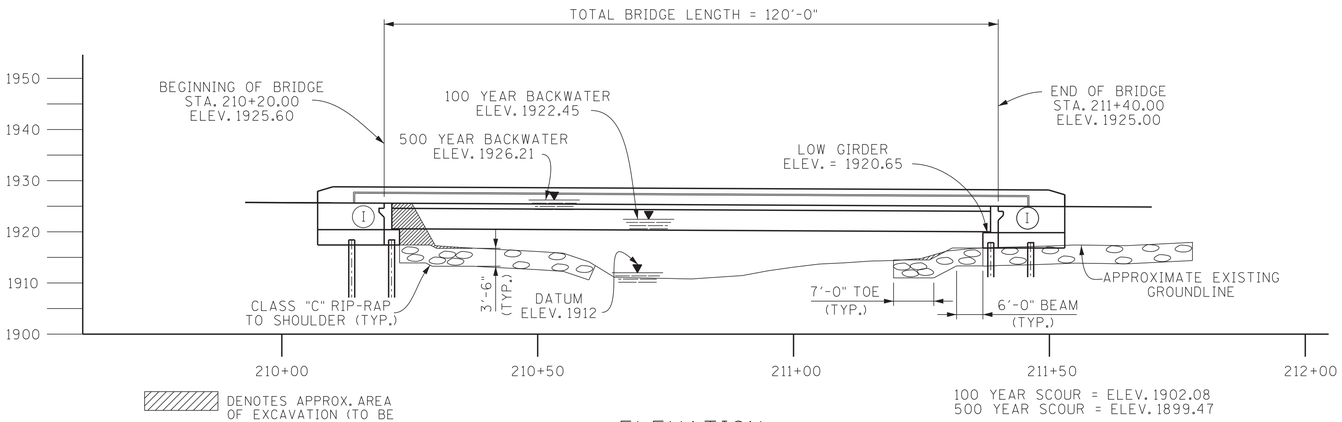

ELEVATION

(SCALE: 1" = 15'-0")

BORING	STATION	OFFSET DISTANCE	GROUND ELEVATION	ROCK ELEVATION	TOTAL DEPTH
B-1	210+34	7.1' LEFT	1916.8'	1879.6'	55.2'
B-2	210+35	7.5' RIGHT	1916.6'	1884.1'	56.2'
B-3	210+99	7.1' LEFT	1913.8'	1891.0'	54.3'
B-4	210+98	8' RIGHT	1912.7'	1871.4'	53.1'
B-5	211+40	7.6' LEFT	1917.0'	1891.9'	42.3'
B-6	211+41	7.7' RIGHT	1916.2'	1888.2'	36.5'

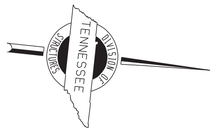

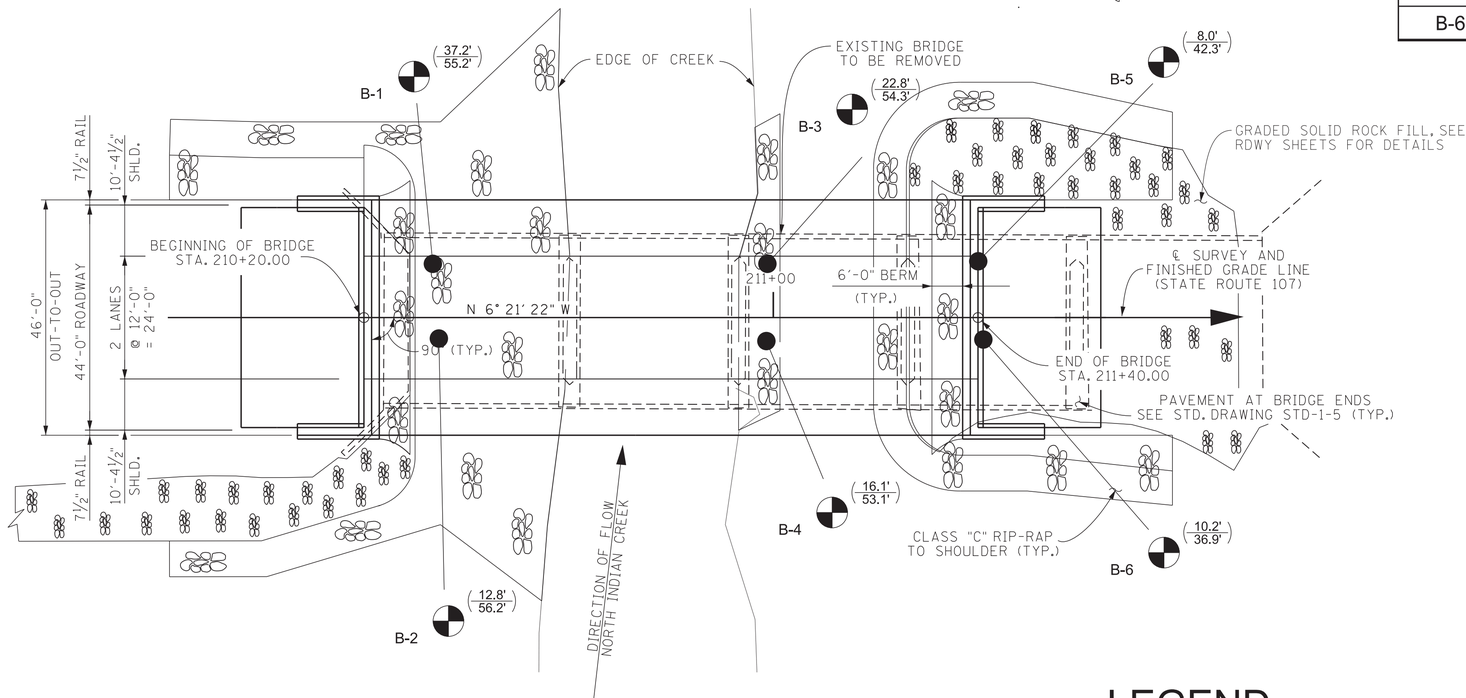

PLAN

(SCALE: 1" = 15'-0")

( )

NOTE: THIS DRAWING IS FOR FOUNDATION DATA ONLY AND IS NOT TO BE USED AS A LAYOUT.

LEGEND

B-1 (24.5'/70.3') — BORING LOCATION. DEPTH TO REFUSAL (ABOVE LINE), BOTTOM OF HOLE (BELOW LINE)

PIN NO.: 124631.00

DESIGN BY:	J. SHOULDERS	DATE: 03/2025
DRAWN BY:	J. SHOULDERS	DATE: 04/2025
SUPERVISED BY:	AP/GWK	DATE: 04/2025
CHECKED BY:	J. SHOULDERS	DATE: 04/2025

STATE OF TENNESSEE
DEPARTMENT OF TRANSPORTATION

FOUNDATION DATA
STATE ROUTE 107
(UNICOI DRIVE)
OVER NORTH INDIAN CREEK
BRIDGE ID NO. 86SR1070007
LOG MILE 5.22
STATION 210+80.00
UNICOI COUNTY
2025

U-94-886

5/16/2025 3:20:35 PM
P:\STRUCTURES\CADD_REGION_1\86-UNICOI\86SR1070007\CADD\BRIDGE_DRAWINGS\STEEL ALTERNATE\86SR1070007AFD.DGN

CONST. NO.: 86006-3235-94

PROJECT NO.	YEAR	SHEET NO.
BR-STP-107-(28)	2025	

REVISIONS

NO.	DATE	BY	BRIEF DESCRIPTION
1	05/16/2025	JS	ADDED SHEET

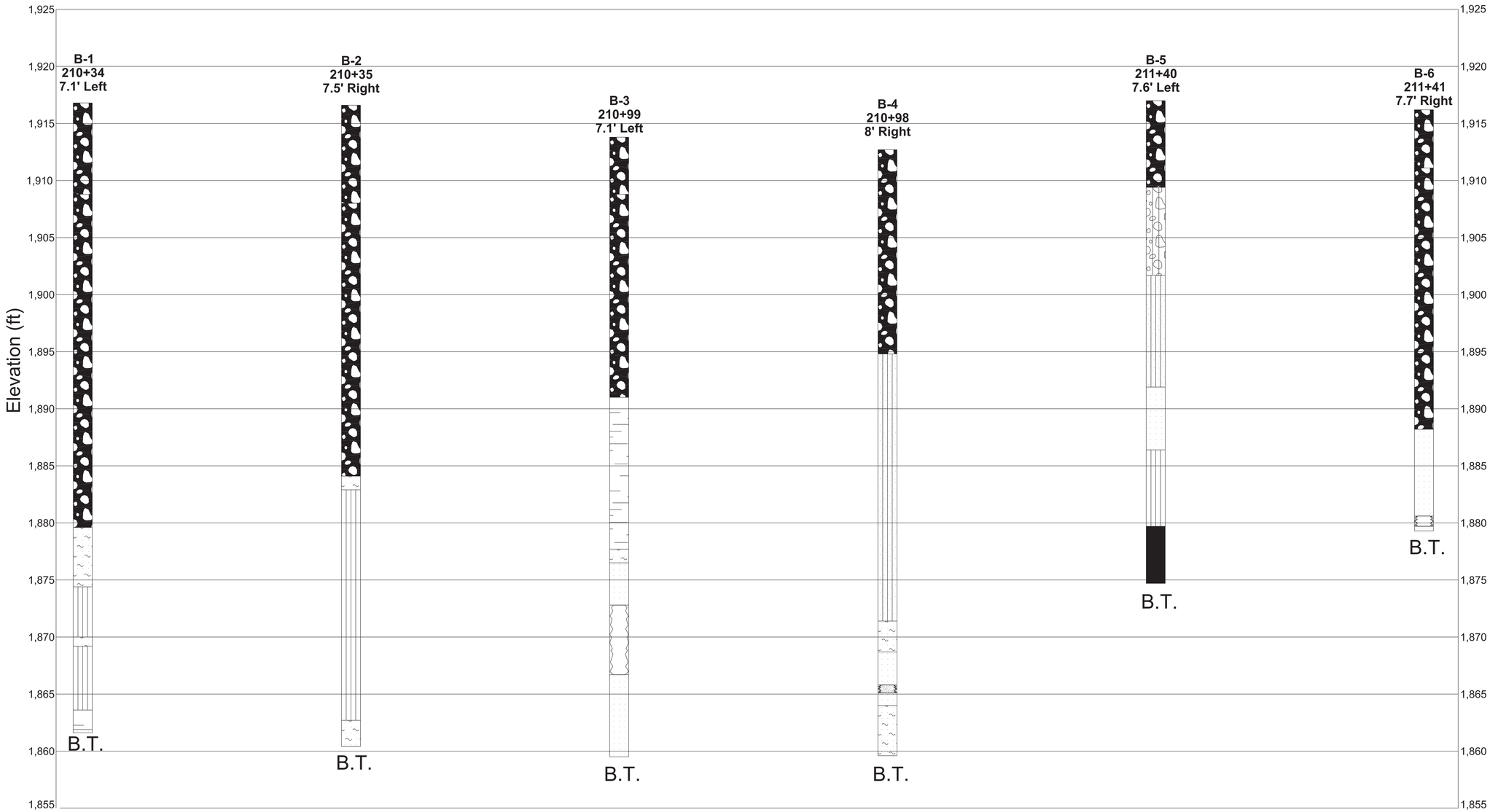

LEGEND

- NO CORE RECOVERED
- CAVITY OR VOID
- SOIL FILLED VOID (TYPE A MATERIAL)
- SILT WITH SHALE FRAGMENTS (TYPE A MATERIAL)
- SILTY SAND (TYPE A MATERIAL)
- SILT WITH COBBLES (TYPE A MATERIAL)
- BOULDERS AND COBBLES (TYPE A MATERIAL)
- WEATHERED SHALE (TYPE D MATERIAL)
- WEATHERED SANDSTONE (TYPE D MATERIAL)
- SANDSTONE (TYPE B MATERIAL)

TYPE MATERIAL-SEE DEFINITION OF EARTHWORK TERMS ON GEOTECHNICAL NOTES AND EST. QTYS. SHEET.

B.T.= BORING TERMINATED

PIN NO.: 124631.00

DESIGN BY:	J. SHOULDERS	DATE: 03/2025
DRAWN BY:	J. SHOULDERS	DATE: 04/2025
SUPERVISED BY:	AP/GWK	DATE: 04/2025
CHECKED BY:	J. SHOULDERS	DATE: 04/2025

STATE OF TENNESSEE
DEPARTMENT OF TRANSPORTATION

FOUNDATION DATA
STATE ROUTE 107
(UNICOI DRIVE)
OVER NORTH INDIAN CREEK
BRIDGE ID NO. 86SR1070007
LOG MILE 5.22
STATION 210+80.00
UNICOI COUNTY
2025

U-94-887

5/16/2025 2:43:33 PM
P:\STRUCTURES\CADD_REGION_1\86-UNICOI\86SR1070007\CADD\BRIDGE_DRAWINGS\STEEL ALTERNATE\86SR1070007AFD.DGN

CONST. NO.: 86006-3235-94

PROJECT NO.	YEAR	SHEET NO.
BR-STP-107-(28)	2025	

REVISIONS

NO.	DATE	BY	BRIEF DESCRIPTION
1	05/16/2025	JS	ADDED SHEET

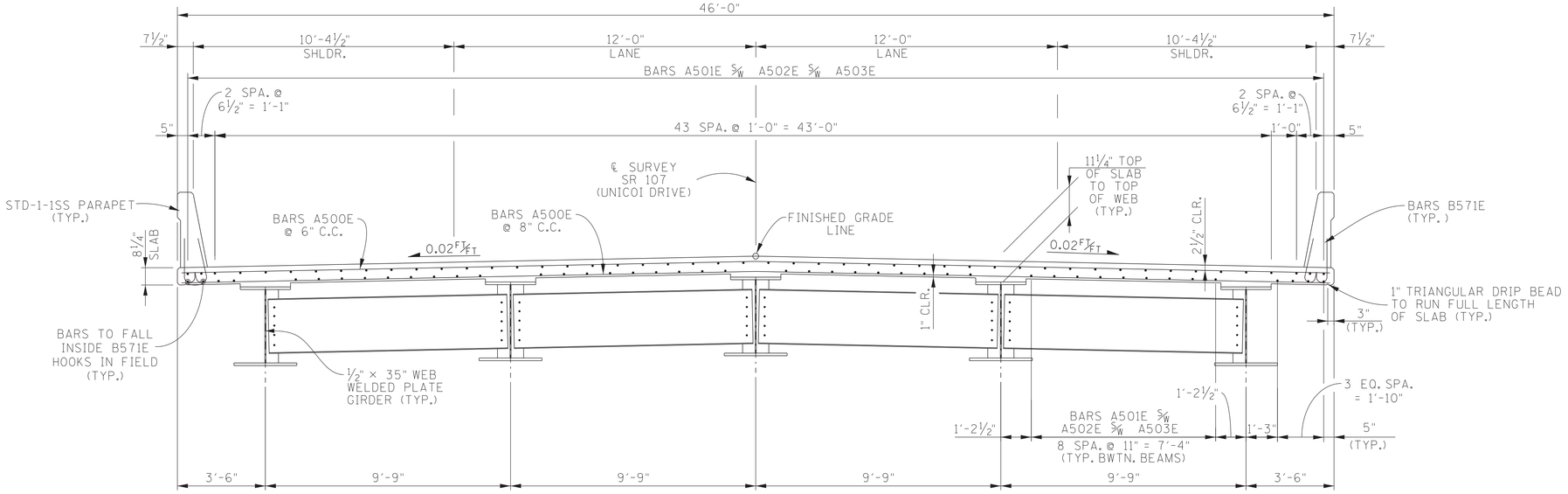

TYPICAL CROSS SECTION
(LOOKING FORWARD ON SURVEY)

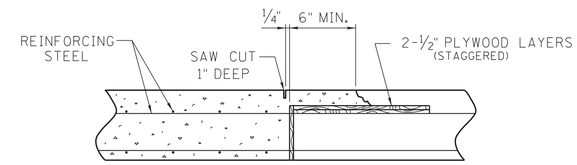

SLAB CONSTRUCTION JOINT DETAIL

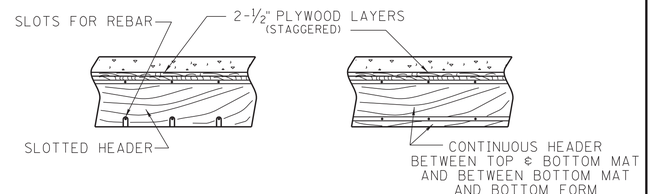

ALTERNATE "A" ALTERNATE "B"

ALTERNATE HEADER DETAILS

DECK CONCRETE POURING SEQUENCE: SLAB CONSTRUCTION JOINTS MAY BE LOCATED AT THE CONTRACTOR'S OPTION SUBJECT TO THE FOLLOWING:

1. NO CONSTRUCTION JOINT SHALL BE LOCATED CLOSER THAN 10 FEET OR FURTHER THAN 15 FEET FROM AN INTERIOR SUPPORT.
2. THE SLAB IN THE MIDDLE SECTION OF BOTH ADJACENT SPANS MUST BE POURED TO WITHIN AT LEAST 15 FEET OF THE SUPPORTS EITHER PRIOR TO OR CONCURRENTLY WITH THE SLAB OVER AN INTERIOR SUPPORT.
3. ALL SLAB CONSTRUCTION JOINTS SHALL BE IN ACCORDANCE WITH THE SLAB CONSTRUCTION JOINT DETAILS SHOWN ON THIS SHEET.

NOTES:

ALL SLAB CONSTRUCTION JOINTS SHALL BE IN ACCORDANCE WITH THE SLAB CONSTRUCTION JOINT DETAILS SHOWN ON THIS SHEET.

THE CONTRACTOR SHALL MAKE ADEQUATE PROVISIONS DURING PLACEMENT OF THE SLAB TO PREVENT THE EXTERIOR GIRDERS FROM TWISTING.

NOTE: NO PORTION OF THE PARAPET SHALL BE POURED UNTIL THE ENTIRE DECK SLAB IS IN PLACE.

NOTE: THE CONCRETE DECK SHALL NOT BE POURED UNTIL ALL STRUCTURAL STEEL IS ERECTED AND ALL WELDING AND/OR BOLTING IS COMPLETE.

NOTE: WHEN POURING SLAB, PROVISIONS SHALL BE MADE FOR SETTING REINFORCING STEEL FOR PARAPETS. THE PARAPETS SHALL NOT BE POURED UNTIL THE SLAB IS POURED AND CURED. ALSO SEE STD. DWG. NO. STD-1-1SS.

IDENTITY OF MAIN MATERIALS: SEE SECTION 602 OF THE STANDARD SPECIFICATIONS.

STRUCTURAL STEEL: SHALL CONFORM TO ASTM A709 GRADE 50W UNLESS OTHERWISE NOTED. ALL STRUCTURAL STEEL FOR GIRDER FLANGES IN TENSION AND ALL WEBS SHALL MEET THE SUPPLEMENTAL REQUIREMENTS FOR LONGITUDINAL CHARPY V-NOTCH TESTS SPECIFIED IN THE ASTM SPECIFICATIONS. ZONE 2 OF NON-FRACTURE CRITICAL SHALL APPLY.

WELDING: AASHTO/AWS D1.5-CURRENT EDITION BRIDGE WELDING CODE AND SECTION 602 OF THE STANDARD SPECIFICATIONS.

ADDITIONAL SHOP SPLICE NOTE: SHOP SPLICES NECESSARY DUE TO LENGTHS OR SIZE OF MATERIAL INVOLVED MAY BE ADDED BY THE FABRICATOR SUBJECT TO APPROVAL BY THE ENGINEER AND SHALL BE AT NO ADDITIONAL COST TO THE PROJECT.

ADDITIONAL FIELD SPLICE NOTE: FIELD SPLICES NECESSARY DUE TO LENGTHS INVOLVED MAY BE ADDED BY THE FABRICATOR SUBJECT TO APPROVAL BY THE ENGINEER AND SHALL BE AT NO ADDITIONAL COST TO THE PROJECT.

FIELD SPLICE NOTE: FIELD SPLICES SHOWN ON THE PLANS MAY BE DELETED BY THE CONTRACTOR. ADJUSTMENT TO THE LUMP SUM PRICE FOR STEEL STRUCTURES SHALL BE IN ACCORDANCE WITH THE STANDARD SPECIFICATIONS.

GIRDER ERECTION: GIRDERS MAY HAVE TO BE CRANE-LIFTED, JACKED, NEEDLE-BEAMED, ETC. TO ACHIEVE THE PROPER CROSS-SLOPE AND HOLE ALIGNMENT DURING TRANSVERSE BRACING INSTALLATION. ALL TRANSVERSE BRACING SHALL BE IN PLACE AND ALL BOLTS TENSIONED TO THE PLANS SPECIFIED VALUES PRIOR TO THE SLAB POUR. ALL COSTS OF TRANSVERSE BRACING INSTALLATION TO BE INCLUDED IN THE LUMP SUM COST OF STEEL STRUCTURES.

GIRDER TRANSVERSE BRACING: GIRDER TRANSVERSE BRACING SHALL BE FABRICATED FOR TOTAL CAMBER MINUS GIRDER SELF WEIGHT CAMBER.

SHEAR CONNECTORS: SHEAR CONNECTOR MATERIAL SHALL BE COLD-DRAWN ASTM A108 GRADE 1015, 1018, OR 1020, EITHER SEMI OR FULLY KILLED, AND HAVE SPECIFIED MINIMUM YIELD AND TENSILE STRENGTHS OF 50 KSI AND 60 KSI, RESPECTIVELY.

SEALED BY

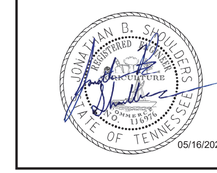

STATE OF TENNESSEE
DEPARTMENT OF TRANSPORTATION
SUPERSTRUCTURE
STATE ROUTE 107
(UNICOI DRIVE)
OVER NORTH INDIAN CREEK
BRIDGE ID NO. 86SR1070007
LOG MILE 5.22
STATION 210+80.00
UNICOI COUNTY
2025

U-94-888

PIN NO.: 124631.00
DESIGN BY: J. SHOULDERS DATE: 03/2025
DRAWN BY: J. SHOULDERS DATE: 04/2025
SUPERVISED BY: AP/GWK DATE: 04/2025
CHECKED BY: J. SHOULDERS DATE: 04/2025

5/16/2025 2:29:51 PM
P:\STRUCTURES\CADD_REGION_1\86-UNICOI\86SR1070007\CADD\BRIDGE_DRAWINGS\STEEL ALTERNATE\86SR1070007ASUP1.SHT

CONST. NO.: 86006-3235-94

PROJECT NO.	YEAR	SHEET NO.
BR-STP-107-(28)	2025	

REVISIONS

NO.	DATE	BY	BRIEF DESCRIPTION
1	05/16/2025	JS	ADDED SHEET

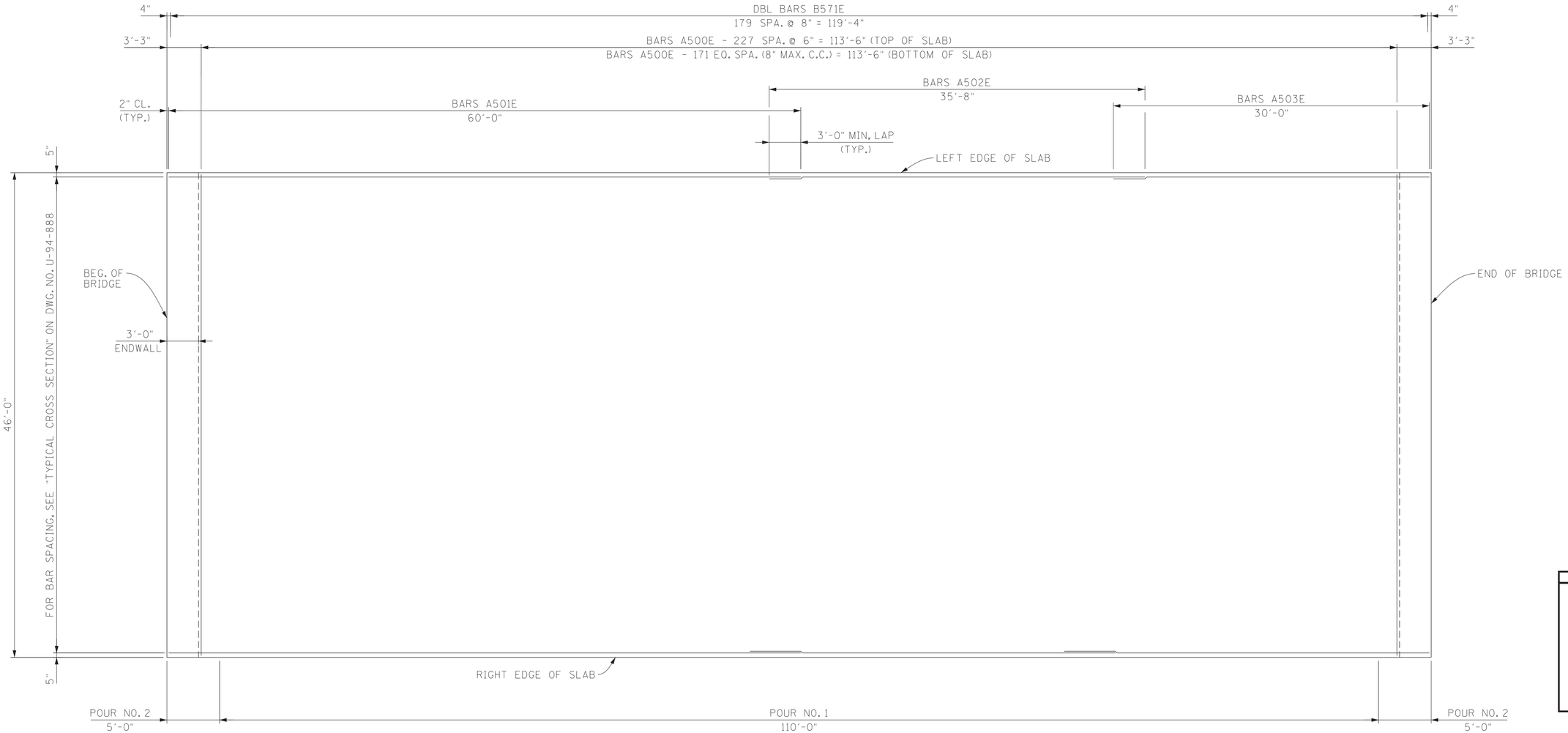

SEALED BY

SLAB PLAN

ALL SLAB POURS SHALL BE MADE IN NUMERICAL SEQUENCE.

PIN NO.: 124631.00

DESIGN BY:	J. SHOULDERS	DATE:	03/2025
DRAWN BY:	J. SHOULDERS	DATE:	04/2025
SUPERVISED BY:	AP/GWK	DATE:	04/2025
CHECKED BY:	J. SHOULDERS	DATE:	04/2025

STATE OF TENNESSEE
DEPARTMENT OF TRANSPORTATION
SUPERSTRUCTURE DETAILS
STATE ROUTE 107
(UNICOI DRIVE)
OVER NORTH INDIAN CREEK
BRIDGE ID NO. 86SR1070007
LOG MILE 5.22
STATION 210+80.00
UNICOI COUNTY
2025

U-94-889

5/16/2025 2:27:16 PM
P:\STRUCTURES\CADD_REGION_1186-UNICOI\86SR1070007\CADD\BRIDGE_DRAWINGS\STEEL ALTERNATE\86SR1070007ASUP2.SHT

CONST. NO.: 86006-3235-94

PROJECT NO.	YEAR	SHEET NO.
BR-STP-107-(28)	2025	

REVISIONS

NO.	DATE	BY	BRIEF DESCRIPTION
1	05/16/2025	JS	ADDED SHEET

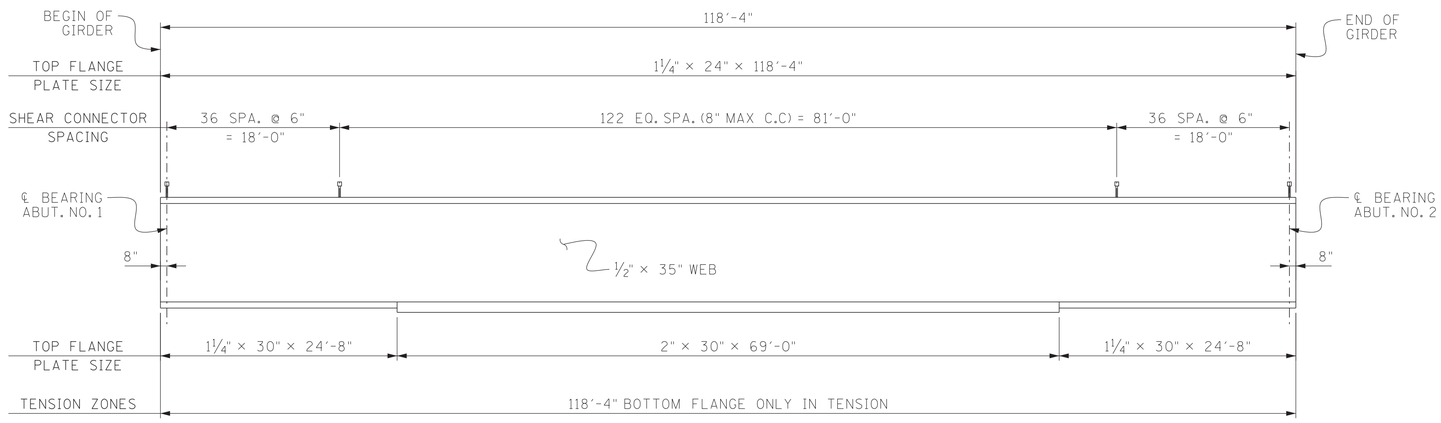

GIRDER ELEVATION

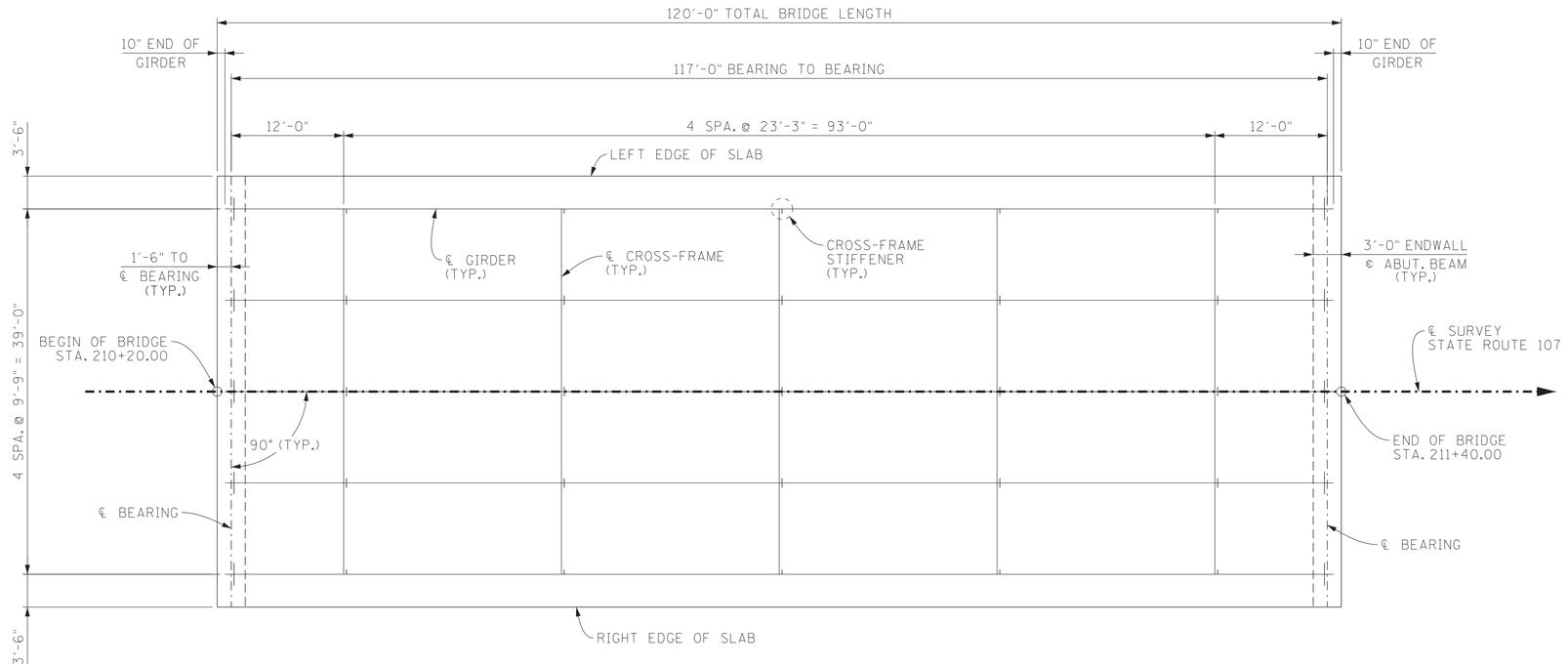

FRAMING PLAN

	DEAD LOAD CAMBER (VALUES SHOWN ARE IN DECIMAL INCHES)										
SPAN POINT	1	1.1	1.2	1.3	1.4	1.5	1.6	1.7	1.8	1.9	2
GIRDER	0	0.578	1.083	1.472	1.718	1.803	1.718	1.472	1.083	0.578	0
SLAB	0	1.746	3.268	4.432	5.171	5.424	5.172	4.433	3.269	1.746	0
SUPERIMPOSED	0	0.374	0.697	0.944	1.099	1.153	1.100	0.944	0.698	0.374	0
TOTAL	0	2.697	5.048	6.847	7.988	8.379	7.990	6.848	5.050	2.697	0

DEAD LOAD CORRECTION DATA

GIRDERS SHALL BE CAMBERED TO COMPENSATE FOR DEAD LOAD DEFLECTION.

SEALED BY

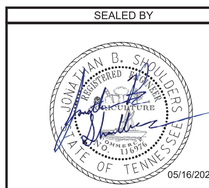

PIN NO.: 124631.00
DESIGN BY: J. SHOULDERS DATE: 03/2025
DRAWN BY: J. SHOULDERS DATE: 04/2025
SUPERVISED BY: AP/GWK DATE: 04/2025
CHECKED BY: J. SHOULDERS DATE: 04/2025

5/16/2025 2:32:58 PM
P:\STRUCTURES\CADD_REGION_1\86-UNICOI\86SR1070007\CADD\BRIDGE_DRAWINGS\STEEL ALTERNATE\86SR1070007ASTL1.SHT

STATE OF TENNESSEE
DEPARTMENT OF TRANSPORTATION
STRUCTURAL STEEL DETAILS
STATE ROUTE 107
(UNICOI DRIVE)
OVER NORTH INDIAN CREEK
BRIDGE ID NO. 86SR1070007
LOG MILE 5.22
STATION 210+80.00
UNICOI COUNTY
2025

U-94-890

CONST. NO.: 86006-3235-94

PROJECT NO.	YEAR	SHEET NO.
BR-STP-107-(28)	2025	

REVISIONS

NO.	DATE	BY	BRIEF DESCRIPTION
1	05/16/2025	JS	ADDED SHEET

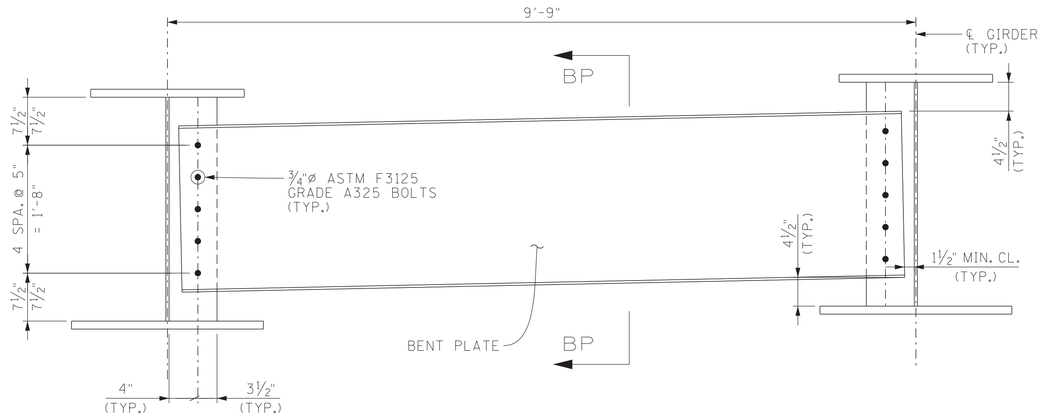

INTERMEDIATE CROSS-FRAME DETAILS

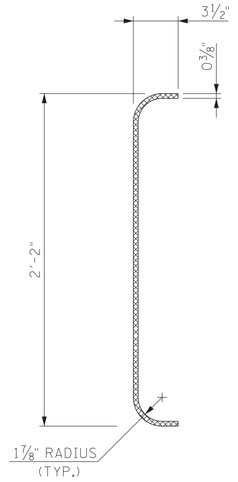

SECTION BP-BP

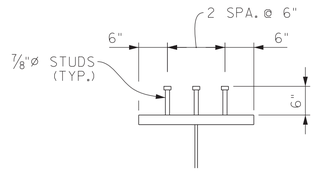

SHEAR CONNECTORS

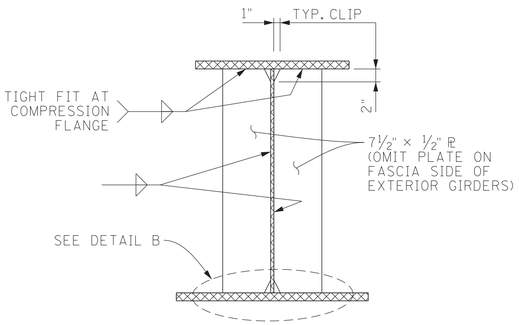

CROSS-FRAME STIFFENER

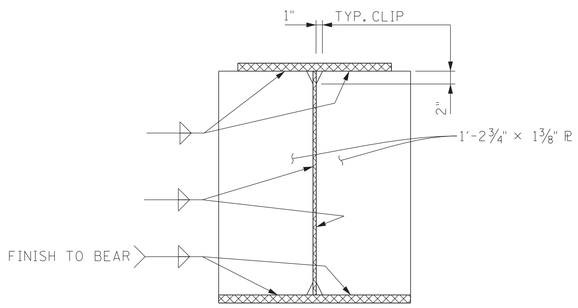

BEARING STIFFENER

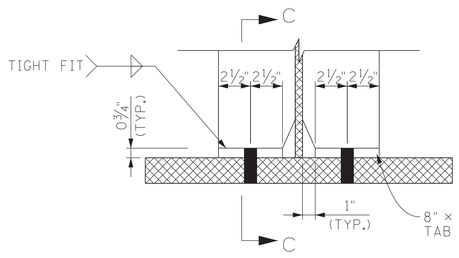

DETAIL B
(TENSION FLANGE CONNECTION)

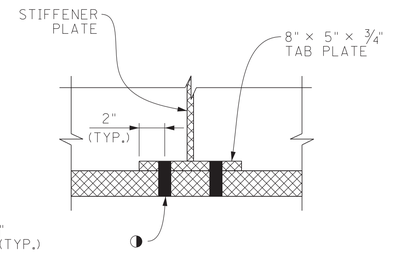

SECTION C

NOTE: BOLTS SHALL BE 1"ø - ASTM F3125 GRADE A325 BOLTS.

◑ DENOTES: BOLTS TO BE TENSIONED TO AASHTO SPECIFICATION FOR SLIP-CRITICAL CONNECTION PRIOR TO STIFFENER-TO-TAB PLATE WELDING.

SEALED BY

JONATHAN B. SHOULDERS REGISTERED PROFESSIONAL ENGINEER STRUCTURE STATE OF TENNESSEE

05/16/2025

PIN NO.: 124631.00

DESIGN BY:	J. SHOULDERS	DATE:	03/2025
DRAWN BY:	J. SHOULDERS	DATE:	04/2025
SUPERVISED BY:	AP/GWK	DATE:	04/2025
CHECKED BY:	J. SHOULDERS	DATE:	04/2025

STATE OF TENNESSEE
DEPARTMENT OF TRANSPORTATION

STRUCTURAL STEEL DETAILS
STATE ROUTE 107
(UNICOI DRIVE)
OVER NORTH INDIAN CREEK
BRIDGE ID NO. 86SR1070007
LOG MILE 5.22
STATION 210+80.00
UNICOI COUNTY
2025

U-94-891

5/16/2025 2:31:34 PM
P:\STRUCTURES\CADD_REGION_1\86-UNICOI\86SR1070007\CADD\BRIDGE_DRAWINGS\STEEL ALTERNATE\86SR1070007ASTL2.DGN

CONST. NO.: 86006-3235-94

PROJECT NO.	YEAR	SHEET NO.
BR-STP-107-(28)	2025	

REVISIONS

NO.	DATE	BY	BRIEF DESCRIPTION
1	05/16/2025	JS	ADDED SHEET

F.S. DENOTES: FAR SIDE
N.S. DENOTES: NEAR SIDE
P.C.O. DENOTES: PILE CUT OFF

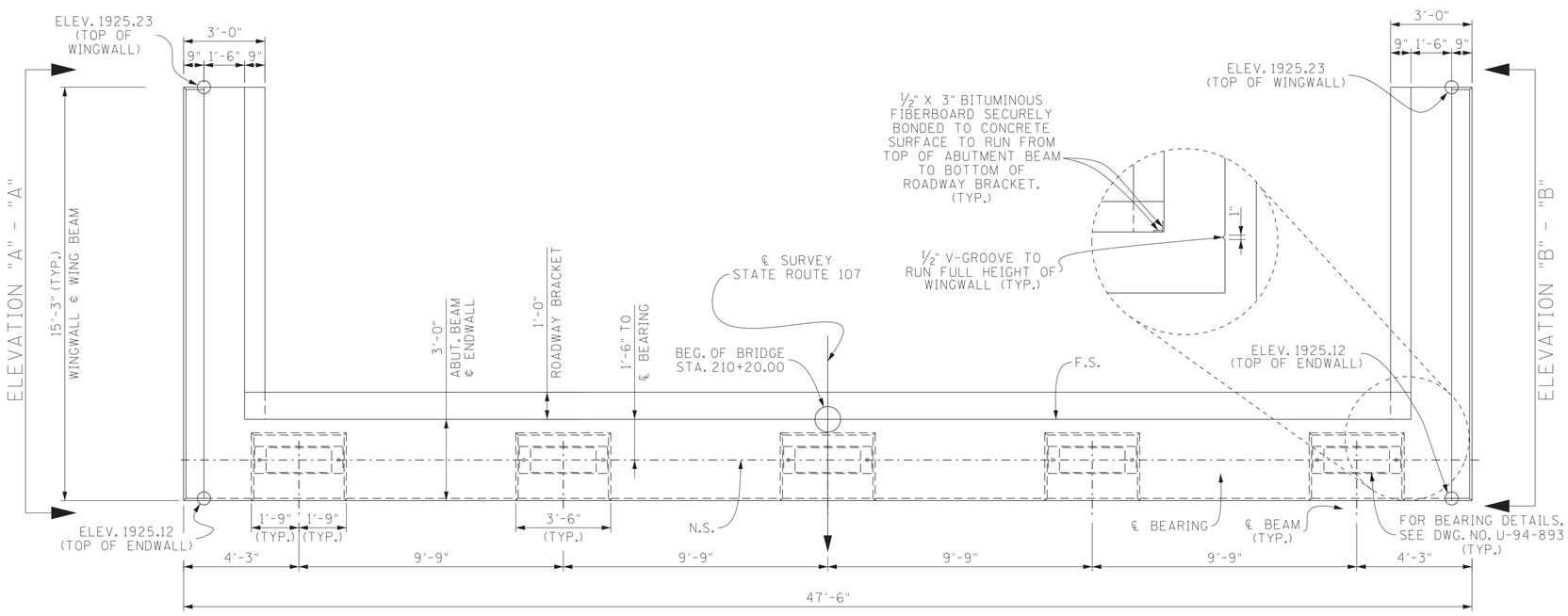

PLAN

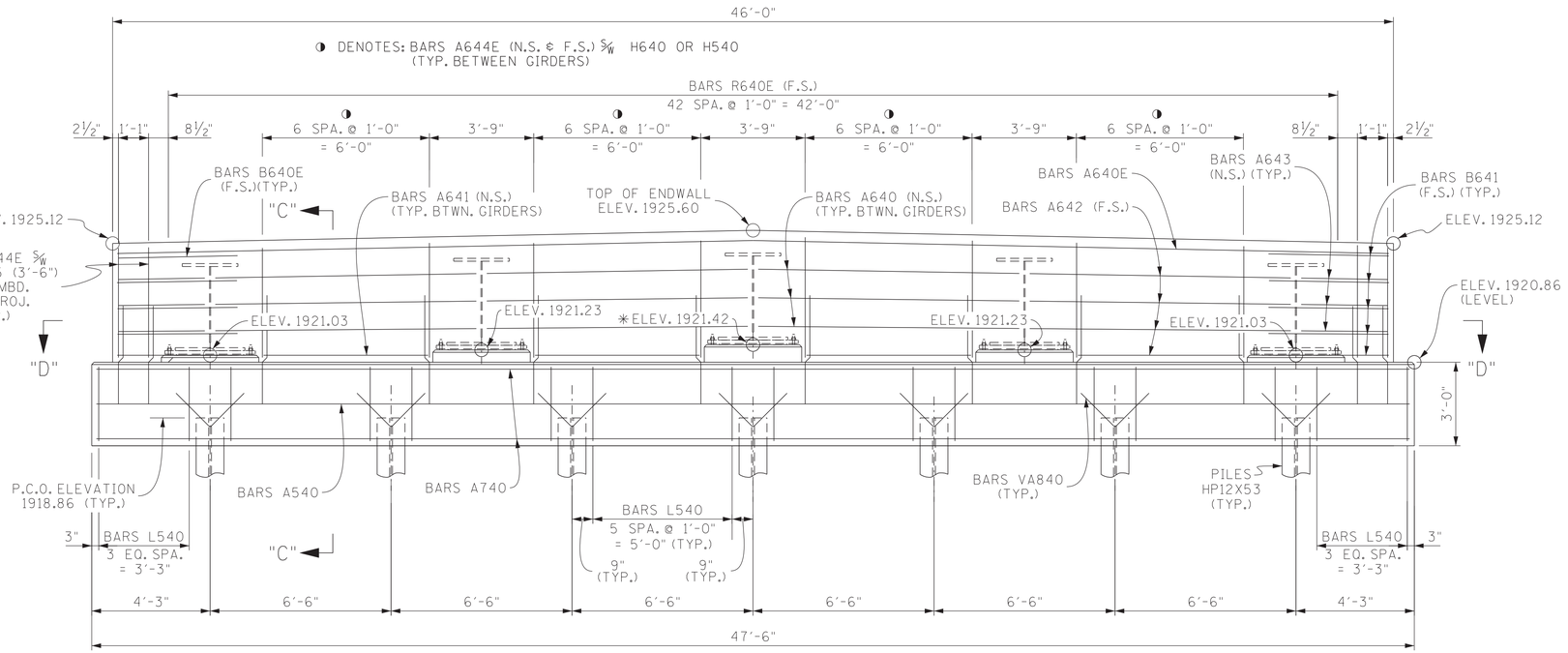

ELEVATION
(LOOKING BACK ON SURVEY)

✳DENOTES: RISER BLOCK TO BE REINFORCED.
SEE RISER BLOCK REINFORCING DETAIL THIS SHEET.

NOTES

NOTE: WHEN POURING WINGWALLS, PROVISIONS SHALL BE MADE FOR SETTING REINFORCING STEEL FOR WINGPOSTS AND BRIDGE RAILS. FOR DETAILS OF WINGPOST AND PARAPETS SEE STANDARD DWG. NO. STD-1-1SS.

NOTE: RISER BLOCKS SHALL BE POURED MONOLITHICALLY WITH THE ABUTMENT BEAM.

NOTE: COST OF PARAPET AND POST IS TO BE INCLUDED IN THE UNIT PRICE BID FOR THE PARAPET SYSTEM.

NOTE: THE ENTIRE ABUTMENT ENDWALL SHALL BE POURED CONCURRENTLY WITH POUR NO. 2. SEE DWG. NO. U-94-889 FOR DETAILS.

NOTE: WINGBEAM PILES SHALL BE DRIVEN TO THE PLANS TIP ELEVATION OR REFUSAL. SEISMIC ATTACHMENT IS NOT REQUIRED FOR WINGBEAM PILES.

NOTE: SEE STANDARD DRAWING STD-6-1 FOR PILE SEISMIC ATTACHMENT DETAILS AND NOTES.

NOTE: FOR ELEVATION “A”-“A”, ELEVATION “B”-“B” AND SECTION “D”-“D” SEE DWG. NO. U-94-894.

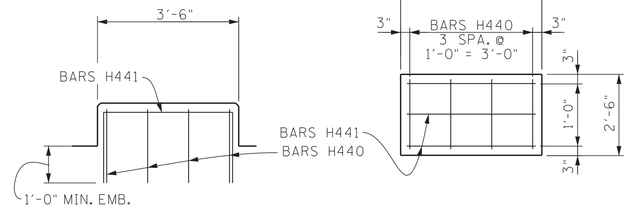

ELEVATION PLAN

RISER BLOCK REINFORCING DETAIL

SEALED BY

JONATHAN D. SHOULDERS
REGISTERED
PROFESSIONAL ENGINEER
STRUCTURE
No. 124631
STATE OF TENNESSEE
05/16/2025

PIN NO.: 124631.00

DESIGN BY:	J. SHOULDERS	DATE: 03/2025
DRAWN BY:	J. SHOULDERS	DATE: 04/2025
SUPERVISED BY:	AP/GWK	DATE: 04/2025
CHECKED BY:	J. SHOULDERS	DATE: 04/2025

STATE OF TENNESSEE
DEPARTMENT OF TRANSPORTATION

ABUTMENT NO. 1
STATE ROUTE 107
(UNICOI DRIVE)
OVER NORTH INDIAN CREEK
BRIDGE ID NO. 86SR1070007
LOG MILE 5.22
STATION 210+80.00
UNICOI COUNTY
2025

U-94-892

5/16/2025 3:06:23 PM
P:\STRUCTURES\CADD_REGION_1\86-UNICOI\86SR1070007\CADD\BRIDGE_DRAWINGS\STEEL ALTERNATE\86SR1070007AABT1.SHT

CONST. NO.: 86006-3235-94

PROJECT NO.	YEAR	SHEET NO.
BR-STP-107-(28)	2025	

REVISIONS

NO.	DATE	BY	BRIEF DESCRIPTION
1	05/16/2025	JS	ADDED SHEET

F.S. DENOTES: FAR SIDE
N.S. DENOTES: NEAR SIDE
P.C.O. DENOTES: PILE CUT OFF

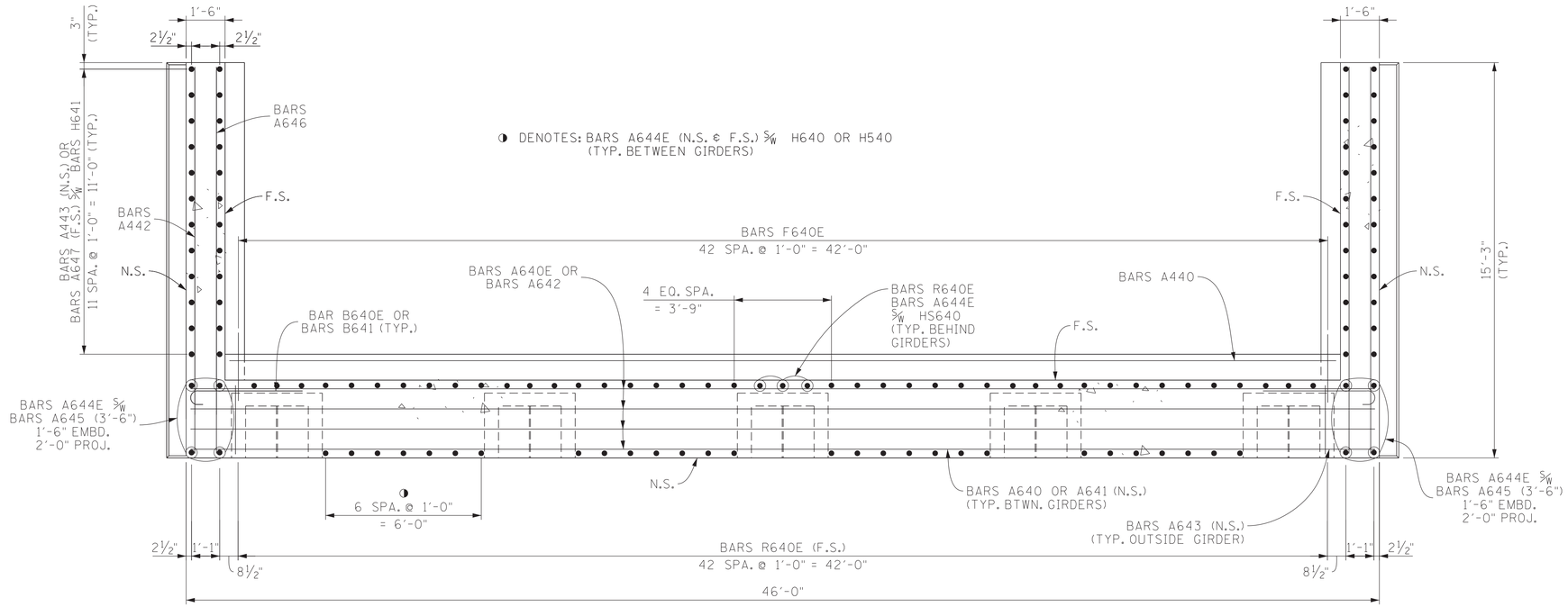

SECTION "D"-"D"

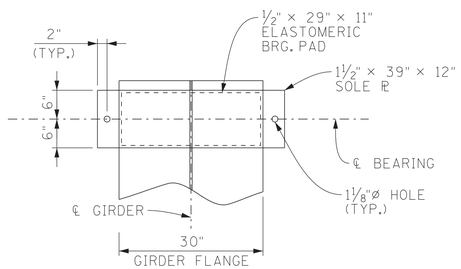

PLAN

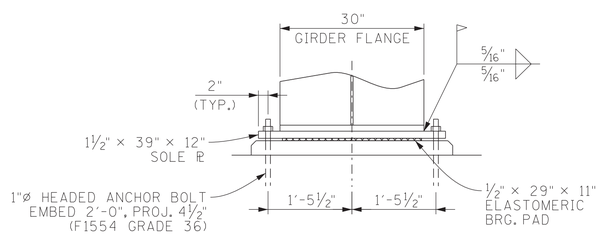

ELEVATION

BEARING DETAIL

NOTE: ELASTOMERIC PAD TO BE VULCANIZED TO SOLE PLATE.
NOTE: ELASTOMERIC PAD SHALL HAVE A SHEAR MODULUS BETWEEN 0.080 AND 0.175 KSI.

SEALED BY

PIN NO.: 124631.00

DESIGN BY:	J. SHOULDERS	DATE: 03/2025
DRAWN BY:	J. SHOULDERS	DATE: 04/2025
SUPERVISED BY:	AP/GWK	DATE: 04/2025
CHECKED BY:	J. SHOULDERS	DATE: 04/2025

STATE OF TENNESSEE
DEPARTMENT OF TRANSPORTATION

ABUTMENT NO. 1 DETAILS
STATE ROUTE 107
(UNICOI DRIVE)
OVER NORTH INDIAN CREEK
BRIDGE ID NO. 86SR1070007
LOG MILE 5.22
STATION 210+80.00
UNICOI COUNTY
2025

U-94-893

5/16/2025 3:05:00 PM
P:\STRUCTURES\CADD_REGION_1186-UNICOI\86SR1070007\CADD\BRIDGE_DRAWINGS\STEEL ALTERNATE\86SR1070007AABT1A.SHT

CONST. NO.: 86006-3235-94

PROJECT NO.	YEAR	SHEET NO.
BR-STP-107-(28)	2025	

REVISIONS

NO.	DATE	BY	BRIEF DESCRIPTION
1	05/16/2025	JS	ADDED SHEET

F.S. DENOTES: FAR SIDE
N.S. DENOTES: NEAR SIDE
P.C.O. DENOTES: PILE CUT OFF

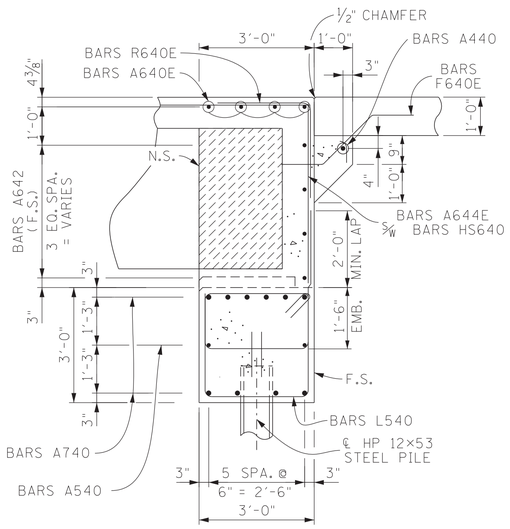

SECTION "C"-"C"
(TYP. @ GIRDERS)

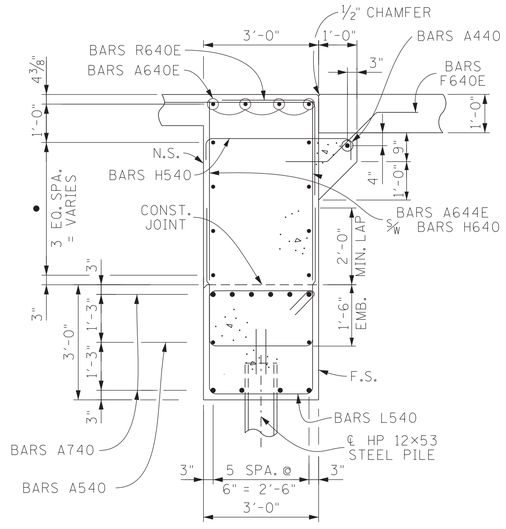

• DENOTES: BARS A640 OR A641 (N.S.)

SECTION "C"-"C"
(TYP. BETWEEN GIRDERS)

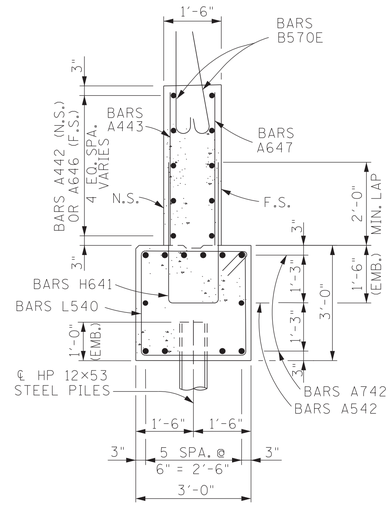

SECTION "E"-"E"

♦ DENOTES: BARS H400E - 2 SPA. @ 6" = 1'-0"
● DENOTES: SERIES BARS HA401E - 4 SPA. @ 6" = 2'-0"
▲ DENOTES: SERIES BARS HA400E - 3 SPA. @ 4¾" = 1'-2¼"

"E"

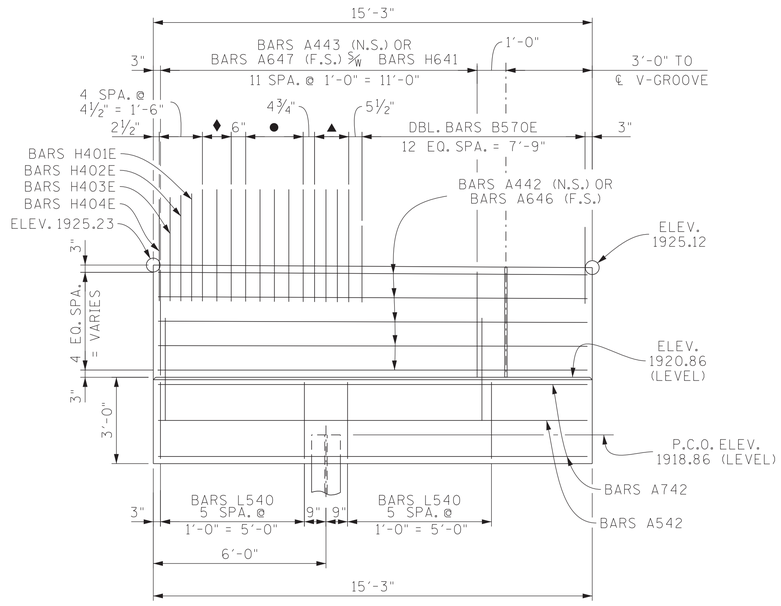

"E"

ELEVATION "A"-"A"

"E"

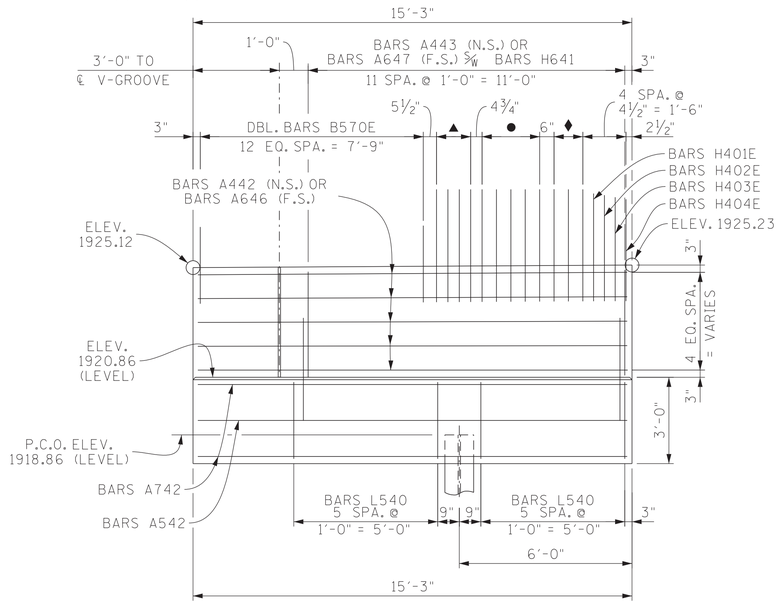

"E"

ELEVATION "B"-"B"

SEALED BY

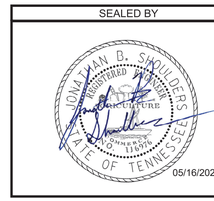

PIN NO.: 124631.00

DESIGN BY:	J. SHOULDERS	DATE: 03/2025
DRAWN BY:	J. SHOULDERS	DATE: 04/2025
SUPERVISED BY:	AP/GWK	DATE: 04/2025
CHECKED BY:	J. SHOULDERS	DATE: 04/2025

STATE OF TENNESSEE
DEPARTMENT OF TRANSPORTATION
ABUTMENT NO. 1 DETAILS
STATE ROUTE 107
(UNICOI DRIVE)
OVER NORTH INDIAN CREEK
BRIDGE ID NO. 86SR1070007
LOG MILE 5.22
STATION 210+80.00
UNICOI COUNTY
2025

U-94-894

5/16/2025 3:03:36 PM
P:\STRUCTURES\CADD_REGION_186-UNICOI\86SR1070007\CADD\BRIDGE_DRAWINGS\STEEL ALTERNATE\86SR1070007AABT1B.SHT

CONST. NO.: 86006-3235-94

PROJECT NO.	YEAR	SHEET NO.
BR-STP-107-(28)	2025	

REVISIONS

NO.	DATE	BY	BRIEF DESCRIPTION
1	05/16/2025	JS	ADDED SHEET

F.S. DENOTES: FAR SIDE
N.S. DENOTES: NEAR SIDE
P.C.O. DENOTES: PILE CUT OFF

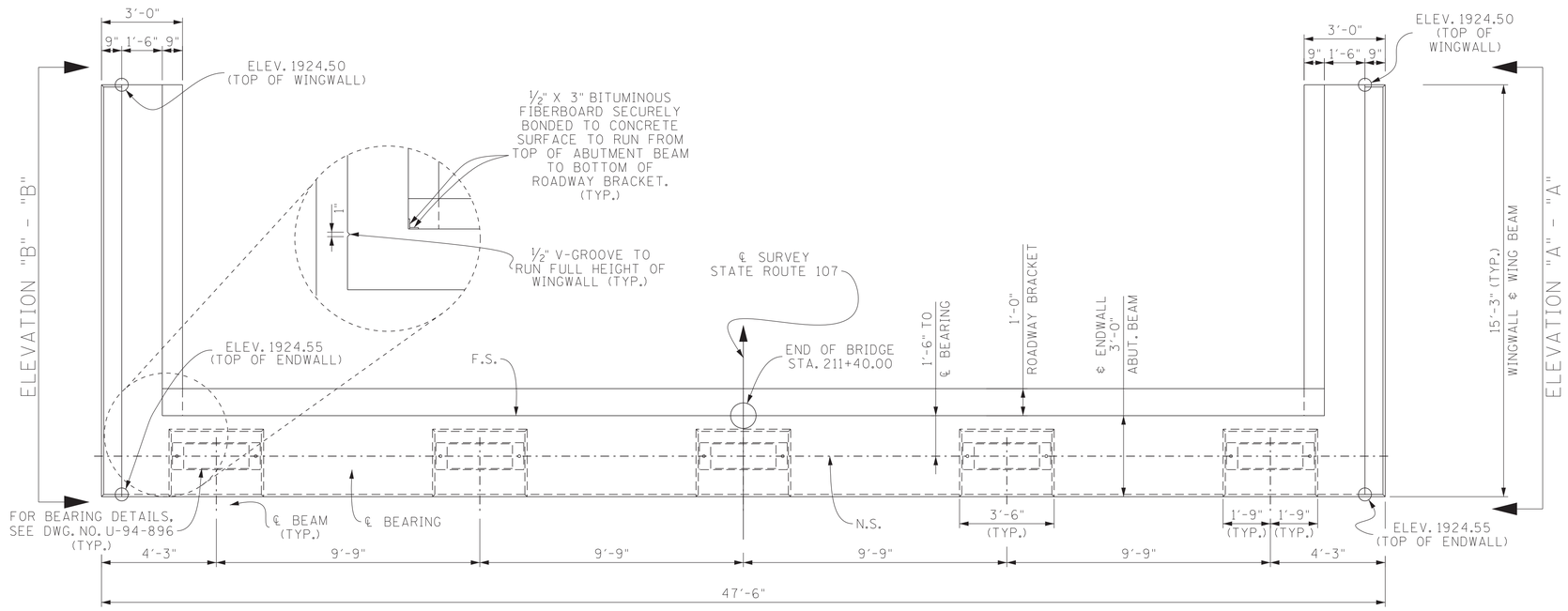

NOTES

NOTE: WHEN POURING WINGWALLS, PROVISIONS SHALL BE MADE FOR SETTING REINFORCING STEEL FOR WINGPOSTS AND BRIDGE RAILS. FOR DETAILS OF WINGPOST AND PARAPETS SEE STANDARD DWG. NO. STD-1-1SS.

NOTE: RISER BLOCKS SHALL BE POURED MONOLITHICALLY WITH THE ABUTMENT BEAM.

NOTE: COST OF PARAPET AND POST IS TO BE INCLUDED IN THE UNIT PRICE BID FOR THE PARAPET SYSTEM.

NOTE: THE ENTIRE ABUTMENT ENDWALL SHALL BE POURED CONCURRENTLY WITH POUR NO. 2. SEE DWG. NO. U-94-889 FOR DETAILS.

NOTE: WINGBEAM PILES SHALL BE DRIVEN TO THE PLANS TIP ELEVATION OR REFUSAL. SEISMIC ATTACHMENT IS NOT REQUIRED FOR WINGBEAM PILES.

NOTE: SEE STANDARD DRAWING STD-6-1 FOR PILE SEISMIC ATTACHMENT DETAILS AND NOTES.

NOTE: FOR ELEVATION "A"-"A", ELEVATION "B"-"B" AND SECTION "D"-"D" SEE DWG. NO. U-94-897.

PLAN

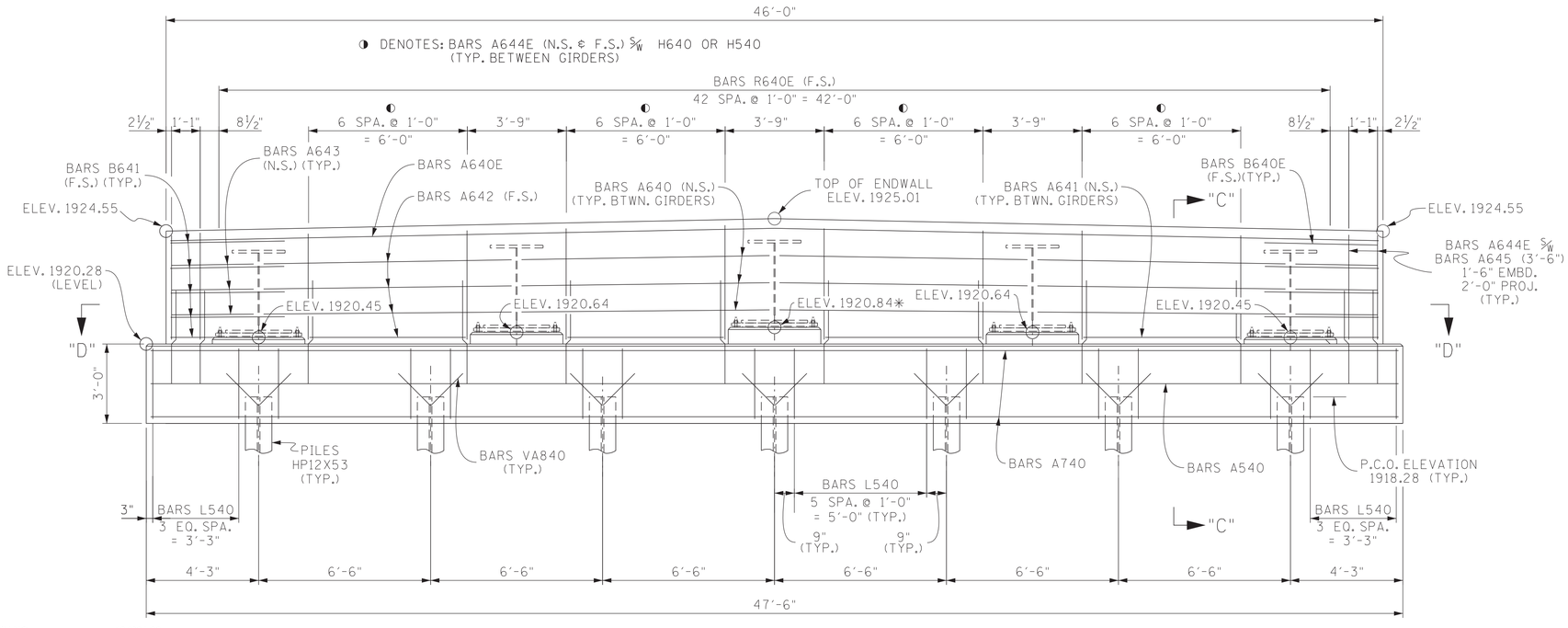

ELEVATION
(LOOKING BACK ON SURVEY)

✳ DENOTES: RISER BLOCK TO BE REINFORCED.
SEE RISER BLOCK REINFORCING DETAIL THIS SHEET.

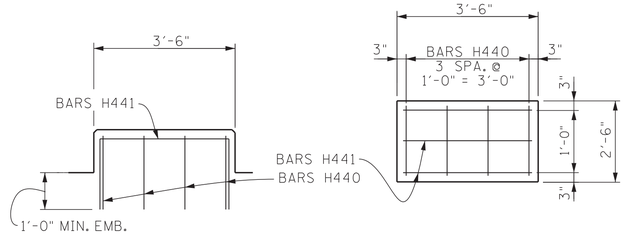

RISER BLOCK REINFORCING DETAIL

SEALED BY

STATE OF TENNESSEE
DEPARTMENT OF TRANSPORTATION
ABUTMENT NO. 2
STATE ROUTE 107
(UNICOI DRIVE)
OVER NORTH INDIAN CREEK
BRIDGE ID NO. 86SR1070007
LOG MILE 5.22
STATION 210+80.00
UNICOI COUNTY
2025

U-94-895

PIN NO.: 124631.00

DESIGN BY:	J. SHOULDERS	DATE: 03/2025
DRAWN BY:	J. SHOULDERS	DATE: 04/2025
SUPERVISED BY:	AP/GWK	DATE: 04/2025
CHECKED BY:	J. SHOULDERS	DATE: 04/2025

5/16/2025 3:00:18 PM
P:\STRUCTURES\CADD_REGION_1\86-UNICOI\86SR1070007\CADD\BRIDGE_DRAWINGS\STEEL ALTERNATE\86SR1070007AABT2.SHT

CONST. NO.: 86006-3235-94

PROJECT NO.	YEAR	SHEET NO.
BR-STP-107-(28)	2025	

REVISIONS

NO.	DATE	BY	BRIEF DESCRIPTION
1	05/16/2025	JS	ADDED SHEET

F.S. DENOTES: FAR SIDE
N.S. DENOTES: NEAR SIDE
P.C.O. DENOTES: PILE CUT OFF

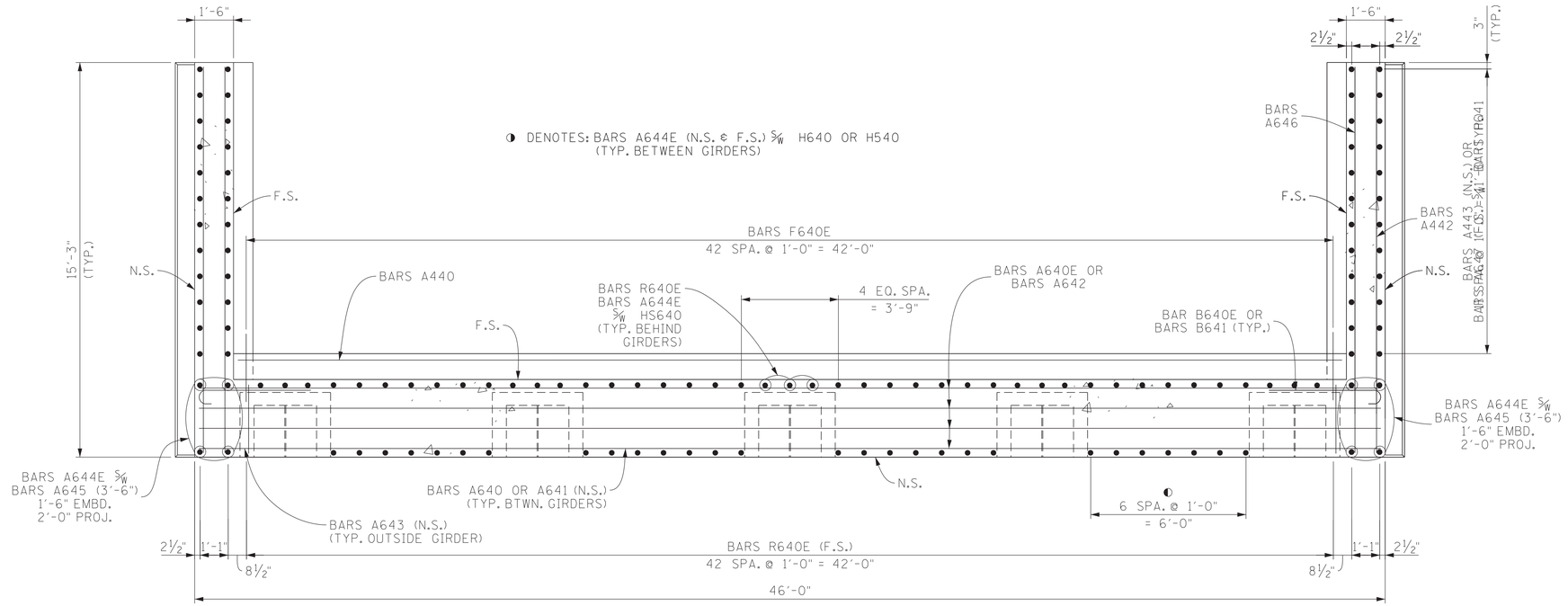

SECTION "D"-"D"

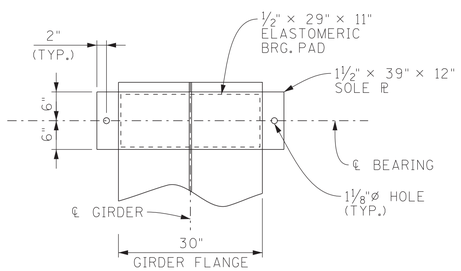

PLAN

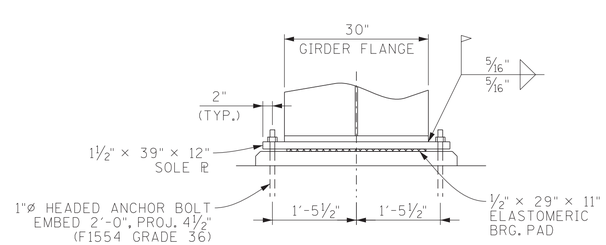

ELEVATION

BEARING DETAIL

NOTE: ELASTOMERIC PAD TO BE VULCANIZED TO SOLE PLATE.
NOTE: ELASTOMERIC PAD SHALL HAVE A SHEAR MODULUS BETWEEN 0.080 AND 0.175 KSI.

SEALED BY

JONATHAN D. SHOULDERS REGISTERED PROFESSIONAL ENGINEER STATE OF TENNESSEE
05/16/2025

PIN NO.: 124631.00
DESIGN BY: J. SHOULDERS DATE: 03/2025
DRAWN BY: J. SHOULDERS DATE: 04/2025
SUPERVISED BY: AP/GWK DATE: 04/2025
CHECKED BY: J. SHOULDERS DATE: 04/2025

STATE OF TENNESSEE
DEPARTMENT OF TRANSPORTATION
ABUTMENT NO. 2 DETAILS
STATE ROUTE 107
(UNICOI DRIVE)
OVER NORTH INDIAN CREEK
BRIDGE ID NO. 86SR1070007
LOG MILE 5.22
STATION 210+80.00
UNICOI COUNTY
2025

U-94-896

5/16/2025 2:58:15 PM
P:\STRUCTURES\CADD_REGION_1186-UNICOI\86SR1070007\CADD\BRIDGE_DRAWINGS\STEEL ALTERNATE\86SR1070007AABT2A.SHT

CONST. NO.: 86006-3235-94

PROJECT NO.	YEAR	SHEET NO.
BR-STP-107-(28)	2025	

REVISIONS

NO.	DATE	BY	BRIEF DESCRIPTION
1	05/16/2025	JS	ADDED SHEET

F.S. DENOTES: FAR SIDE
N.S. DENOTES: NEAR SIDE
P.C.O. DENOTES: PILE CUT OFF

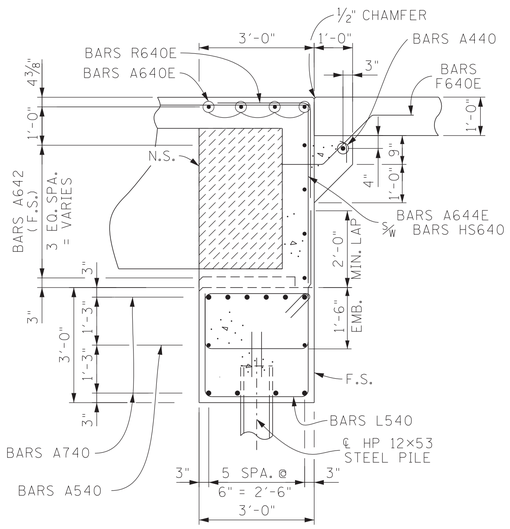

SECTION "C"-"C"
(TYP. @ GIRDERS)

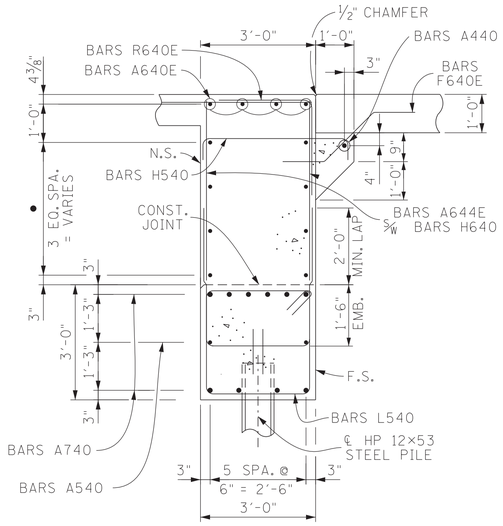

• DENOTES: BARS A640 OR A641 (N.S.)

SECTION "C"-"C"
(TYP. BETWEEN GIRDERS)

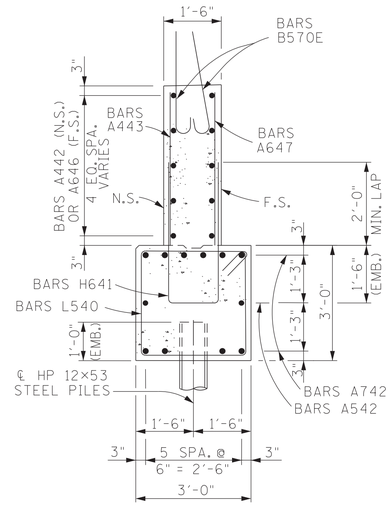

SECTION "E"-"E"

"E"

♦ DENOTES: BARS H400E - 2 SPA. @ 6" = 1'-0"
● DENOTES: SERIES BARS HA401E - 4 SPA. @ 6" = 2'-0"
▲ DENOTES: SERIES BARS HA400E - 3 SPA. @ 4¾" = 1'-2¼"

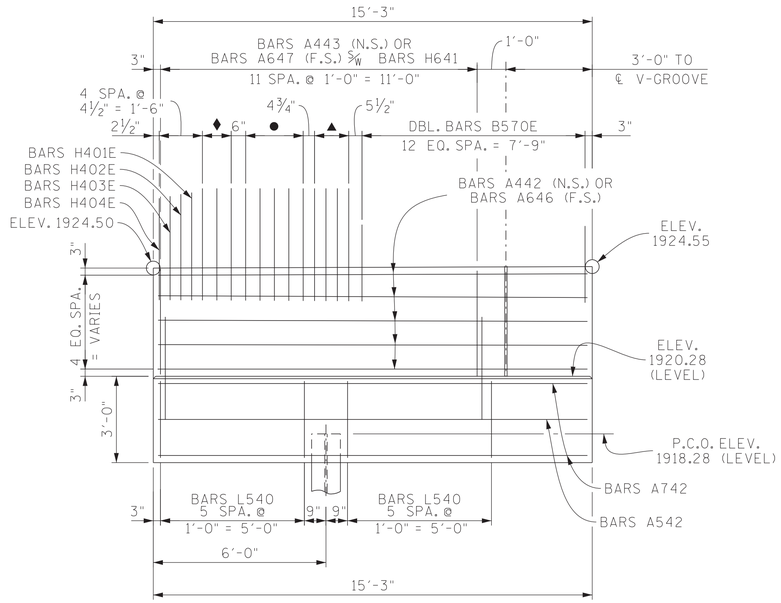

"E"

ELEVATION "A"-"A"

"E"

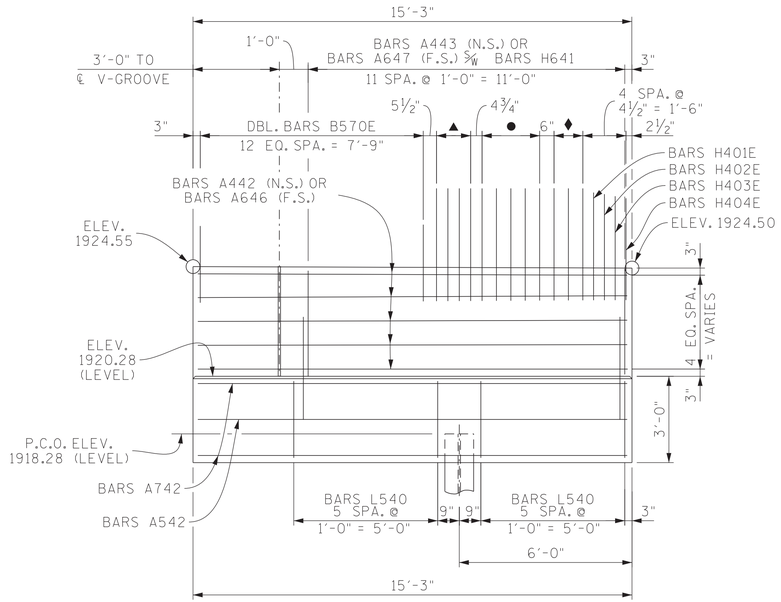

"E"

ELEVATION "B"-"B"

SEALED BY

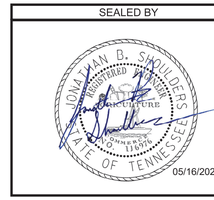

STATE OF TENNESSEE
DEPARTMENT OF TRANSPORTATION
ABUTMENT NO. 2 DETAILS
STATE ROUTE 107
(UNICOI DRIVE)
OVER NORTH INDIAN CREEK
BRIDGE ID NO. 86SR1070007
LOG MILE 5.22
STATION 210+80.00
UNICOI COUNTY
2025

U-94-897

PIN NO.: 124631.00

DESIGN BY:	J. SHOULDERS	DATE: 03/2025
DRAWN BY:	J. SHOULDERS	DATE: 04/2025
SUPERVISED BY:	AP/GWK	DATE: 04/2025
CHECKED BY:	J. SHOULDERS	DATE: 04/2025

5/16/2025 2:56:51 PM
P:\STRUCTURES\CADD_REGION_186-UNICOI\86SR1070007\CADD\BRIDGE_DRAWINGS\STEEL ALTERNATE\86SR1070007AABT2B.SHT

CONST. NO.: 86006-3235-94

PROJECT NO.	YEAR	SHEET NO.
BR-STP-107-(28)	2025	

REVISIONS

NO.	DATE	BY	BRIEF DESCRIPTION
1	05/16/2025	JS	ADDED SHEET

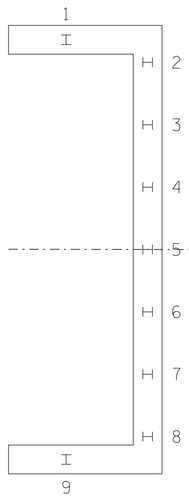

ABUTMENT NO. 1

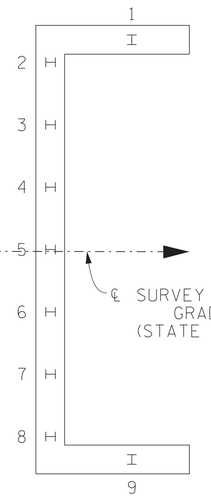

ABUTMENT NO. 2

PLAN

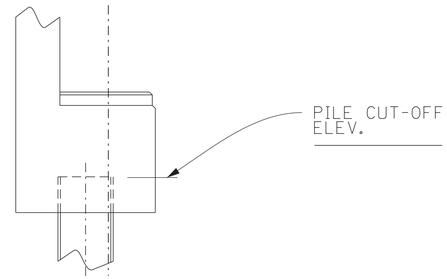

TABLE SHOWING PILE NUMBERS, PILE CUT-OFF ELEVATIONS AND LENGTHS

		1	2	3	4	5	6	7	8	9
ABUT. NO. 1	PILE CUT-OFF ELEV.									
	PILE TIP ELEV.									
	IN PLACE PILE LENGTH									
ABUT NO. 2	PILE CUT-OFF ELEV.									
	PILE TIP ELEV.									
	IN PLACE PILE LENGTH									

NOTE TO CONTRACTOR AND CONSTRUCTION OFFICE:
THE BLANKS ON THIS SHEET ARE TO BE FILLED IN BY THE CONSTRUCTION OFFICE AND/OR FIELD ENGINEER GIVING AS BUILT CONDITIONS. AFTER COMPLETION, IT IS TO BE SENT TO THE DIVISION OF STRUCTURES TO BECOME PART OF FINAL BRIDGE DOCUMENTS.

PIN NO.: 124631.00
DESIGN BY: J. SHOULDERS DATE: 03/2025
DRAWN BY: J. SHOULDERS DATE: 04/2025
SUPERVISED BY: AP/GWK DATE: 04/2025
CHECKED BY: J. SHOULDERS DATE: 04/2025

STATE OF TENNESSEE
DEPARTMENT OF TRANSPORTATION
FINAL FOUNDATION DATA
STATE ROUTE 107
(UNICOI DRIVE)
OVER NORTH INDIAN CREEK
BRIDGE ID NO. 86SR1070007
LOG MILE 5.22
STATION 210+80.00
UNICOI COUNTY
2025

U-94-898

5/16/2025 2:41:42 PM
C:\USERS\JJ05353\ONEDRIVE - TENNESSEE\DOCUMENTS\PROJECTS\UNICOI\124631.00\STEEL ALT\BRIDGE _CADD\86SR1070007AFFD.SHT

BILL OF STEEL

SUPERSTUCTURE (EPOXY)

BARS	LOCATION	SIZE	NO. REQ'D.	BENDING DIMENSIONS A	B	C	D	LENGTH (FEET)
A500E	SLAB	5	400					45'-8"
A501E	SLAB	5	94					60'-0"
A502E	SLAB	5	94					35'-8"
A503E	SLAB	5	94					30'-0"
B571E	SLAB/BRIDGERAIL	5	720	2'-8"				3'-3"

ABUTMENT NO. 1 (EPOXY)

BARS	LOCATION	SIZE	NO. REQ'D.	BENDING DIMENSIONS A	B	C	D	LENGTH (FEET)
A640E	ENDWALL	6	4					45'-8"
A644E	ENDWALL	6	79					4'-0"
B570E	W.W. / PARAPET	5	52	2'-8"				3'-3"
B640E	ENDWALL	6	2	5'-0"				5'-8"
H400E	WINGWALL/WINGPOST	4	6	10 1/2"	3'-11"			8'-9"
H401E	WINGWALL/WINGPOST	4	2	9 7/8"	3'-10"			8'-6"
H402E	WINGWALL/WINGPOST	4	2	8 3/4"	3'-9"			7'-3"
H403E	WINGWALL/WINGPOST	4	2	7 5/8"	3'-8"			8'-0"
H404E	WINGWALL/WINGPOST	4	2	6 1/2"	3'-7"			7'-9"
SERIES								
HA400E	WINGWALL/WINGPOST	4	2	*	3'-11"	9"		33'-0"
				* DIM. A VARIES FROM 5 7/8" TO 3 3/4" IN INC. OF 3/4" (4 BARS)				
SERIES								
HA401E	WINGWALL/WINGPOST	4	2	*	3'-11"	9"		44'-8"
				* DIM. A VARIES FROM 10" TO 6 1/2" IN INC. OF 5/16" (5 BARS)				
F640E	ROADWAY BRKT.	6	43	1'-1"	1'-3"	1'-1"	1'-3"	3'-11"
R640E	ENDWALL	6	43	3'-3"	3'-0"			6'- 3"

ABUTMENT NO. 2 (EPOXY)

BARS	LOCATION	SIZE	NO. REQ'D.	BENDING DIMENSIONS A	B	C	D	LENGTH (FEET)
A640E	ENDWALL	6	4					45'-8"
A644E	ENDWALL	6	79					4'-0"
B570E	W.W. / PARAPET	5	52	2'-8"				3'-3"
B640E	ENDWALL	6	2	5'-0"				5'-8"
H400E	WINGWALL/WINGPOST	4	6	10 1/2"	3'-11"			8'-9"
H401E	WINGWALL/WINGPOST	4	2	9 7/8"	3'-10"			8'-6"
H402E	WINGWALL/WINGPOST	4	2	8 3/4"	3'-9"			7'-3"
H403E	WINGWALL/WINGPOST	4	2	7 5/8"	3'-8"			8'-0"
H404E	WINGWALL/WINGPOST	4	2	6 1/2"	3'-7"			7'-9"
SERIES								
HA400E	WINGWALL/WINGPOST	4	2	*	3'-11"	9"		33'-0"
				* DIM. A VARIES FROM 5 7/8" TO 3 3/4" IN INC. OF 3/4" (4 BARS)				
SERIES								
HA401E	WINGWALL/WINGPOST	4	2	*	3'-11"	9"		44'-8"
				* DIM. A VARIES FROM 10" TO 6 1/2" IN INC. OF 5/16" (5 BARS)				
F640E	ROADWAY BRKT.	6	43	1'-1"	1'-3"	1'-1"	1'-3"	3'-11"
R640E	ENDWALL	6	43	3'-3"	3'-0"			6'- 3"

ABUTMENT NO. 1 (REGULAR)

BARS	LOCATION	SIZE	NO. REQ'D.	BENDING DIMENSIONS A	B	C	D	LENGTH (FEET)
A440	RDWY BRK	4	1					42'-8"
A442	WINGWALL	4	10					14'-11"
A443	WINGWALL	4	24					4'-1"
A540	ABUT BEAM	5	2					47'-2"
A542	WING BEAM	5	4					14'-11"
A640	ENDWALL	6	12					9'-4"
A641	ENDWALL	6	4					5'-11"
A642	ENDWALL	6	4					45'-8"
A643	ENDWALL	6	6					3'-2"
A645	WINGWALL	6	8					3'-6"
A646	WINGWALL	6	10					14'-11"
A647	WINGWALL	6	24					4'-1"
A740	ABUT. BEAM	7	10					47'-2"
A742	WING BEAM	7	20					14'-11"
B641	ENDWALL	6	8	5'-0"				5'-8"
H440	ENDWALL	4	4	2'-2"	1'-6"			5'-2"
H441	ENDWALL	4	3	3'-2"	1'-6"			6'-2"
H540	ENDWALL	5	28	2'-2"	0'-6"			3'-2"
H640	ABUT. WALLS	6	28	2'-8"	4'-0"			10'-8"
H641	WING WALLS	6	24	1'-2"	3'-7"			8'-4"
HS640	ENDWALL	6	15	2'-8"	4'-0"	1'-4"		8'-0"
L540	WING BEAM	5	68	2'-8"	2'-8"			11'-6"
VA840	FOOTING	8	14	2'-6"				5'-0"

ABUTMENT NO. 2 (REGULAR)

BARS	LOCATION	SIZE	NO. REQ'D.	BENDING DIMENSIONS A	B	C	D	LENGTH (FEET)
A440	RDWY BRK	4	1					42'-8"
A442	WINGWALL	4	10					14'-11"
A443	WINGWALL	4	24					4'-1"
A540	ABUT BEAM	5	2					47'-2"
A542	WING BEAM	5	4					14'-11"
A640	ENDWALL	6	12					9'-4"
A641	ENDWALL	6	4					5'-11"
A642	ENDWALL	6	4					45'-8"
A643	ENDWALL	6	6					3'-2"
A645	WINGWALL	6	8					3'-6"
A646	WINGWALL	6	10					14'-11"
A647	WINGWALL	6	24					4'-1"
A740	ABUT. BEAM	7	10					47'-2"
A742	WING BEAM	7	20					14'-11"
B641	ENDWALL	6	8	5'-0"				5'-8"
H440	ENDWALL	4	4	2'-2"	1'-6"			5'-2"
H441	ENDWALL	4	3	3'-2"	1'-6"			6'-2"
H540	ENDWALL	5	28	2'-2"	0'-6"			3'-2"
H640	ABUT. WALLS	6	28	2'-8"	4'-0"			10'-8"
H641	WING WALLS	6	24	1'-2"	3'-7"			8'-4"
HS640	ENDWALL	6	15	2'-8"	4'-0"	1'-4"		8'-0"
L540	WING BEAM	5	68	2'-8"	2'-8"			11'-6"
VA840	FOOTING	8	14	2'-6"				5'-0"

NOTE: BAR NUMBERS ARE REPEATED ON BILL OF STEEL FOR EACH SUBSTRUCTURE. THE SUPPLIER SHALL SHIP THE BARS TO THE JOB SITE WITH THE SUBSTRUCTURE DESIGNATION INCLUDED AS PART OF THE LABEL.

BARS A

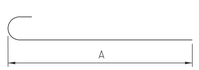

BARS B

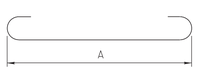

BARS D

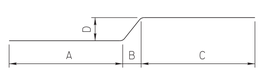

BARS F

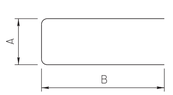

BARS H

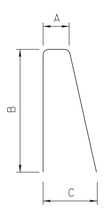

BARS HA

BARS HS

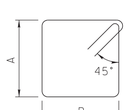

BARS L

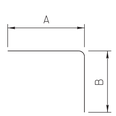

BARS R

BARS VA

PIN NO.: 124631.00
DESIGN BY: J. SHOULDERS DATE: 03/2025
DRAWN BY: J. SHOULDERS DATE: 04/2025
SUPERVISED BY: AP/GWK DATE: 04/2025
CHECKED BY: J. SHOULDERS DATE: 04/2025

5/16/2025 2:47:39 PM
C:\USERS\JJ05353\ONEDRIVE - TENNESSEE\DOCUMENTS\PROJECTS\UNICOI\124631.00\STEEL ALT\BRIDGE _CADD\86SR1070007AABT1A.SHT

CONST. NO.: 86006-3235-94

PROJECT NO.	YEAR	SHEET NO.
BR-STP-107-(28)	2025	

REVISIONS

NO.	DATE	BY	BRIEF DESCRIPTION
1	05/16/2025	JS	ADDED SHEET

REINFORCING STEEL CODE

TYPE	SIZE	SERIES
A	5	06

NOTE: DIMENSIONS SHOWN ON THIS SHEET ARE OUTSIDE TO OUTSIDE OF BAR. STANDARD C.R.S.I. HOOK DETAILS SHALL APPLY, EXCEPT AS NOTED.

NOTE: THE SUFFIX E FOR BARS SO MARKED DENOTES EPOXY COATED REINFORCEMENT.

SEALED BY

05/16/2025

STATE OF TENNESSEE
DEPARTMENT OF TRANSPORTATION
BILL OF STEEL
STATE ROUTE 107
(UNICOI DRIVE)
OVER NORTH INDIAN CREEK
BRIDGE ID NO. 86SR1070007
LOG MILE 5.22
STATION 210+80.00
UNICOI COUNTY
2025

U-94-899

FED. ROAD DIST. NO.	STATE	FED. AID PROJ. NO.	FISCAL YEAR	SHEET NO.	TOTAL SHEETS
8	TENN.		19		

NOTE: E = EXPANSION END
F = FIXED END

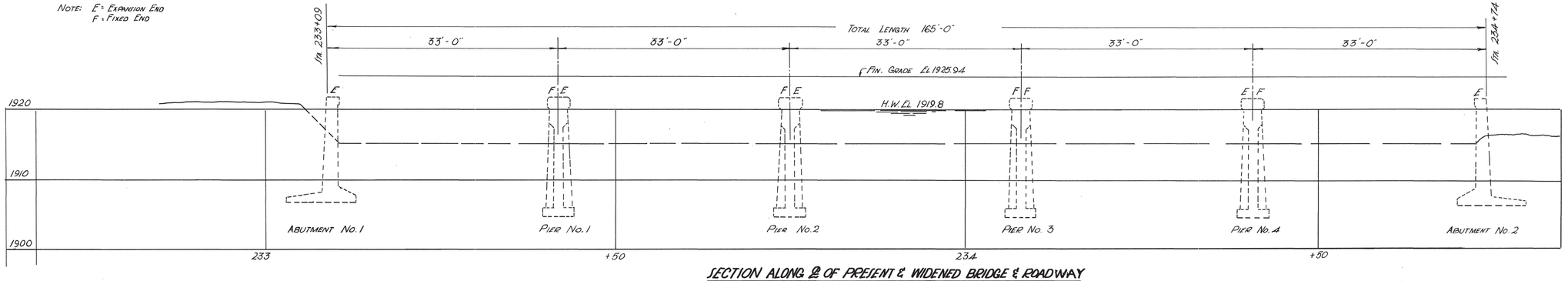

SECTION ALONG ℄ OF PRESENT & WIDENED BRIDGE & ROADWAY

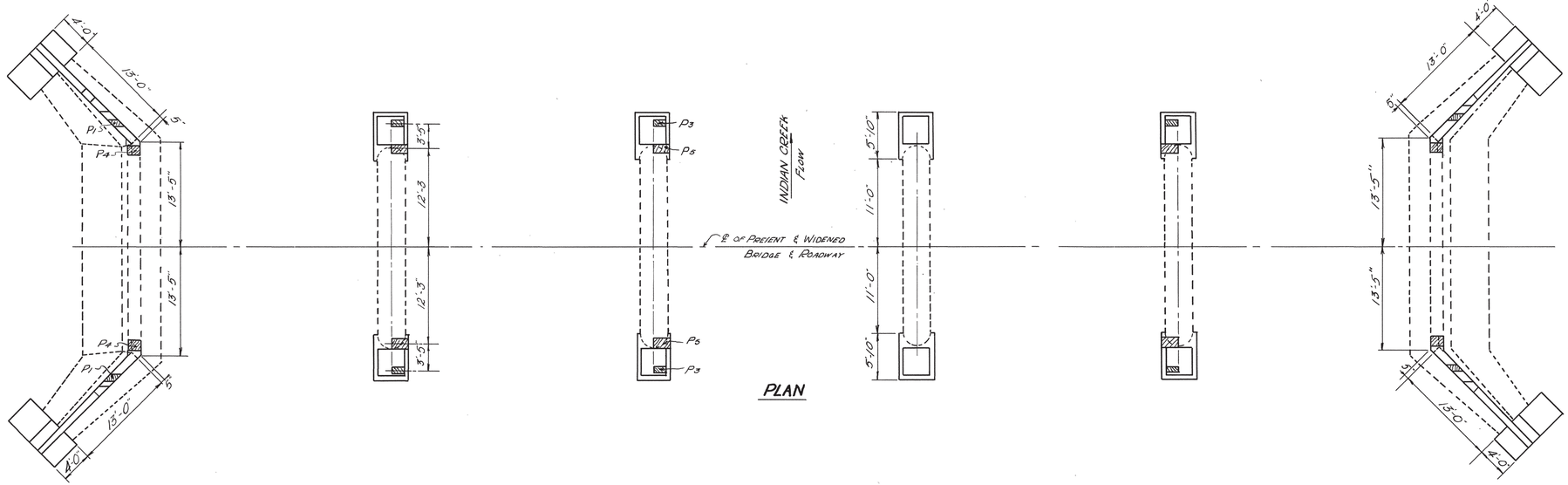

LIST OF DRAWINGS

	DWG NO.
HANDRAIL	F-7-57 & F-12-105
DECK GIRDERS	F-7-57
ABUTMENTS No. 1-2	F-7-58
PIERS	F-7-58

REQUIRED: 60 - 3"×1'-0" DRAINS

GENERAL NOTES

SPECIFICATIONS: STANDARD ROAD & BRIDGE SPECIFICATIONS OF THE TENNESSEE DEPARTMENT OF HIGHWAYS & PUBLIC WORKS.
LOADING: H20S16-44
CONCRETE TO BE CLASS "A"
REINFORCING STEEL: SEE SPECIFICATIONS
FORMS & FINISH: SEE SPECIFICATIONS
WELDING: AWS SPECIFICATIONS FOR FUSION WELDING FOR HIGHWAY & R.R. BRIDGES.

ESTIMATED QUANTITIES

ITEM	CONCRETE CLASS "A" CU. YDS.	REINFORCING STEEL LBS.	STRUCTURAL STEEL LBS.
HANDRAIL	16.3	3175	
DECK GIRDERS	136.7	19822	1539
ABUTMENT No. 1	10.5	707	
PIER No. 1	3.9	341	LUMP SUM *
PIER No. 2	3.9	341	
PIER No. 3	3.9	353	
PIER No. 4	3.9	341	
ABUTMENT No. 2	10.5	707	
TOTAL	189.6	25787	1539

* LUMPSUM: THE ESTIMATED WEIGHT OF STRUCTURAL STEEL: 6964 LBS.

NOTE: COST OF REMOVING PRESENT HANDRAIL, PARTS OF PRESENT CURBS, PARTS OF PRESENT PIERS & ABUTMENTS, COST OF ROADWAY DRAINS, FURNISHING & PLACING EXPANSION BOLTS & JOINT MATERIAL SHALL BE INCLUDED IN THE UNIT PRICE BID FOR CLASS "A" CONCRETE
NOTE: BITUMINOUS MATERIAL IS INCLUDED IN THE ROADWAY QUANTITIES
NOTE: COST OF ALL EXCAVATION SHALL BE INCLUDED IN THE ITEMS BID ON.
REQUIRED: 76 - 3/4" x 1'-6" EXPANSION BOLTS.

28'-0" ROADWAY WITH SAFETY CURBS

STATE OF TENNESSEE
DEPARTMENT OF HIGHWAYS AND PUBLIC WORKS
NASHVILLE

LAYOUT OF WIDENING

BRIDGE AT STA. 233+09
UNICOI CO.
1956

CORRECT: Fred Greer, BRIDGE ENGINEER
APPROVED: Herbert M Patton, STATE HIGHWAY ENGINEER

DESIGNED BY _____ DATE _____
DRAWN BY W. F. DATE 2-1-56
RETRACED BY G. REED DATE 6-20-56
CHECKED BY _____ DATE _____

F-7-56

FED. ROAD DIST. NO.	STATE	FED. AID PROJ. NO.	FISCAL YEAR	SHEET NO.	TOTAL SHEETS
8	TENN.		19		

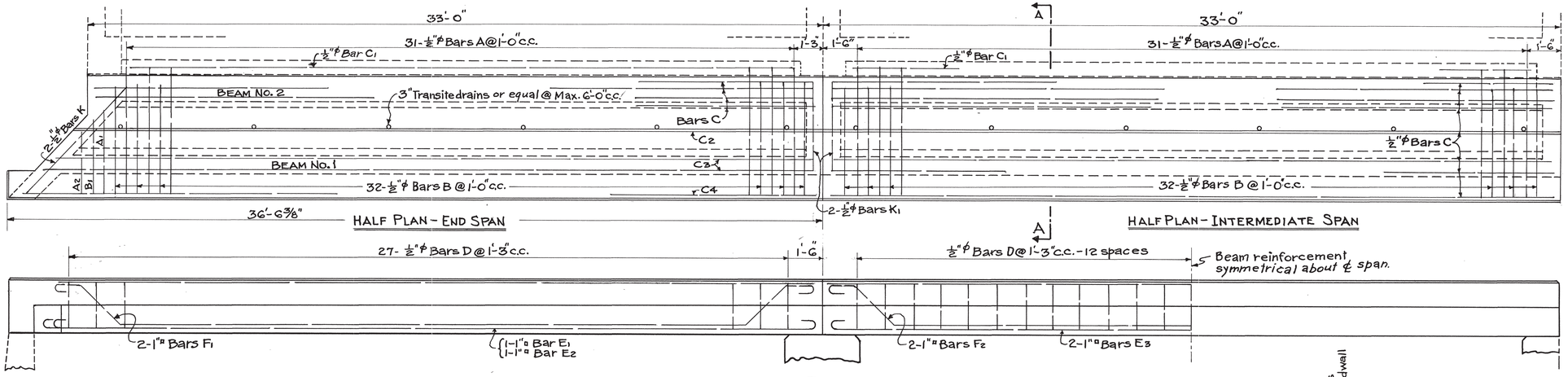

FRONT ELEVATION
Showing reinforcement in Beams No. 1

BILL OF STEEL

BAR	SIZE	END SPAN No.	END SPAN LGTH.	INTERM. SPAN No.	INTERM. SPAN LGTH.
A	½"ϕ	62	5'-9"	62	5'-9"
A1	"	2	4'-9"	–	–
A2	"	2	2'-9"	–	–
B	"	64	5'-0"	64	5'-0
B1	"	2	3'-6"	–	–
C	"	10	32'-6"	26	32'-6"
C1	"	2	30'-3"	2	30'-3"
C2	"	6	32'-9"	–	–
C3	"	6	34'-0"	–	–
C4	"	4	35'-9"	–	–
D	"	54	5'-9"	50	5'-9"
D1	½"ϕ	42	7'-5"	42	7'-5"
E1	1"□	2	35'-11"	–	–
E2	"	2	36'-3	–	–
E3	1"□	–	–	4	34'-2"
F1	1"□	4	37'-5	–	
F2	1"□	–	–	4	35'-8"
G	1½"□	6	34'-6"	6	34'-6"
H	1"ϕ	4	36'-3"	4	36'-3"
K	½"ϕ	4	6'-9"	–	–
K1	½"ϕ	4	5'-0"	8	5'-0"

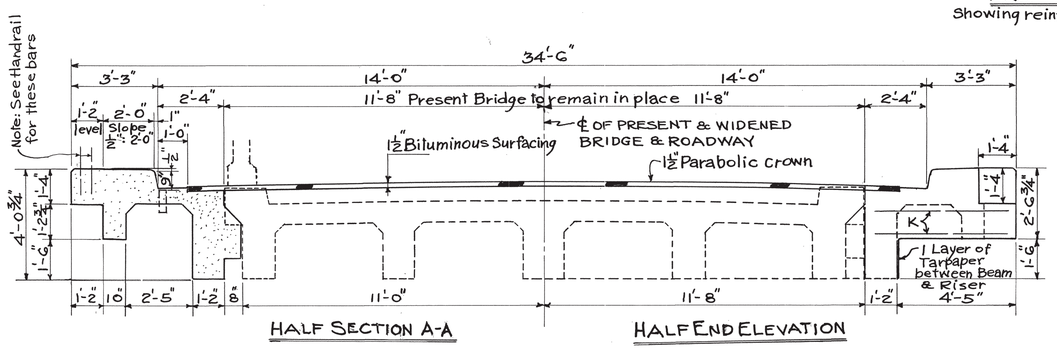

HALF SECTION A-A

HALF END ELEVATION

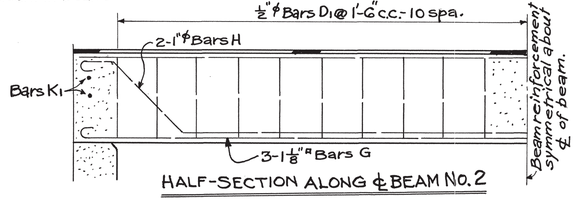

HALF-SECTION ALONG ℄ BEAM NO. 2

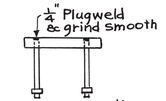

Alternate Bolt Arrangement

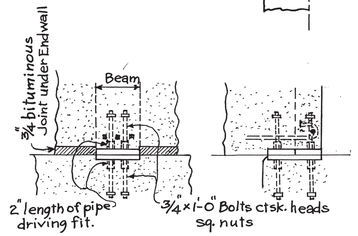

Note: Contact surfaces of plates to be coated with graphite in the Field.
All plates to be ½" thick

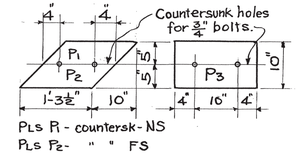

Pls P1 - countersk - NS
Pls P2 - " " FS

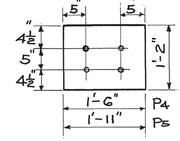

REQUIRED PLATES FOR 5 SPANS

4 Pls P1 - ABUTMENTS
4 Pls P2 - ABUTMENTS
12 Pls P3 - } PIERS & ABUTMENTS
8 Pls P4 - }
12 Pls P5 - PIERS

DETAILS OF BEARING PLATES AT EXPANSION ENDS

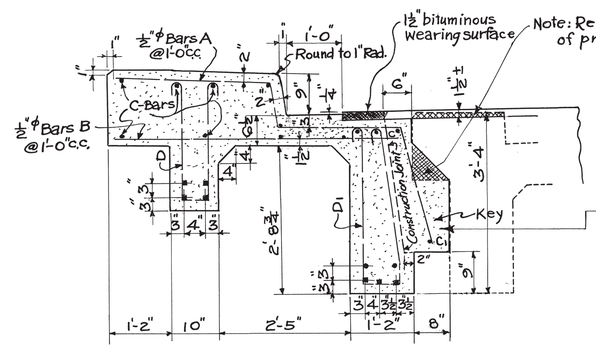

PART SECTION A-A

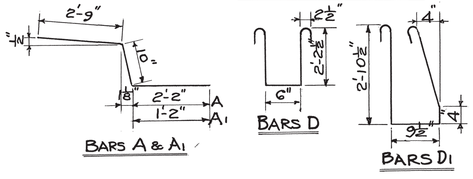

BARS A & A1

BARS D

BARS D1

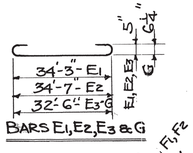

BARS E1, E2, E3 & G

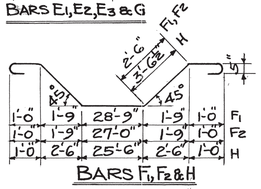

BARS F1, F2 & H

ESTIMATED QUANTITIES

ITEM	END SPAN	INTERM. SPAN
CONCRETE CLASS "A" CU.YDS.	28.0	26.9
REINFORC. STEEL LBS.	4025	3924
STRUCT. STEEL LBS.	1539	For 5 spans

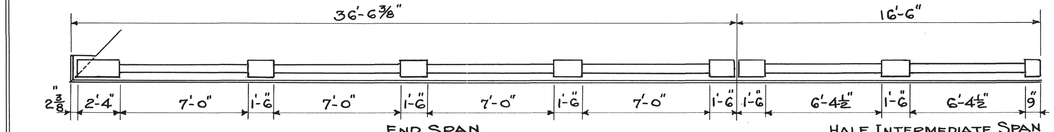

DETAILS OF RAIL

Note: For details see Dwg. E-12-105

BILL OF STEEL HANDRAIL

BAR	SIZE	END SPAN No.	END SPAN LGTH.	INTERM. SPAN No.	INTERM. SPAN LGTH.
A	⅜"ϕ	44	4'-2"	40	4'-2"
B	½"ϕ	6	6'-4"	–	–
C	⅜"ϕ	56	4'-4	56	4'-4"
D	½"ϕ	24	4'-8"	30	4'-8"
E	⅜"ϕ	56	2'-6"	56	2'-6"
F	½"ϕ	16	6'-8"	16	6'-0
G	½"ϕ	32	7'-2"	32	6'-7"

ESTIMATED QUANTITIES

5 SPANS
CONCRETE CLASS "A" 16.3 CU. YDS.
REINFORC. STEEL 3175 LBS.

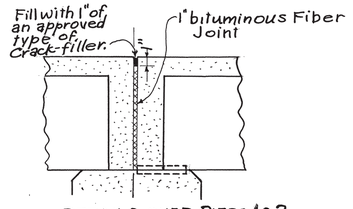

DETAILS OVER PIERS 1 & 2
Pier NO. 4 same except Joint on opposite side of ℄.

STATE OF TENNESSEE
DEPARTMENT OF HIGHWAYS AND PUBLIC WORKS
NASHVILLE

WIDENING DETAILS

BRIDGE AT STA. 233+09
UNICOI COUNTY
1956

DESIGNED BY		DATE	
DRAWN BY	W.W.	DATE	1-30-56
RETRACED BY	JWM	DATE	6-22-56
CHECKED BY		DATE	

CORRECT Fred Gass BRIDGE ENGINEER
APPROVED Herbert M. Bates STATE HIGHWAY ENGINEER

F-7-57

MICROFILMED

FED. ROAD DIST. NO.	STATE	FED. AID PROJ. NO.	FISCAL YEAR	SHEET NO.	TOTAL SHEETS
8	TENN.		19		

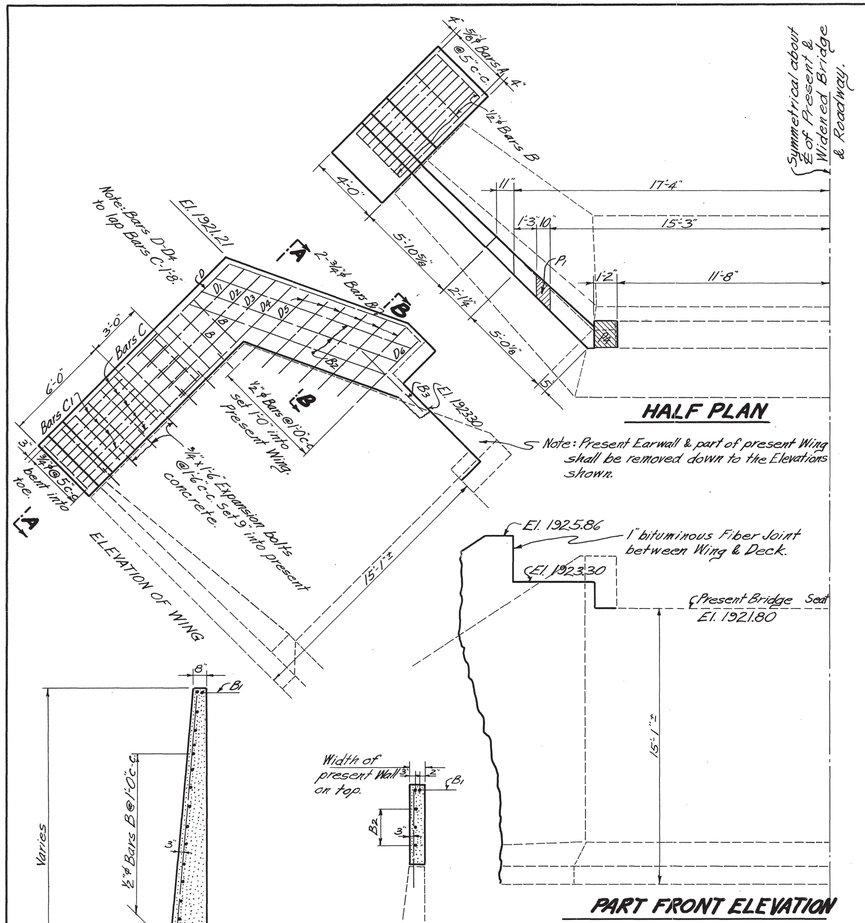

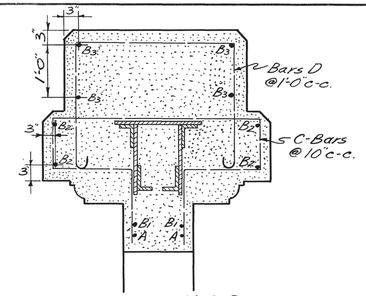

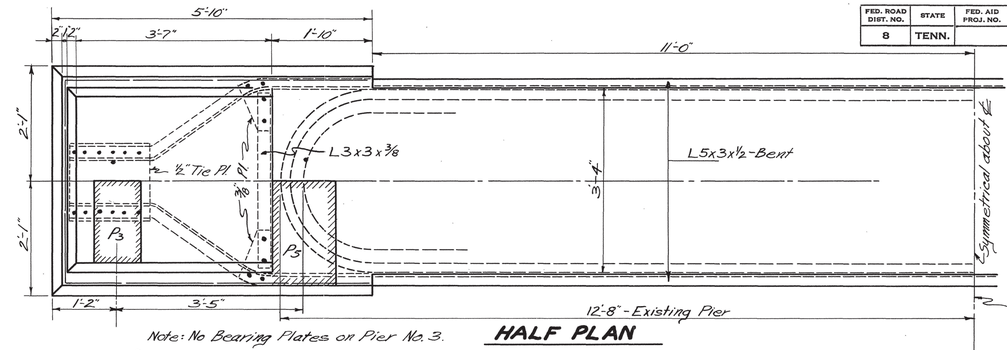

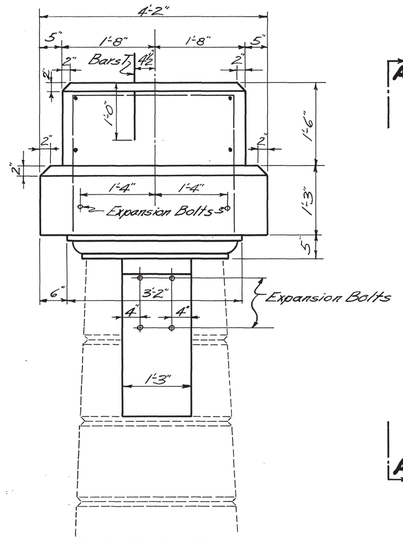

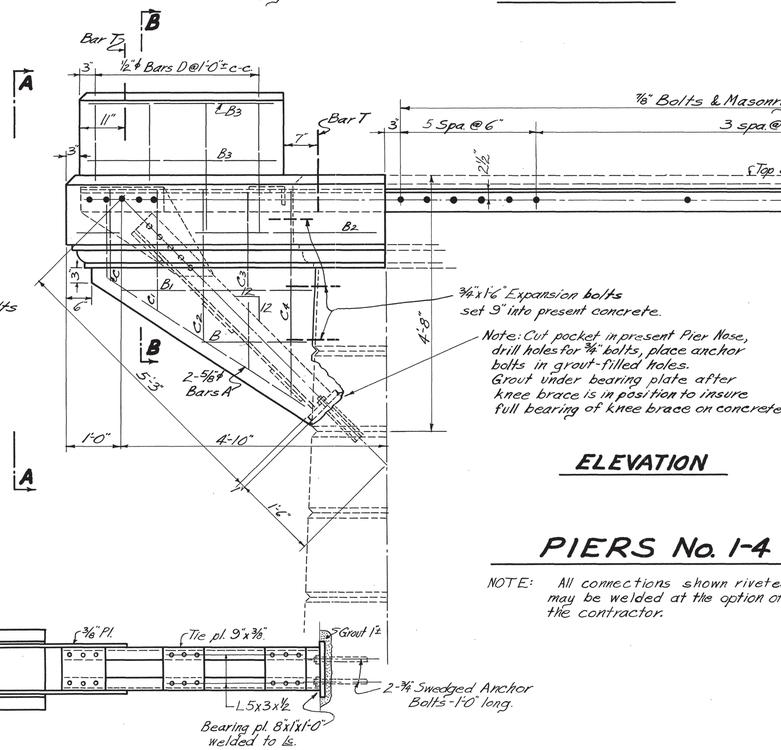

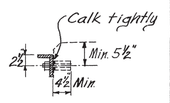

SKETCH SHOWING MASONRY ANCHOR

3 Unit Wedge type Anchors (threaded) with 7/8" x 5" Bolts spaced in 1 1/2" Dia Holes as shown.

BOTTOM VIEW of BRACE

Concrete Encasement not shown.

PIERS No. 1-4

NOTE: All connections shown riveted may be welded at the option of the contractor.

BILL of STEEL

ONE ABUTMENT

BAR	No.	SIZE	LENGTH
A	18	5/16" ϕ	6'-3"
B	30	1/2" ϕ	3'-6"
B1	4	3/4" ϕ	11'-6"
Bz	6	1/2" ϕ	11'-6"
B3	2	1/2" ϕ	5'-0"
C	10	3/4" ϕ	12'-4"
C1	8	3/4" ϕ	9'-4"
D	2	1/2" ϕ	7'-0"
D1	2	"	7'-6"
Dz	2	"	7'-9"
D3	2	"	8'-3"
D4	2	"	8'-6"
D5	12	"	5'-3"
D6	2	1/2" ϕ	4'-9"

ABUTMENTS NO. 1 & 2

Both abutments are alike.

SKETCH SHOWING LOCATION of EXPANSION BOLTS

ESTIMATED QUANTITIES

ONE ABUTMENT

CONCRETE CLASS 'A'	10.5	CU. YDS.
REINFORCING STEEL	707	LBS.

REQUIRED 14-3/4" x 1'6" EXPANSION BOLTS.

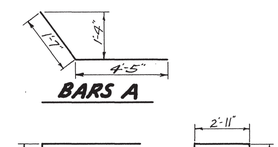

BILL of STEEL ONE PIER

BAR	No.	SIZE	LENGTH
A	4	7/8" ϕ	6'-0"
B	4	"	2'-0"
B1	4	"	3'-6"
Bz	4	5/8" ϕ	14'-8"
B3	8	1/2" ϕ	3'-5"
C	2	5/8" ϕ	9'-8"
C1	2	"	11'-2"
Cz	2	"	12'-2"
C3	2	"	13'-2"
C4	2	3/8" ϕ	14'-2"
D	8	1/2" ϕ	8'-5"
T	4	3/4" ϕ	2'-0"

Note: For Pier No. 3 add 4-Bars T.

Required Per Pier: 12-3/4" x 1'-6" Expansion Bolts.

BILL of STRUCTURAL STEEL ONE PIER *

No.	SHAPE	LENGTH	REMARK
2	ls 5x3x1/2	34'-0 (abt.)	Bent
4	ls 5x3x1/2	4'-8"	
2	ls 3x3x3/8	3'-2 1/2"	
2	Pls. 16 x 1/2	1'-6"	
4	Pls. 6 x 3/8	0'-10"	
6	Pls. 9 x 3/8	0'-9"	
2	Pls. 8 x 1"	1'-0"	
4	Pls. 18 x 3/8"	2'-3"	Bevel Cuts
4	3/4" ϕ Swedge Anchor	1'-0"	With Nuts
34	7/8 Bolts & Masonry Anchors		Wedge Type

* Expansion plates NOT included.

ESTIMATED QUANTITIES

PIER	No. 1	No. 3
CONCRETE CLASS 'A' CU.YDS.	3.9	3.9
REINFORC. STEEL LBS.	341	353
STRUCT. STEEL LBS.	1741	1741

NOTE: Piers No. 2 & 4 same as No. 1.

STATE OF TENNESSEE
DEPARTMENT OF HIGHWAYS AND PUBLIC WORKS
NASHVILLE

WIDENING DETAILS

BRIDGE AT STA. 233+09
UNICOI CO.
1956

DESIGNED BY _____ DATE _____
DRAWN BY W. Suter DATE 1-31-56
RETRACED BY Charles Walworth DATE 6-26-56
CHECKED BY _____ DATE _____

CORRECT Fred Grove, BRIDGE ENGINEER
APPROVED Herbert S. Bates, STATE HIGHWAY ENGINEER

F-7-58

MICROFILMED

FED ROAD DIST NO	STATE	FED AID PROJ NO	FISCAL YEAR	SHEET NO	TOTAL SHEETS
3	TENN		9		

M=Length of Curb to ℄ Bent

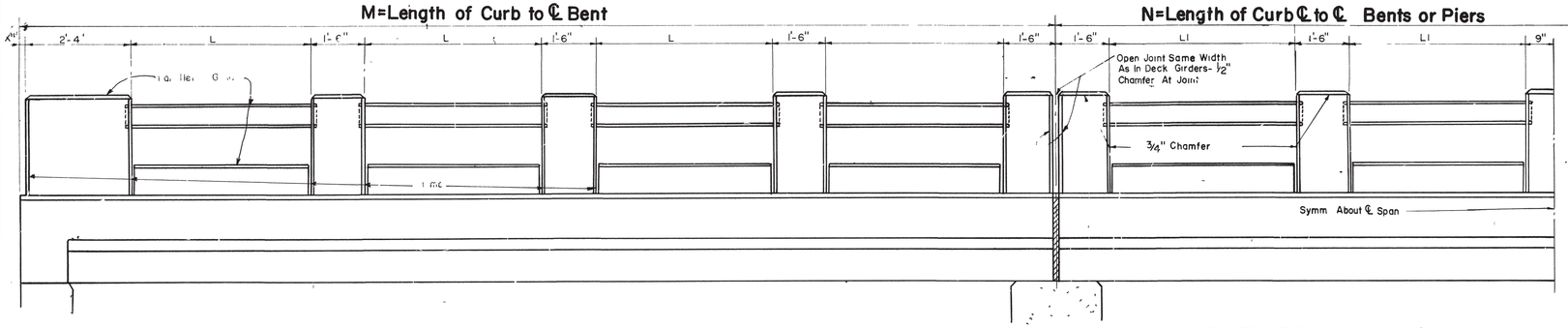

END SPAN

N=Length of Curb ℄ to ℄ Bents or Piers

INTERMEDIATE SPAN

P=Length of Curb

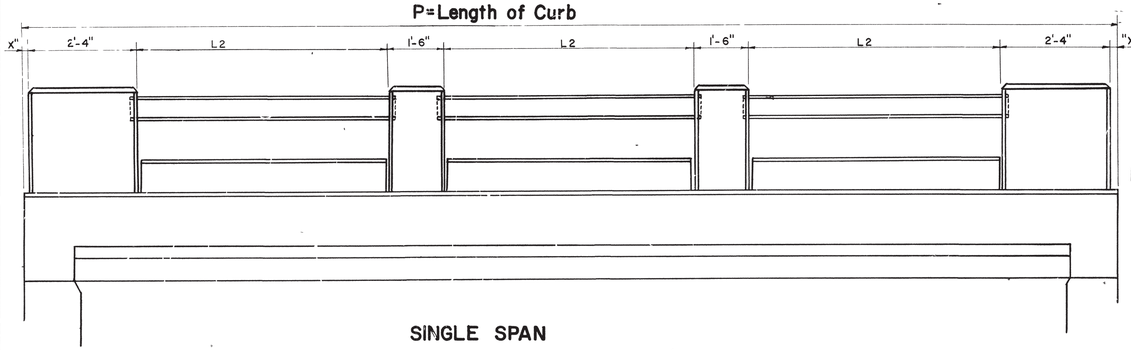

SINGLE SPAN

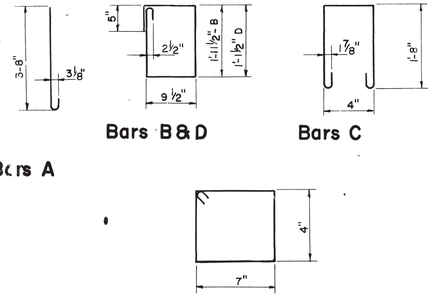

Bars A

Bars B & D

Bars C

Bars E

END SPAN

Clear Span Feet	Dimensions M	X	L	Reinforcing Steel Bars A ⅝"ø x 4'-2" NO	Bars B ½"ø x 6'-4" NO	Bars C ⅜"ø x 4'-4" NO	Bars D ½"ø x 4'-8" NO	Bars E ⅜"ø x 2'-6" NO	Bars F ½" ø NO	Bars F ½" ø Length	Bars G ½" ø NO	Bars G ½" ø Length	Quantities Concrete Class "A" Cu Yds	Quantities Reinf Steel Lbs
16	18'-6"	2"	2 @ 6'-6"	28	6	28	12	28	8	6'-2"	16	6'-8"	1.9	362
18	20'-6"	2"	3 @ 4'-6"	36	6	30	18	30	12	4'-2"	24	4'-8"	2.3	424
20	22'-6"	2"	3 @ 5'-2"	36	6	36	18	36	12	4'-10"	24	5'-4"	2.4	456
22	24'-6"	2"	3 @ 5'-10"	36	6	36	18	36	12	5'-6"	24	6'-0"	2.5	472
24	26'-6"	2"	3 @ 6'-6"	36	6	42	18	42	12	6'-2"	24	6'-8"	2.6	504
26	28'-6"	2"	4 @ 5'-0"	44	6	40	24	40	16	4'-8"	32	5'-2"	3.0	556
28	31'-0"	2"	4 @ 5'-7½"	44	6	48	24	48	16	5'-3"	32	5'-10"	3.1	597
30	33'-0"	2"	4 @ 6'-1½"	44	6	56	24	56	16	5'-9"	32	6'-4"	3.3	634
32	35'-0"	2"	4 @ 6'-7½"	44	6	56	24	56	16	6'-3"	32	6'-10"	3.4	650
34	37'-0"	2¼"	5 @ 5'-4¾"	52	6	60	30	60	20	5'-1"	40	5'-7"	3.7	718
36	39'-0"	2½"	5 @ 5'-9½"	52	6	60	30	60	20	5'-5"	40	6'-0"	3.8	734
38	41'-0"	2¾"	5 @ 6'-2¼"	52	6	70	30	70	20	5'-10"	40	6'-5"	4.0	777
40	43'-0"	2"	6 @ 5'-3"	60	6	72	36	72	24	4'-11"	48	5'-5"	4.3	838
50	53'-0"	2"	6 @ 6'-11"	60	6	84	36	84	24	6'-7"	48	7'-1"	4.9	950
60	63'-0"	2"	8 @ 6'-0¾"	76	6	96	48	96	32	5'-9"	64	6'-3"	6.0	1145

INTERMEDIATE SPAN

Clear Span Feet	Dimensions N	L1	Reinforcing Steel Bars A ⅝"ø x 4'-2" NO	Bars B ½"ø x 6'-4" NO	Bars C ⅜"ø x 4'-4" NO	Bars D ½"ø x 4'-8" NO	Bars E ⅜"ø x 2'-6" NO	Bars F ½" ø NO	Bars F ½" ø Length	Bars G ½" ø NO	Bars G ½" ø Length	Quantities Concrete Class "A" Cu Yds	Quantities Reinf Steel Lbs
16	18'-6"	2 @ 7'-0"	24	—	28	18	28	8	6'-8"	16	7'-2"	1.8	346
18	20'-6"	3 @ 4'-10"	32	—	30	24	30	12	4'-6"	24	5'-0"	2.2	408
20	22'-6"	3 @ 5'-6"	32	—	36	24	36	12	5'-2"	24	5'-8"	2.3	440
22	24'-6"	3 @ 6'-2"	32	—	42	24	42	12	5'-10"	24	6'-4"	2.4	472
24	26'-6"	3 @ 6'-10"	32	—	42	24	42	12	6'-6"	24	7'-0"	2.5	488
26	28'-6"	4 @ 5'-3"	40	—	48	30	48	16	4'-11"	32	5'-5"	2.9	561
28	31'-0"	4 @ 5'-10½"	40	—	48	30	48	16	5'-6"	32	6'-1"	3.0	581
30	33'-0"	4 @ 6'-4½"	40	—	56	30	56	16	6'-0"	32	6'-7"	3.2	618
32	35'-0"	4 @ 6'-10½"	40	—	56	30	56	16	6'-6"	32	7'-1"	3.3	634
34	37'-0"	4 @ 5'-7¼" 1 @ 5'-7"	48	—	60	36	60	20	5'-3"	40	5'-9"	3.6	701
36	39'-0"	5 @ 6'-0"	48	—	60	36	60	20	5'-8"	40	6'-2"	3.7	718
38	41'-0"	4 @ 6'-4¾" 1 @ 6'-5"	48	—	70	36	70	20	6'-1"	40	6'-7"	3.9	760
40	43'-0"	6 @ 5'-5"	56	—	72	42	72	24	5'-1"	48	5'-7"	4.2	822
50	53'-0"	6 @ 7'-1"	56	—	84	42	84	24	6'-9"	48	7'-3"	4.8	934
60	63'-0"	8 @ 6'-2¼"	72	—	96	54	96	32	5'-10"	64	6'-4"	5.9	1127

SINGLE SPAN

Clear Span Feet	Dimensions P	X	L2	Reinforcing Steel Bars A ⅝"ø x 4'-2" NO	Bars B ½"ø x 6'-4" NO	Bars C ⅜"ø x 4'-4" NO	Bars D ½"ø x 4'-8" NO	Bars E ⅜"ø x 2'-6" NO	Bars F ½" ø NO	Bars F ½" ø Length	Bars G ½" ø NO	Bars G ½" ø Length	Quantities Concrete Class "A" Cu Yds	Quantities Reinf Steel Lbs
16	18'-6"	2"	2 @ 6'-0"	32	12	24	6	24	8	5'-8"	16	6'-2"	2.0	367
18	20'-6"	2"	3 @ 4'-2"	40	12	30	12	30	12	3'-10"	24	4'-4"	2.4	440
20	22'-6"	2"	3 @ 4'-10"	40	12	30	12	30	12	4'-6"	24	5'-0"	2.5	456
22	24'-6"	2"	3 @ 5'-6"	40	12	36	12	36	12	5'-2"	24	5'-8"	2.6	488
24	26'-6"	2"	3 @ 6'-2"	40	12	42	12	42	12	5'-10"	24	6'-4"	2.7	520
26	28'-6"	2"	3 @ 6'-10"	40	12	42	12	42	12	6'-6"	24	7'-0"	2.9	536
28	31'-0"	2"	4 @ 5'-4½"	48	12	48	18	48	16	5'-0"	32	5'-7"	3.2	613
30	33'-0"	2"	4 @ 5'-10½"	48	12	48	18	48	16	5'-6"	32	6'-1"	3.4	629
32	35'-0"	2"	4 @ 6'-4½"	48	12	56	18	56	16	6'-0"	32	6'-7"	3.5	666
34	37'-0"	2"	4 @ 6'-10½"	48	12	56	18	56	16	6'-6"	32	7'-1"	3.6	682
36	39'-0"	2½"	5 @ 5'-7"	56	12	60	24	60	20	5'-3"	40	5'-9"	4.0	719
38	41'-0"	2"	5 @ 6'-0"	56	12	60	24	60	20	5'-8"	40	6'-2"	4.1	766
40	43'-0"	2"	6 @ 5'-1"	64	12	60	30	60	24	4'-9"	48	5'-3"	4.4	823
50	53'-0"	2"	6 @ 6'-9"	64	12	84	30	84	24	6'-5"	48	6'-11"	5.0	966
60	63'-0"	2"	8 @ 5'-11¼"	80	12	96	42	96	32	5'-7"	64	6'-1"	6.1	1158

GENERAL NOTES:

Specifications Standard Road & Bridge Specifications of the Tennessee Department of Highways
Concrete To be Class "A"
Reinforcing Steel See Specification
Forms & Finish See Specifications

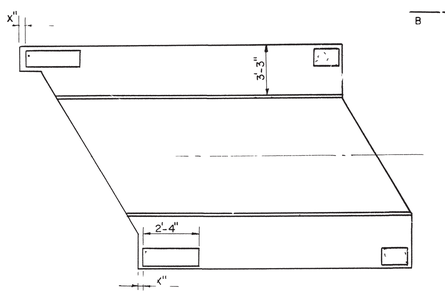

END POST on SKEWED DECK GIRDER

With Safety Curbs

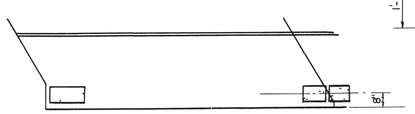

DECK GIRDER with SIDEWALK

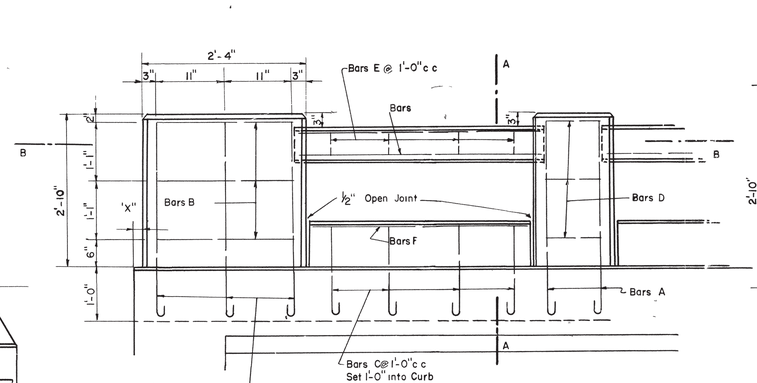

NOTE: When Curb Thickness is Shown 7", Bend Bars A & C into Curb

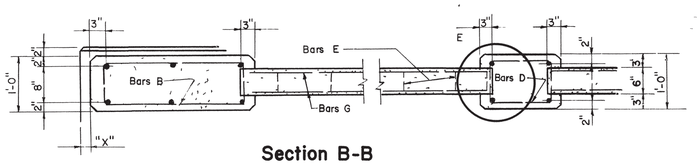

Section B-B

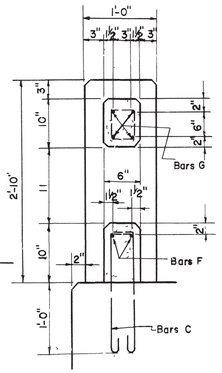

Section A-A

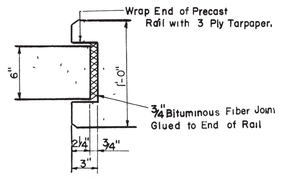

Detail At "E"

NOTE: Chamfer all Handrail Edges ½" Except as Shown at Split Rail Post

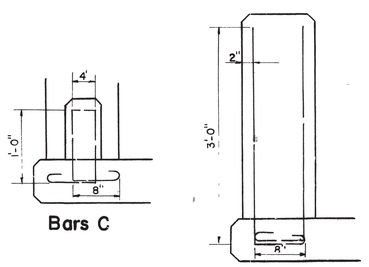

Bars C

Bars A

BAR DETAIL for "7" CURB

STATE OF TENNESSEE
DEPARTMENT OF HIGHWAYS
NASHVILLE

STANDARD CONCRETE HANDRAIL RAIL TYPE 1953

CORRECT — Fred Groves, BRIDGE ENGINEER
APPROVED — Cecil D Long, STATE HIGHWAY ENGINEER

E-12-105

DESIGNED BY — DATE —
DRAWN BY W W DATE 5-10-49
RETRACED BY Kelley & Skaggs DATE 3-7-62
CHECKED BY — DATE —

4 Revised 7-20-62.
3 Revised 3-27-61 Bend Details For Bars A & C
2 Revised for Chamfer 8-27-59
1 Rev for Removal of Grove in Rail Post
Revised 10-8-56

FED ROAD DIST NO	STATE	FED AID PROJ NO	FISCAL YEAR	SHEET NO	TOTAL SHEETS
8	TENN.		19		

SA310-C

Note: E = Expansion end
F = Fixed end

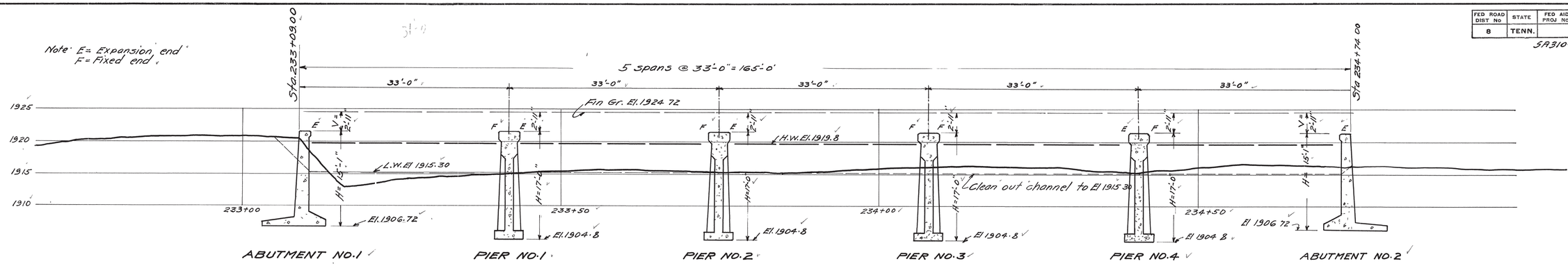

SECTION ON ℄ OF BRIDGE & ROADWAY

NOTE:
For detail of Handrail see Drawing D-4-95, Standard Concrete Handrail
For detail of Girders see Drawing D-4-76, Standard Concrete Deck Girders, 5 Spans @ 30'-0". Omit brackets.
Surfacing to be 2" of 1:2:4 concrete poured monolithic with girder slab
For detail of Abutments No 1 & No 2 see Drawing D-4-174, Standard Concrete Abutment, Total Height 18'-0", V = 2'-11", H = 15'-1", L = 4'-6", Roadway 20'-0".
For detail of Piers No.1 to No.4 see Drawing D-4-159, Standard Concrete Piers, Total Height 17'-0" Table No.4, Roadway 20'-0".

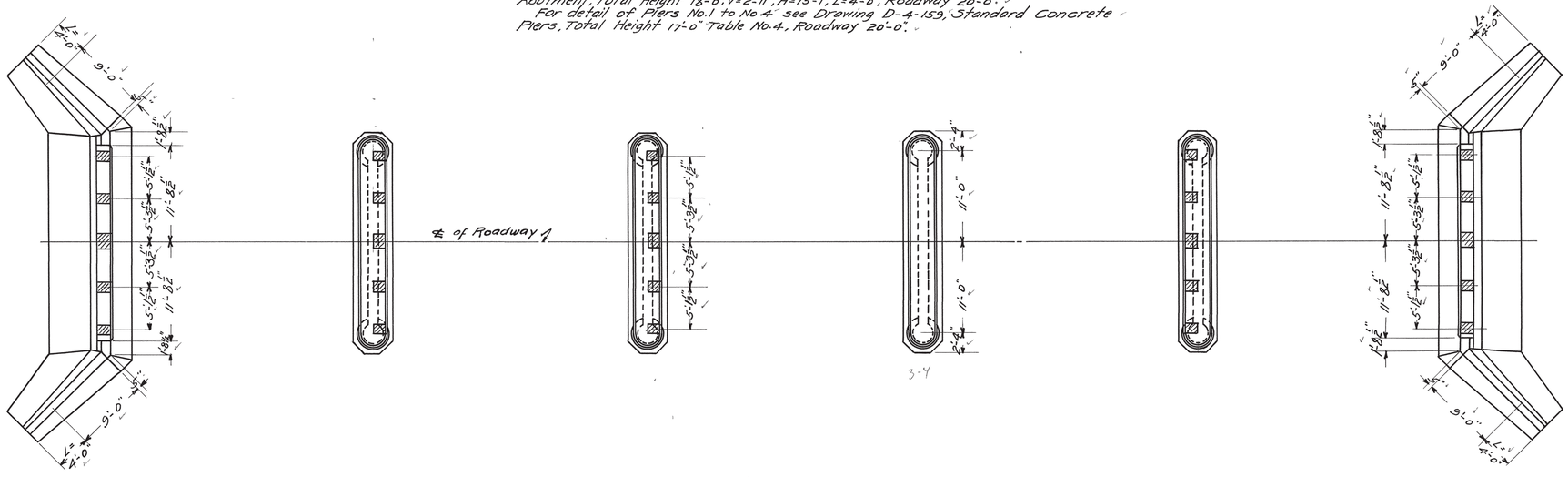

General Notes

Specifications: Standard Bridge Specifications of the Tennessee Department of Highways.
Forms & Finish: See Specifications
The Road Contractor shall do all clearing and grubbing for the full width of right-of-way between the beginning and end of this bridge before any bridge work is commenced

ESTIMATED QUANTITIES

ITEM	EXCAVATION CU YDS. DRY	EXCAVATION CU YDS. WET	CONCRETE CU YDS 1:2.3	CONCRETE CU YDS 1:2:4	CONCRETE CU YDS 1:2½:5	STEEL LBS. REINF.	STEEL LBS. STRUCT
SUPERSTRUCTURE	—	—	22.62	209.28	—	43995	2235
ABUTMENT NO.1	95	194	—	62.24	—	3939	—
PIER NO.1	—	89	—	—	33.186	1828	—
" NO.2	—	89	—	—	33.186	1828	—
" NO.3	—	89	—	—	33.186	1828	—
" NO.4	—	89	—	—	33.186	1828	—
ABUTMENT NO.2	25	194	—	62.24	—	3939	—
TOTALS	120	744	22.62	333.76	132.74	59185	2235

Channel excavation to be made by Road Contractor.

STATE OF TENNESSEE
DEPARTMENT OF HIGHWAYS AND PUBLIC WORKS
NASHVILLE

LAYOUT OF BRIDGE

AT
STA 233+09.00
UNICOI CO
1926

DESIGNED BY
DRAWN BY
TRACED BY
CHECKED BY J. Schneider

DATE 11-15-26
DATE
DATE 11-18-26
DATE 11-16-26

CORRECT L. M. Erickson BRIDGE ENGINEER
APPROVED R. H. Baker ASSISTANT STATE HIGHWAY ENGINEER

D-6-7

FED ROAD DIST NO	STATE	FED. AID PROJ NO	FISCAL YEAR	SHEET NO	TOTAL SHEETS
8	TENN		19		

DETAIL OF GUTTER FOR BITUMINOUS SURFACE

DETAIL OF ROADWAY TEMPLATE FOR GIRDERS

DETAIL OF COPING AND ROADWAY DRAIN For Concrete Wearing Surface

HALF SECTION A-A

HALF END ELEVATION

Curb bar type to be approved by Bridge Engineer.

DETAILS AT EXPANSION

NOTE: 16 gage copper Pl's (Same size as steel Pl's) shall be used between top & bottom expansion plates. Cost of copper plates shall be included in the price per pound for structural steel.

Pl. 14"x½"x1'-6" 8 REQUIRED Exterior & Interior Beams

Pl. 18"x½"x1'-6" 2 REQUIRED Middle Beam

Chamfer corners of bottoms of all beams ½" as shown.

NOTE: These projections are at the abutment ends only.

ABUTMENT

SIDE ELEVATION

PIER

Block 8"x1'-10"x(X-1'-3") cast with girder

NOTE: Edge of this block to be flush with face of Abutment Wingwall.

HALF SECTION B-B

HALF SECTION C-C

QUARTER PLAN

QUARTER PLAN SHOWING SLAB REINFORCEMENT

The curb bar shall be carried around and across the end of the curb (At each end of the structure only on a multiple Span bridge.)

4" Drains not over 6'-0" c.c.

End of curb over piers

When two or more spans are built place ¾" bituminous felt joint between spans at expansion ends.

NOTE: In finishing the concrete wearing surface the float shall be operated from bridges resting on the outside curb forms. The surface shall not vary more than ¼" in 10 ft. when tested with a 10 ft. straight edge applied longitudinally and lapped one half its length as testing proceeds. The testing shall be done after the water has disappeared from the surface and before initial set takes place.

BENDING DIAGRAM BAR A

BENDING DIAGRAM BARS B & D

BENDING DIAGRAM BARS E, F & G

BENDING DIAGRAM BARS M, N1 & N2

DETAIL OF CURBS FOR SKEWED GIRDERS

NOTE: The top of the driveway slab shall always be struck to a template and when the wearing surface is concrete such surface shall be poured of class "A" mixture integral with the supporting slab and to the thickness indicated in addition to being struck to a template. This surface shall be finished with a long handle float so that it will be free from open or rough places, depressions or projections.

Line and grade of top of curb shall be checked immediately after the pouring of the curb has been completed and any irregularities adjusted at once.

Before the concrete has received its permanent set, the top of the curb shall be struck to a true plane and all excess material removed. The curb adjacent to bevels shall be carefully troweled so as to secure true lines and sharp edges.

When pouring curb, provision shall be made for handrail.

DIMENSIONS AND QUANTITIES FOR INTERMEDIATE SPANS ONLY

CLEAR SPAN FEET	TOTAL LENGTH	DIMENSIONS X	Y	Y1	Z1	Z	STIRRUP SPACING Exterior Beam Stirrups M	Interior Beam Stirrups N1	Middle Beam Stirrups N2	QUANTITIES Concrete Cu.Yds.	Reinf. Steel Lbs.	Struct. Steel Lbs.
28	31'-0"	3'-1"	1'-9⅛"	1'-10¼"	1'-10⅝"	1'-11"	6 Spa. @ 12" 12 " @ 18" 6 " @ 12"	8 Spa. @ 9" 18 " @ 12" 8 " @ 9"	20 Spa. @ 6" 10 " @ 12" 20 " @ 6"	33.99	7799	442
30	33'-0"	3'-4"	2'-0⅛"	2'-1¼"	2'-1⅝"	2'-2"	6 " @ 12" 13 " @ 18" 6 " @ 12"	8 " @ 9" 20 " @ 12" 8 " @ 6"	20 " @ 6" 12 " @ 12" 20 " @ 6"	38.19	8352	442
32	35'-0"	3'-7"	2'-3⅛"	2'-4¼"	2'-4⅝"	2'-5"	6 " @ 12" 14 " @ 18" 6 " @ 12"	8 " @ 9" 22 " @ 12" 8 " @ 9"	20 " @ 6" 14 " @ 12" 20 " @ 6"	42.64	8913	442
34	37'-0"	3'-7"	2'-3⅛"	2'-4¼"	2'-4⅝"	2'-5"	10 " @ 12" 9 " @ 21" 10 " @ 12"	14 " @ 9" 16 " @ 12" 14 " @ 9"	20 " @ 6" 16 " @ 12" 20 " @ 6"	44.94	10603	442
36	39'-0"	3'-10"	2'-6⅛"	2'-7¼"	2'-7⅝"	2'-8"	10 " @ 12" 10 " @ 21" 10 " @ 12"	14 " @ 9" 12 " @ 16" 14 " @ 9"	20 " @ 6" 18 " @ 12" 20 " @ 6"	49.71	11226	442
38	41'-0"	4'-1"	2'-9⅛"	2'-10¼"	2'-10⅝"	2'-11"	11 " @ 12" 10 " @ 21" 11 " @ 12"	14 " @ 9" 14 " @ 16" 14 " @ 9"	21 " @ 6" 19 " @ 12" 21 " @ 6"	54.74	11892	442
40	43'-0"	4'-4"	3'-0⅛"	3'-1¼"	3'-1⅝"	3'-2"	11 " @ 12" 11 " @ 21" 11 " @ 12"	15 " @ 9" 14 " @ 16" 15 " @ 9"	22 " @ 6" 20 " @ 12" 22 " @ 6"	59.98	12550	442

NOTE: Cost of C.I. Drains, curb bar and of all bituminous felt joints shall be included in the price per cu.yd. of Class "A" concrete. Cost of copper plates shall be included in the price per pound of structural steel.

ADDITIONAL ESTIMATED QUANTITIES REQUIRED AT EACH ABUTMENT

CLEAR SPAN	Curb Projection and Additional in Blocks: Concrete Cu.Yds.	Steel Lbs.
28'-0"	.325	21
30'-0"	.335	21
32'-0"	.340	21
34'-0"	.340	21
36'-0"	.345	21
38'-0"	.350	21
40'-0"	.360	21

ESTIMATED QUANTITIES FOR ONE BRACKET AT END OF BRIDGE.

CLEAR SPAN	Concrete Cu. Yds.	Reinf. Steel Lbs.
28'-0"	1.15	63
30'-0"	1.26	63
32'-0"	1.37	63
34'-0"	1.37	63
36'-0"	1.48	63
38'-0"	1.59	63
40'-0"	1.69	63

BILL OF STEEL

CLEAR SPAN Feet	Bars A-½"□ Slab Reinf. No.	Length	Bars B-½"□ Slab Reinf. No.	Length	Bars C-½"□ Spacing Bar No.	Length	Bars D Reinf. all Beams No.	Size	Length	Bars E Exterior Beam Reinf. No.	Size	Length	Bars F Interior & Middle Beam Reinf. No.	Size	Length	Bars G Interior & Middle Beam Reinf. No.	Size	Length
28	31	24'-4"	60	23'-8"	26	30'-6"	16	1⅜"□	32'-4"	4	1⅜"□	33'-2"	6	1⅜"□	33'-2"	4	1⅜"□	33'-2"
30	33	24'-4"	64	23'-8"	26	32'-6"	16	1⅜"□	34'-4"	4	1⅜"□	35'-4"	6	1⅜"□	35'-4"	4	1⅜"□	35'-4"
32	35	24'-4"	68	23'-8"	26	34'-6"	16	1⅜"□	36'-4"	4	1⅜"□	37'-5"	6	1⅜"□	37'-6"	4	1⅜"□	37'-6"
34	37	24'-4"	72	23'-8"	26	36'-6"	16	1¼"□	38'-6"	4	1¼"□	39'-8"	6	1¼"□	39'-7"	4	1¼"□	39'-7"
36	39	24'-4"	76	23'-8"	26	38'-6"	16	1¼"□	40'-6"	4	1¼"□	41'-8"	6	1¼"□	41'-10"	4	1¼"□	41'-10"
38	41	24'-4"	80	23'-8"	26	40'-6"	16	1½"□	42'-6"	4	1½"□	43'-10"	6	1½"□	44'-0"	4	1½"□	44'-0"
40	43	24'-4"	84	23'-8"	26	42'-6"	16	1¾"□	44'-6"	4	1¾"□	45'-11"	6	1¾"□	46'-2"	4	1¾"□	46'-2"

CLEAR SPAN Feet	Bars M-½"□ Stirrups Exterior Beam No.	Length	Bars N1-½"□ Stirrups Interior Beam No.	Length	Bars N2-½"□ Stirrups Middle Beam No.	Length	Bars P-½" Backwall No.	Length
28	50	7'-2"	70	5'-11"	51	6'-5"	6	23'-0"
30	52	7'-8"	74	6'-5"	53	6'-11"	6	23'-0"
32	54	8'-2"	78	6'-11"	55	7'-5"	6	23'-0"
34	60	8'-2"	80	6'-11"	57	7'-5"	6	23'-0"
36	62	8'-8"	82	7'-5"	59	7'-11"	6	23'-0"
38	66	9'-2"	86	7'-11"	62	8'-5"	6	23'-0"
40	68	9'-8"	90	8'-5"	65	8'-11"	6	23'-0"

NOTE: Add 12 bars S-(½"□x 4'-0") for each bridge.

STEEL BENDING TABLE

Clear Span Feet	Bars D f	Bars E a	b	c	d	e	Bars F a	b	c	d	e	Bars G a	b	c	d	e	Bars M h	Bars N1 h	Bars N2 h
28	30'-6"	1'-3"	6'-6"	15'-0"	2'-4"	6'-11"	1'-3"	3'-3"	21'-6"	1'-8"	3'-8"	4'-6"	3'-3"	15'-0"	1'-8"	3'-8"	2'-9"	2'-1½"	2'-2½"
30	32'-6"	1'-3"	7'-0"	16'-0"	2'-7"	7'-5½"	1'-3"	3'-6"	23'-0"	1'-11"	4'-0"	4'-9"	3'-6"	16'-0"	1'-11"	4'-0"	3'-0"	2'-4½"	2'-5½"
32	34'-6"	1'-3"	7'-6"	17'-0"	2'-10"	8'-0"	1'-3"	3'-9"	24'-6"	2'-2"	4'-4"	5'-0"	3'-9"	17'-0"	2'-2"	4'-4"	3'-3"	2'-7½"	2'-8½"
34	36'-6"	1'-3"	8'-0"	18'-0"	2'-10"	8'-5½"	1'-3"	4'-0"	26'-0"	2'-2"	4'-6"	5'-3"	4'-0"	18'-0"	2'-2"	4'-6"	3'-3"	2'-7½"	2'-8½"
36	38'-6"	1'-3"	8'-6"	19'-0"	3'-1"	9'-0"	1'-3"	4'-3"	27'-6"	2'-5"	4'-10½"	5'-6"	4'-3"	19'-0"	2'-5"	4'-10½"	3'-6"	2'-10½"	2'-11½"
38	40'-6"	1'-3"	9'-0"	20'-0"	3'-4"	9'-7½"	1'-3"	4'-6"	29'-0"	2'-8"	5'-2¾"	5'-9"	4'-6"	20'-0"	2'-8"	5'-2¾"	3'-9"	3'-1½"	3'-2½"
40	42'-6"	1'-3"	9'-6"	21'-0"	3'-7"	10'-1¾"	1'-3"	4'-9"	30'-6"	2'-11"	5'-7"	6'-0"	4'-9"	21'-0"	2'-11"	5'-7"	4'-0"	3'-4½"	3'-5½"

GENERAL NOTES

Specifications: Standard Road and Bridge Specifications of the Tennessee Department of Highways & Public Works.

Concrete shall be Class "A" with class "A" aggregate.

Curbs slabs and beam stems must be poured at same time allowing no time for initial set to take place between them.

Reinforcing steel shall be deformed bars of Structural steel or intermediate grade made by the O.H. process.

All dimensions relating to reinforcement are to centers of bars.

Where splicing of reinforcement is necessary all bars are to be lapped 40 diameters.

Forms: See Specifications.

Finish: See Specifications.

SECT. E-E

SECT. B-B

SECTION A-A

TOP VIEW

DETAIL OF 4" CAST IRON DRAIN PIPE

STATE OF TENNESSEE
DEPARTMENT OF HIGHWAYS AND PUBLIC WORKS
NASHVILLE

STANDARD

CONCRETE DECK GIRDER BRIDGES

SPANS 28' TO 40" ROADWAY 20'-0"

1927

CORRECT Fred Green BRIDGE ENGINEER

APPROVED Herbert S. McFarland STATE HIGHWAY ENGINEER

D-4-76

DESIGNED BY _____ DATE _____
DRAWN BY A.R.JESSUP DATE 9-30-25
RETRACED BY C/C DATE 12-17-58
CHECKED BY _____ DATE _____

Revised 11-5-27 concrete 1:2:4 changed to Class "A"
Tracing of MHWS 12-12-58

TRACING NOT MICROFILMED

FED ROAD DIST NO	STATE	FED AID PROJ NO.	FISCAL YEAR	SHEET NO	TOTAL SHEETS
8	TENN.		19		

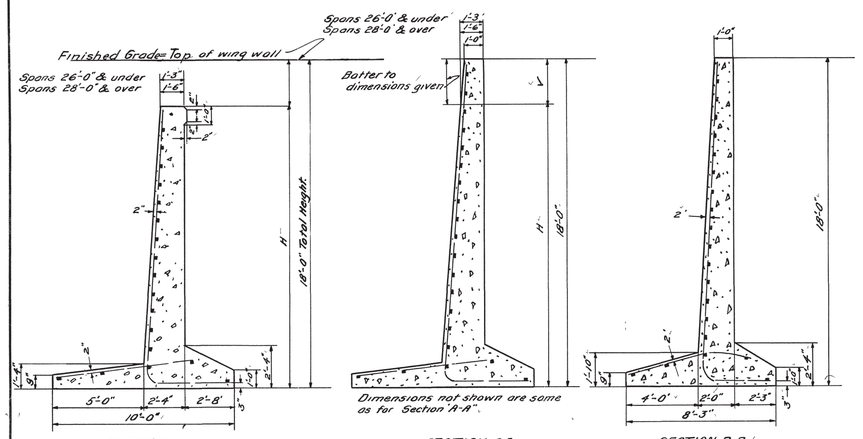

SECTION A-A SECTION C-C SECTION B-B

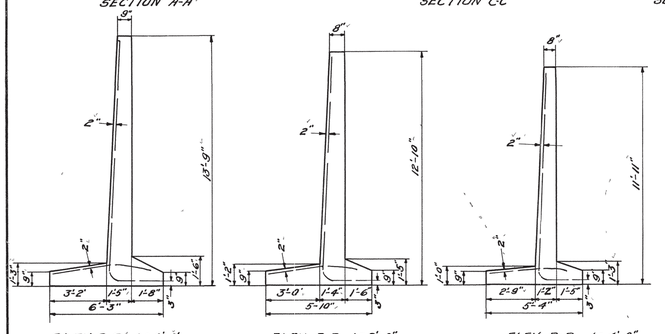

ELEV D-D L=0'-0" ELEV D-D L=2'-0" ELEV D-D L=4'-0"

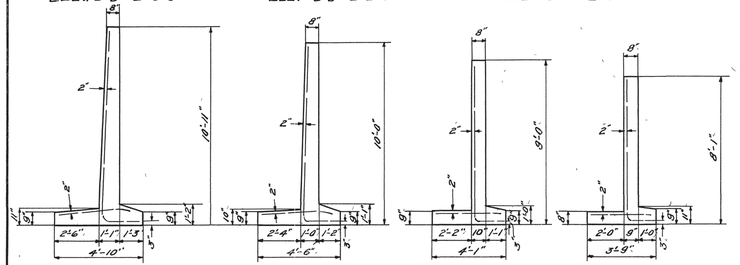

ELEV D-D L=6'-0" ELEV D-D L=8'-0" ELEV D-D L=10'-0" ELEV D-D L=12'-0"

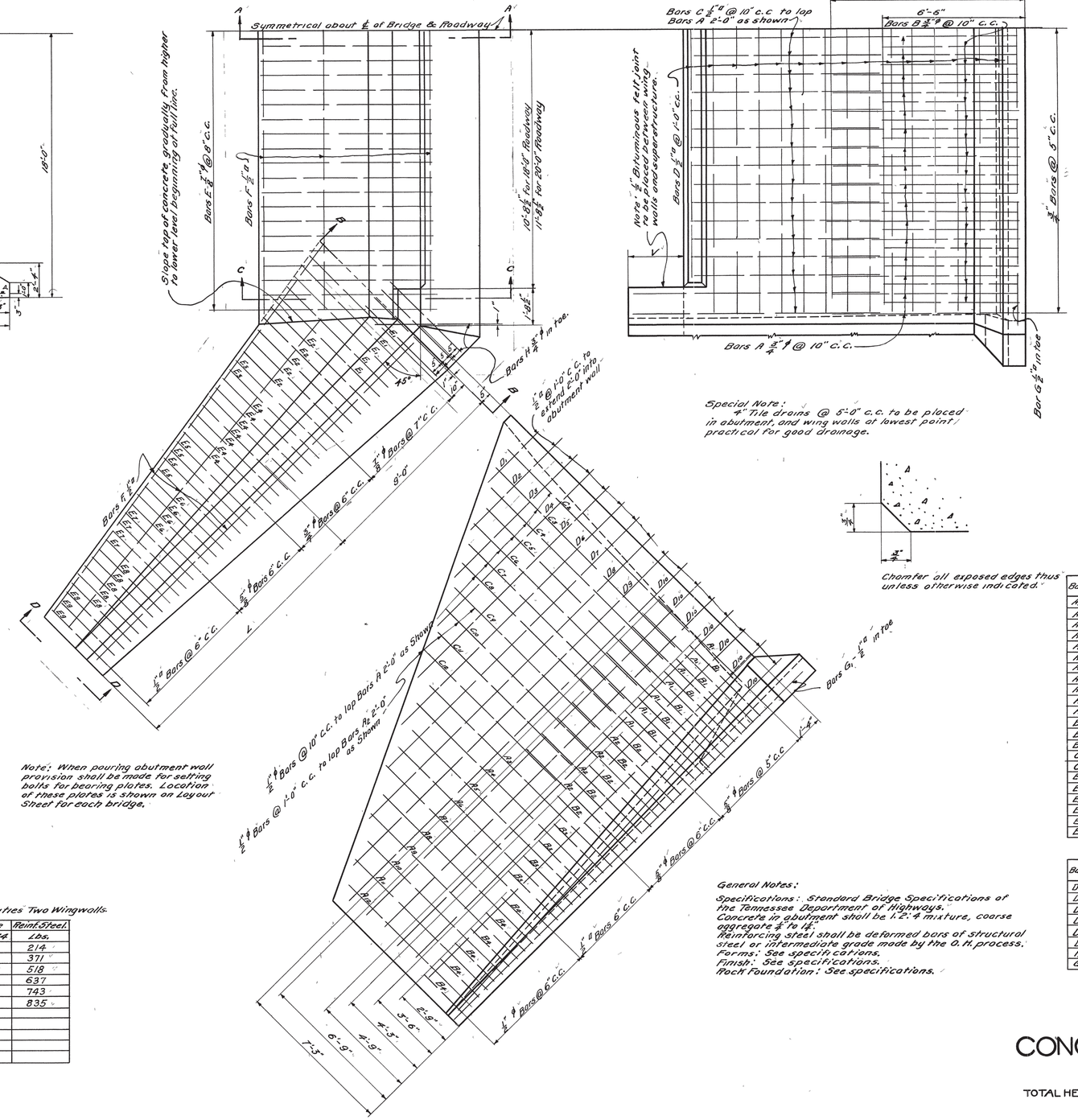

Note: When pouring abutment wall provision shall be made for setting bolts for bearing plates. Location of these plates is shown on Layout Sheet for each bridge.

Special Note:
4" Tile drains @ 5'-0" c.c. to be placed in abutment, and wing walls at lowest point practical for good drainage.

Chamfer all exposed edges thus unless otherwise indicated.

* See additional bill of steel - Both Roadways for 18'-0" Roadway deduct 2 Bars A, 2 Bars B, 2 Bars C, 3 Bars E, and 2'-0" from each Bar D, F, & G.

Bill of Steel for 20'-0" Roadway

This bill constant for all lengths of wingwalls. For additional Bars see Bill of Steel for Wingwalls.

Bar	Size	No.	Length
A	3/4" ϕ	32	13'-0"
A1	3/4" ϕ	14	10'-0"
B	3/4" ϕ	31	10'-9"
B1	3/4" ϕ	12	7'-6"
C	1/2" ϕ	28	*
C1	1/2" ϕ	4	11'-0"
C2	1/2" ϕ	2	12'-0"
C3	1/2" ϕ	2	11'-6"
C4	1/2" ϕ	2	11'-3"
C5	1/2" ϕ	2	10'-9"
C6	1/2" ϕ	2	10'-6"
C7	1/2" ϕ	2	10'-0"
C8	1/2" ϕ	2	9'-9"
C9	1/2" ϕ	2	9'-6"
C10	1/2" ϕ	2	9'-3"

Bar	Size	No.	Length
D	1/2" ϕ	*	26'-3"
D1	1/2" ϕ	2	4'-6"
D2	1/2" ϕ	2	6'-6"
D3	1/2" ϕ	2	8'-9"
D4	1/2" ϕ	2	10'-9"
E	3/4" ϕ	39	7'-9"
E1	3/4" ϕ	10	6'-6"
E2	3/4" ϕ	10	6'-3"
E3	3/4" ϕ	4	5'-9"
F	1/2" ϕ	3	25'-9"
G	1/2" ϕ	1	27'-0"
H	3/4" ϕ	10	5'-0"

Additional Bill of Steel Both Roadways

H	Bars C Length	Bars D Number
16'-1"	9'-3"	15
16'-0"	9'-0"	15
15'-11"	9'-0"	15
15'-10"	9'-0"	15
15'-9"	8'-9"	15
15'-8"	8'-9"	15
15'-7"	8'-9"	15
15'-6"	8'-6"	15
15'-4"	8'-6"	15
15'-3"	8'-3"	14
15'-1"	8'-3"	14
15'-0"	8'-0"	14
14'-10"	8'-0"	14
14'-9"	7'-9"	14
14'-8"	7'-9"	14
14'-7"	7'-9"	14
14'-5"	7'-6"	14
14'-4"	7'-6"	14
14'-2"	7'-3"	13
14'-1"	7'-3"	13

Bill of Steel for Two Wingwalls

Bars	Size	Lgth.	Number Required When L=0'-0"	L=2'-0"	L=4'-0"	L=6'-0"	L=8'-0"	L=10'-0"	L=12'-0"
A2	3/4" ϕ	9'-0"	4	8	8	8	8	8	8
A3	3/4" ϕ	14'-6"	–	–	2	2	2	2	2
A4	3/4" ϕ	14'-0"	–	–	2	2	2	2	2
A5	3/4" ϕ	13'-6"	–	–	–	2	2	2	2
A6	3/4" ϕ	12'-9"	–	–	–	2	2	2	2
A7	3/4" ϕ	12'-3"	–	–	–	–	2	2	2
A8	3/4" ϕ	11'-9"	–	–	–	–	2	2	2
A9	3/4" ϕ	11'-0"	–	–	–	–	–	2	2
A10	3/4" ϕ	10'-6"	–	–	–	–	–	–	2
A11	3/4" ϕ	10'-0"	–	–	–	–	–	–	2
A12	3/4" ϕ	9'-3"	–	–	–	–	–	–	2
B2	3/4" ϕ	6'-6"	6	10	10	10	10	10	10
B3	3/4" ϕ	5'-3"	–	–	4	8	8	8	8
B4	3/4" ϕ	3'-9"	–	–	–	–	4	8	12
C11	1/2" ϕ	8'-9"	–	2	2	2	2	2	2
C12	1/2" ϕ	8'-3"	–	2	2	2	2	2	2
E9	3/4" ϕ	5'-6"	6	14	14	14	14	14	14
E8	3/4" ϕ	4'-9"	–	–	8	8	8	8	8
E6	3/4" ϕ	4'-6"	–	–	–	8	8	8	8
E7	3/4" ϕ	4'-0"	–	–	–	–	8	8	8
E5	3/4" ϕ	3'-9"	–	–	–	–	–	8	10
E4	3/4" ϕ	3'-6"	–	–	–	–	–	–	6

Bars	Size	No.	Length Required When L=0'-0"	L=2'-0"	L=4'-0"	L=6'-0"	L=8'-0"	L=10'-0"	L=12'-0"
D3	1/2" ϕ	2	10'-9"	12'-9"	12'-9"	12'-9"	12'-9"	12'-9"	12'-9"
D4	1/2" ϕ	2	10'-9"	12'-9"	14'-9"	14'-9"	14'-9"	14'-9"	14'-9"
D5	1/2" ϕ	2	10'-9"	12'-9"	14'-9"	16'-9"	17'-3"	17'-3"	17'-3"
D6	1/2" ϕ	2	10'-9"	12'-9"	14'-9"	16'-9"	18'-9"	19'-3"	19'-3"
D7	1/2" ϕ	2	10'-9"	12'-9"	14'-9"	16'-9"	18'-9"	20'-9"	21'-6"
D8	1/2" ϕ	14	10'-9"	12'-9"	14'-9"	16'-9"	18'-9"	20'-9"	22'-9"
F	1/2" ϕ	6	8'-3"	10'-3"	12'-3"	14'-3"	16'-3"	18'-3"	20'-3"
G1	1/2" ϕ	2	10'-0"	12'-0"	14'-0"	16'-0"	18'-0"	20'-0"	22'-0"

Estimated Quantities & Values of V & H
L= 0'-0" Both Wingwalls

18'-0" Roadway

V	H	Concrete Cu.Yds 1:2:4	Reinf. Steel Lbs.
1'-11"	16'-1"		
2'-1"	15'-11"		
2'-3"	15'-9"		
2'-4"	15'-8"		
2'-6"	15'-6"		
2'-9"	15'-3"		
3'-0"	15'-0"		
3'-3"	14'-9"		
3'-4"	14'-8"		
3'-7"	14'-5"		
3'-10"	14'-2"		

20'-0" Roadway

V	H	Concrete Cu.Yds 1:2:4	Reinf. Steel Lbs.
2'-0"	16'-0"	56 74	3608
2'-2"	15'-10"	56 48	3608
2'-3"	15'-9"	56 36	3603
2'-4"	15'-8"	56 24	3603
2'-5"	15'-7"	56 10	3603
2'-6"	15'-6"	55 98	3597
2'-8"	15'-4"	57 26	3597
2'-11"	15'-1"	56 84	3568
3'-2"	14'-10"	56 40	3562
3'-5"	14'-7"	55 94	3556
3'-8"	14'-4"	55 54	3551
3'-11"	14'-1"	55 10	3522

Estimated Quantities Two Wingwalls.

L	Concrete Cu.Yds 1:2:4	Reinf. Steel Lbs.
2'-0"	2 96	214
4'-0"	5 40	371
6'-0"	7 78	518
8'-0"	9 98	637
10'-0"	11 60	743
12'-0"	13 28	835

General Notes:
Specifications: Standard Bridge Specifications of the Tennessee Department of Highways.
Concrete in abutment shall be 1:2:4 mixture, coarse aggregate 1/2" to 1 1/4".
Reinforcing steel shall be deformed bars of structural steel or intermediate grade made by the O. H. process.
Forms: See specifications.
Finish: See specifications.
Rock Foundation: See specifications.

STATE OF TENNESSEE
DEPARTMENT OF HIGHWAYS AND PUBLIC WORKS
NASHVILLE

CONCRETE ABUTMENT

FOR

SLAB AND GIRDER BRIDGE

TOTAL HEIGHT 18'-0" ROADWAY 18' & 20'

SKEW 90°

1926

DESIGNED BY J. Grave DATE 8-3-26
DRAWN BY J. Grave DATE 8-3-26
TRACED BY A.H. Young DATE 9-21-26
CHECKED BY J.L. Erickson DATE 8-16-26

CORRECT J. L. Erickson BRIDGE ENGINEER

APPROVED Rutledge ASSISTANT STATE HIGHWAY ENGINEER

D-4-174

MICROFILMED

LAST REVISION 9-29-26

FED ROAD DIST NO	STATE	FED AID PROJ NO	FISCAL YEAR	SHEET NO	TOTAL SHEETS
8	TENN.	257-A	1932	29	64

TABLES OF DIMENSIONS AND ESTIMATED QUANTITIES

TABLE NO.1
BASED ON L = 21'-6"
FOR 26'-0" CLEAR SPANS OR LESS - FOR ALL SKEWS
FOR 28'-0" CLEAR SPANS AND MORE - FOR SKEWS OF 57° OR LESS.

TOTAL HEIGHT	H	W	A	B	C	D	E	F	STEEL REINFORCEMENT ALL BARS $\frac{1}{2}$"ø EXCEPT BARS K & L = 1"ø — BARS K NO LGTH	BARS L NO LGTH	BARS M NO LGTH	BARS N NO LGTH	BARS P NO LGTH	BARS R NO. LGTH	QUANTITIES PER FT LENGTH REINF CONC LBS. CU YDS.	REINF CONC LBS CU YDS	TOTAL QUANTITIES REINF CONC LBS CU YDS
10'	7'	2'-10"	2'-0"	6"	6"	2'-7"	0'-9"	3'-7"	3	22'-6"	3	23'-6"	22	13'-0"	40	3'-6"	18	22'-6"	40	5'-3"	572	0	733	1249	18	03
11	8	"	"	"	"	"	"	"	"	"	"	"	"	"	"	"	20	"	"	6'-3"	60	6	0	783	1322	19	42
12	9	"	"	"	"	2-9	0'-9"	3'-9"	"	"	"	"	"	"	"	"	22	"	"	7'-3"	64	0	0	834	1394	20	83
13	10	"	"	"	"	2'-10"	0'-10"	3'-10"	"	"	"	"	"	"	"	"	24	"	"	8'-3"	67	4	0	884	1466	22	28
14	11	"	"	"	"	2'-11"	0'-10"	3'-11"	"	"	"	"	"	"	"	"	26	"	"	9'-3"	70	8	0	934	1538	23	73
15	12	"	"	"	"	3'-0"	0'-10"	4'-0"	"	"	"	"	"	"	"	"	28	"	"	10'-3"	74	2	0	985	16 11	25	21
16	13	"	"	"	"	3'-1"	0'-10"	4'-1"	"	"	"	"	"	"	"	"	30	"	"	11'-3"	77	6	1	035	16 83	26	72
17	14	"	"	"	"	3'-2"	0'-10"	4'-2"	"	"	"	"	"	"	"	"	32	"	"	12'-3"	81	0	1	086	17 55	28	25
18	15	"	"	"	"	3'-3"	0'-11"	4'-3"	"	"	"	"	"	"	"	"	34	"	"	13'-3"	84	4	1	136	18 27	29	83
19	16	"	"	"	"	3'-4"	0'-11"	4'-4"	"	"	"	"	"	"	"	"	36	"	"	14'-3"	87	8	1	187	1900	31	42
20	17	"	"	"	"	3'-5"	0'-11"	4'-5"	"	"	"	"	"	"	"	"	38	"	"	15'-3"	91	2	1	237	1972	33	04
21	18	"	"	"	"	3'-6"	0'-11"	4'-6"	"	"	"	"	"	"	"	"	40	"	"	16'-3"	94	6	1	288	2044	34	69
22	19	"	"	"	"	3'-7"	0'-11"	4'-7"	"	"	"	"	"	"	"	"	42	"	"	17'-3"	98	0	1	338	2116	36	36
23	20	"	"	"	"	3'-8"	1'-0"	4'-8"	"	"	"	"	"	"	"	"	44	"	"	18'-3	101	4	1	388	2189	38	10
24	21	"	"	"	"	3'-9"	1'-0"	4'-9"	"	"	"	"	"	"	"	"	46	"	"	19'-3"	104	8	1	439	2261	39	84
25	22	"	"	"	"	3'-10"	1'-0"	4'-10"	"	"	"	"	"	"	"	"	48	"	"	20'-3"	108	2	1	489	2333	41	61
26	23	"	"	"	"	3'-11"	1'-0"	4'-11"	"	"	"	"	"	"	"	"	50	"	"	21'-3"	111	6	1	540	2405	43	42
27	24	"	"	"	"	4'-0"	1'-0"	5'-0"	"	"	"	"	"	"	"	"	52	"	"	22'-3"	115	0	1	590	2478	45	26
28	25	"	"	"	"	4'-1"	1'-1"	5'-1"	"	"	"	"	"	"	"	"	54	"	"	23'-3"	118	4	1	640	2550	47	17
29	26	"	"	"	"	4'-2"	1'-1"	5'-2"	"	"	"	"	"	"	"	"	56	"	"	24'-3"	121	8	1	691	2622	49	08
30	27	"	"	"	"	4'-3"	1'-1"	5'-3"	"	"	"	"	"	"	"	"	58	"	"	25'-3"	125	2	1	741	2694	51	03
31	28	"	"	"	"	4'-4"	1'-1"	5'-4"	"	"	"	"	"	"	"	"	60	"	"	26'-3"	128	6	1	792	2767	53	02
32	29	"	"	"	"	4'-5"	1'-1"	5'-5"	"	"	"	"	"	"	"	"	62	"	"	27'-3"	132	0	1	842	2839	55	05
33	30	"	"	"	"	4'-6"	1'-2"	5'-6"	"	"	"	"	"	"	"	"	64	"	"	28'-3"	135	4	1	892	2911	57	14
34	31	"	"	"	"	4'-7"	1'-2"	5'-7"	"	"	"	"	"	"	"	"	66	"	"	29'-3"	138	8	1	943	2983	59	25
35	32	"	"	"	"	4'-8"	1'-2"	5'-8"	"	"	"	"	"	"	"	"	68	"	"	30'-3"	142	2	1	993	3056	61	39
36	33	"	"	"	"	4'-9"	1'-2"	5'-9"	"	"	"	"	"	"	"	"	70	"	"	31'-3	145	6	2	044	3128	63	59
37	34	"	"	"	"	4'-10"	1'-2"	5'-10"	"	"	"	"	"	"	"	"	72	"	"	32'-3"	149	0	2	094	3200	65	82
38	35	"	"	"	"	4'-11"	1'-3"	5'-11"	"	"	"	"	"	"	"	"	74	"	"	33'-3"	152	4	2	144	3272	68	12
39	36	"	"	"	"	5'-0"	1'-3"	6'-0"	"	"	"	"	"	"	"	"	76	"	"	34'-3"	155	8	2	195	3345	70	44
40	37	2'-10"	2'-0"	6"	6"	5'-1"	1'-3"	6'-1"	3	22'-0"	3	23'-6"	22	13'-0"	40	3'-6"	78	22'-6"	40	35'-3"	159	1	2	245	3417	72	81

TABLE NO.2
BASED ON L = 25'-0"
FOR 28'-0" CLEAR SPANS AND MORE - FOR SKEWS OF 58° TO 63°

TOTAL HEIGHT	H	W	A	B	C	D	E	F	STEEL REINFORCEMENT ALL BARS $\frac{1}{2}$"ø EXCEPT BARS K & L = 1"ø — BARS K NO LGTH	BARS L NO LGTH	BARS M NO LGTH	BARS N NO LGTH	BARS P NO LGTH	BARS R NO. LGTH	QUANTITIES PER FT LENGTH REINF CONC LBS. CU YDS.	REINF CONC LBS CU YDS	TOTAL QUANTITIES REINF CONC LBS CU YDS
10'	7'	3'-0"	2'-2"	7"	6"	2'-9"	0'-9"	3'-9"	3	25'-6"	3	27'-0"	26	13'-3"	48	3'-6"	18	26'-0"	48	5'-3"	574	0	766	1468	21	72
11	8	"	"	"	"	2'-10"	0'-10"	3'-10"	"	"	"	"	"	"	"	"	20	"	"	6'-3"	60	8	0	816	1553	23	34
12	9	"	"	"	"	2'-11"	0'-10"	3'-11"	"	"	"	"	"	"	"	"	22	"	"	7'-3"	64	2	0	867	1638	24	98
13	10	"	"	"	"	3'-0"	0'-10"	4'-0"	"	"	"	"	"	"	"	"	24	"	"	8'-3"	67	6	0	917	1723	26	63
14	11	"	"	"	"	3'-1"	0'-10"	4'-1"	"	"	"	"	"	"	"	"	26	"	"	9'-3"	71	0	0	968	1808	28	31
15	12	"	"	"	"	3'-2"	0'-10"	4'-2"	"	"	"	"	"	"	"	"	28	"	"	10'-3"	74	4	1	018	1893	30	02
16	13	"	"	"	"	3'-3"	0'-11"	4'-3"	"	"	"	"	"	"	"	"	30	"	"	11'-3"	77	8	1	068	1978	31	78
17	14	"	"	"	"	3'-4"	0'-11"	4'-4"	"	"	"	"	"	"	"	"	32	"	"	12'-3"	81	2	1	119	2063	33	54
18	15	"	"	"	"	3'-5"	0'-11"	4'-5"	"	"	"	"	"	"	"	"	34	"	"	13'-3"	84	6	1	169	2148	35	33
19	16	"	"	"	"	3'-6"	0'-11"	4'-6"	"	"	"	"	"	"	"	"	36	"	"	14'-3"	88	0	1	220	2233	37	16
20	17	"	"	"	"	3'-7"	0'-11"	4'-7"	"	"	"	"	"	"	"	"	38	"	"	15'-3"	91	4	1	270	2318	39	01
21	18	"	"	"	"	3'-8"	1'-0"	4'-8"	"	"	"	"	"	"	"	"	40	"	"	16'-3"	94	8	1	321	2403	40	91
22	19	"	"	"	"	3'-9"	1'-0"	4'-9"	"	"	"	"	"	"	"	"	42	"	"	17'-3"	98	2	1	371	2488	42	83
23	20	"	"	"	"	3'-10"	1'-0"	4'-10"	"	"	"	"	"	"	"	"	44	"	"	18'-3"	101	6	1	421	2573	44	78
24	21	"	"	"	"	3'-11"	1'-0"	4'-11"	"	"	"	"	"	"	"	"	46	"	"	19'-3"	105	0	1	472	2658	46	76
25	22	"	"	"	"	4'-0"	1'-0"	5'-0"	"	"	"	"	"	"	"	"	48	"	"	20'-3"	108	4	1	522	2743	48	78
26	23	"	"	"	"	4'-1"	1'-1"	5'-1"	"	"	"	"	"	"	"	"	50	"	"	21'-3"	111	8	1	573	2828	50	86
27	24	"	"	"	"	4'-2"	1'-1"	5'-2"	"	"	"	"	"	"	"	"	52	"	"	22'-3"	115	2	1	623	2913	52	95
28	25	"	"	"	"	4'-3"	1'-1"	5'-3"	"	"	"	"	"	"	"	"	54	"	"	23'-3"	118	6	1	673	2998	55	07
29	26	"	"	"	"	4'-4"	1'-1"	5'-4"	"	"	"	"	"	"	"	"	56	"	"	24'-3"	122	0	1	724	3083	57	24
30	27	"	"	"	"	4'-5"	1'-1"	5'-5"	"	"	"	"	"	"	"	"	58	"	"	25'-3"	125	4	1	774	3168	59	44
31	28	"	"	"	"	4'-6"	1'-2"	5'-6"	"	"	"	"	"	"	"	"	60	"	"	26'-3"	128	8	1	825	3253	61	70
32	29	"	"	"	"	4'-7"	1'-2"	5'-7"	"	"	"	"	"	"	"	"	62	"	"	27'-3"	132	2	1	875	3338	63	99
33	30	"	"	"	"	4'-8"	1'-2"	5'-8"	"	"	"	"	"	"	"	"	64	"	"	28'-3"	135	6	1	925	3423	66	31
34	31	"	"	"	"	4'-9"	1'-2"	5'-9"	"	"	"	"	"	"	"	"	66	"	"	29'-3"	139	0	1	976	3508	68	68
35	32	"	"	"	"	4'-10"	1'-2"	5'-10"	"	"	"	"	"	"	"	"	68	"	"	30'-3"	142	4	2	026	3593	71	08
36	33	"	"	"	"	4'-11"	1'-3"	5'-11"	"	"	"	"	"	"	"	"	70	"	"	31'-3"	145	8	2	077	3678	73	56
37	34	"	"	"	"	5'-0"	1'-3"	6'-0"	"	"	"	"	"	"	"	"	72	"	"	32'-3"	149	2	2	127	3763	76	06
38	35	"	"	"	"	5'-1"	1'-3"	6'-1"	"	"	"	"	"	"	"	"	74	"	"	33'-3"	152	6	2	177	3848	78	60
39	36	"	"	"	"	5'-2"	1'-3"	6'-2"	"	"	"	"	"	"	"	"	76	"	"	34'-3"	156	0	2	228	3933	81	18
40	37	3'-0"	2'-2"	7"	6"	5'-3"	1'-3"	6'-3"	3	25'-6"	3	27'-0"	26	13'-3"	48	3'-6"	78	26'-0"	48	35'-3"	159	4	2	278	4018	83	82

NOTE: For number of bars T see special table below.

TABLE NO.3
BASED ON L = 23'-0"
FOR 28'-0" CLEAR SPANS AND MORE - FOR SKEWS OF 64° TO 71°

TOTAL HEIGHT	H	W	A	B	C	D	E	F	STEEL REINFORCEMENT ALL BARS $\frac{1}{2}$"ø EXCEPT BARS K & L = 1"ø — BARS K NO LGTH	BARS L NO LGTH	BARS M NO LGTH	BARS N NO LGTH	BARS P NO LGTH	BARS R NO. LGTH	QUANTITIES PER FT LENGTH REINF CONC LBS. CU YDS	REINF CONC LBS CU YDS	TOTAL QUANTITIES REINF CONC LBS CU YDS
10'	7'	3'-2"	2'-4"	8"	6"	2'-11"	0'-10"	3'-11"	3	23'-6"	3	25'-0"	24	13'-6"	44	3'-6"	18	24'-0"	44	5'-3"	576	0	800	1358	21	33
11	8	"	"	"	"	3'-0"	0'-10"	4'-0"	"	"	"	"	"	"	"	"	20	"	"	6'-3"	61	0	0	850	1437	22	89
12	9	"	"	"	"	3'-1"	0'-10"	4'-1"	"	"	"	"	"	"	"	"	22	"	"	7'-3"	64	4	0	901	1515	24	47
13	10	"	"	"	"	3'-2"	0'-10"	4'-2"	"	"	"	"	"	"	"	"	24	"	"	8'-3"	67	8	0	951	1593	26	08
14	11	"	"	"	"	3'-3"	0'-11"	4'-3"	"	"	"	"	"	"	"	"	26	"	"	9'-3"	71	2	1	002	1671	27	74
15	12	"	"	"	"	3'-4"	0'-11"	4'-4"	"	"	"	"	"	"	"	"	28	"	"	10'-3"	74	6	1	052	1749	29	40
16	13	"	"	"	"	3'-5"	0'-11"	4'-5"	"	"	"	"	"	"	"	"	30	"	"	11'-3"	78	0	1	102	1828	31	10
17	14	"	"	"	"	3'-6"	0'-11"	4'-6"	"	"	"	"	"	"	"	"	32	"	"	12'-3"	81	4	1	153	1906	32	82
18	15	"	"	"	"	3'-7"	0'-11"	4'-7"	"	"	"	"	"	"	"	"	34	"	"	13'-3"	84	8	1	203	1984	34	57
19	16	"	"	"	"	3'-8"	1'-0"	4'-8"	"	"	"	"	"	"	"	"	36	"	"	14'-3"	88	2	1	254	2062	36	38
20	17	"	"	"	"	3'-9"	1'-0"	4'-9"	"	"	"	"	"	"	"	"	38	"	"	15'-3"	91	6	1	304	2140	38	20
21	18	"	"	"	"	3'-10"	1'-0"	4'-10"	"	"	"	"	"	"	"	"	40	"	"	16'-3"	95	0	1	355	2219	40	05
22	19	"	"	"	"	3'-11"	1'-0"	4'-11"	"	"	"	"	"	"	"	"	42	"	"	17'-3"	98	4	1	405	2297	41	93
23	20	"	"	"	"	4'-0"	1'-0"	5'-0"	"	"	"	"	"	"	"	"	44	"	"	18'-3"	101	8	1	455	2375	43	85
24	21	"	"	"	"	4'-1"	1'-1"	5'-1"	"	"	"	"	"	"	"	"	46	"	"	19'-3"	105	2	1	506	2453	45	83
25	22	"	"	"	"	4'-2"	1'-1"	5'-2"	"	"	"	"	"	"	"	"	48	"	"	20'-3"	108	6	1	556	2531	47	82
26	23	"	"	"	"	4'-3"	1'-1"	5'-3"	"	"	"	"	"	"	"	"	50	"	"	21'-3"	112	0	1	607	2610	49	84
27	24	"	"	"	"	4'-4"	1'-1"	5'-4"	"	"	"	"	"	"	"	"	52	"	"	22'-3"	115	4	1	657	2688	51	91
28	25	"	"	"	"	4'-5"	1'-1"	5'-5"	"	"	"	"	"	"	"	"	54	"	"	23'-3"	118	8	1	707	2766	54	01
29	26	"	"	"	"	4'-6"	1'-2"	5'-6"	"	"	"	"	"	"	"	"	56	"	"	24'-3"	122	2	1	758	2844	56	18
30	27	"	"	"	"	4'-7"	1'-2"	5'-7"	"	"	"	"	"	"	"	"	58	"	"	25'-3"	125	6	1	808	2922	58	36
31	28	"	"	"	"	4'-8"	1'-2"	5'-8"	"	"	"	"	"	"	"	"	60	"	"	26'-3"	129	0	1	859	3001	60	59
32	29	"	"	"	"	4'-9"	1'-2"	5'-9"	"	"	"	"	"	"	"	"	62	"	"	27'-3"	132	4	1	909	3079	62	85
33	30	"	"	"	"	4'-10"	1'-2"	5'-10"	"	"	"	"	"	"	"	"	64	"	"	28'-3"	135	8	1	959	3157	65	16
34	31	"	"	"	"	4'-11"	1'-3"	5'-11"	"	"	"	"	"	"	"	"	66	"	"	29'-3"	139	2	2	010	3235	67	54
35	32	"	"	"	"	5'-0"	1'-3"	6'-0"	"	"	"	"	"	"	"	"	68	"	"	30'-3"	142	6	2	060	3313	69	94
36	33	"	"	"	"	5'-1"	1'-3"	6'-1"	"	"	"	"	"	"	"	"	70	"	"	31'-3"	146	0	2	111	3392	72	38
37	34	"	"	"	"	5'-2"	1'-3"	6'-2"	"	"	"	"	"	"	"	"	72	"	"	32'-3"	149	4	2	161	3470	74	86
38	35	"	"	"	"	5'-3"	1'-3"	6'-3"	"	"	"	"	"	"	"	"	74	"	"	33'-3"	152	8	2	211	3548	77	40
39	36	"	"	"	"	5'-4"	1'-4"	6'-4"	"	"	"	"	"	"	"	"	76	"	"	34'-3"	156	2	2	262	3626	80	01
40	37	3'-2"	2'-4"	8"	6"	5'-5"	1'-4"	6'-5"	3	23'-6"	3	25'-0"	24	13'-6"	44	3'-6"	78	24'-0"	44	35'-3"	159	6	2	312	3704	82	64

TABLE NO.4
BASED ON L = 21'-0"
FOR 28'-0" CLEAR SPANS AND MORE - FOR SKEWS OF 72° TO 90°

TOTAL HEIGHT	H	W	A	B	C	D	E	F	STEEL REINFORCEMENT ALL BARS $\frac{1}{2}$"ø EXCEPT BARS K & L = 1"ø — BARS K NO LGTH	BARS L NO LGTH	BARS M NO LGTH	BARS N NO LGTH	BARS P NO LGTH	BARS R NO. LGTH	QUANTITIES PER FT LENGTH REINF CONC LBS. CU YDS	REINF CONC LBS CU YDS	TOTAL QUANTITIES REINF CONC LBS CU YDS
10'	7'	3'-4"	2'-6"	9"	6"	3'-1"	0'-10"	4'-1"	3	21'-6"	3	23'-0"	22	13'-9"	40	3'-6"	18	22'-0"	40	5'-3"	57	8	0	833	1248	20	80
11	8	"	"	"	"	3'-2"	0'-10"	4'-2"	"	"	"	"	"	"	"	"	20	"	"	6'-3"	61	2	0	883	1319	22	31
12	9	"	"	"	"	3'-3"	0'-11"	4'-3"	"	"	"	"	"	"	"	"	22	"	"	7'-3"	64	6	0	934	1390	23	86
13	10	"	"	"	"	3'-4"	0'-11"	4'-4"	"	"	"	"	"	"	"	"	24	"	"	8'-3"	68	0	0	984	1462	25	42
14	11	"	"	"	"	3'-5"	0'-11"	4'-5"	"	"	"	"	"	"	"	"	26	"	"	9'-3"	71	4	1	035	1533	27	02
15	12	"	"	"	"	3'-6"	0'-11"	4'-6"	"	"	"	"	"	"	"	"	28	"	"	10'-3"	74	8	1	085	1605	28	64
16	13	"	"	"	"	3'-7"	0'-11"	4'-7"	"	"	"	"	"	"	"	"	30	"	"	11'-3"	78	2	1	135	1676	30	29
17	14	"	"	"	"	3'-8"	1'-0"	4'-8"	"	"	"	"	"	"	"	"	32	"	"	12'-3	81	6	1	186	1747	32	00
18	15	"	"	"	"	3'-9"	1'-0"	4'-9"	"	"	"	"	"	"	"	"	34	"	"	13'-3"	85	0	1	236	1819	33	71
19	16	"	"	"	"	3'-10"	1'-0"	4'-10"	"	"	"	"	"	"	"	"	36	"	"	14'-3"	88	4	1	287	1890	35	46
20	17	"	"	"	"	3'-11"	1'-0"	4'-11"	"	"	"	"	"	"	"	"	38	"	"	15'-3"	91	8	1	337	1962	37	25
21	18	"	"	"	"	4'-0"	1'-0"	5'-0"	"	"	"	"	"	"	"	"	40	"	"	16'-3"	95	2	1	388	2033	39	06
22	19	"	"	"	"	4'-1"	1'-1"	5'-1"	"	"	"	"	"	"	"	"	42	"	"	17'-3"	98	6	1	438	2104	40	94
23	20	"	"	"	"	4'-2"	1'-1"	5'-2"	"	"	"	"	"	"	"	"	44	"	"	18'-3"	102	0	1	488	2176	42	83
24	21	"	"	"	"	4'-3"	1'-1"	5'-3"	"	"	"	"	"	"	"	"	46	"	"	19'-3"	105	4	1	539	2247	44	76
25	22	"	"	"	"	4'-4"	1'-1"	5'-4"	"	"	"	"	"	"	"	"	48	"	"	20'-3"	108	8	1	589	2319	46	72
26	23	"	"	"	"	4'-5"	1'-1"	5'-5"	"	"	"	"	"	"	"	"	50	"	"	21'-3"	112	2	1	640	2390	48	72
27	24	"	"	"	"	4'-6"	1'-2"	5'-6"	"	"	"	"	"	"	"	"	52	"	"	22'-3"	115	6	1	690	2461	50	79
28	25	"	"	"	"	4'-7"	1'-2"	5'-7"	"	"	"	"	"	"	"	"	54	"	"	23'-3"	119	0	1	740	2533	52	87
29	26	"	"	"	"	4'-8"	1'-2"	5'-8"	"	"	"	"	"	"	"	"	56	"	"	24'-3"	122	4	1	791	2604	55	00
30	27	"	"	"	"	4'-9"	1'-2"	5'-9"	"	"	"	"	"	"	"	"	58	"	"	25'-3"	125	8	1	841	2676	57	16
31	28	"	"	"	"	4'-10"	1'-2"	5'-10"	"	"	"	"	"	"	"	"	60	"	"	26'-3"	129	2	1	892	2747	59	37
32	29	"	"	"	"	4'-11"	1'-3"	5'-11"	"	"	"	"	"	"	"	"	62	"	"	27'-3"	132	6	1	942	2818	61	65
33	30	"	"	"	"	5'-0"	1'-3"	6'-0"	"	"	"	"	"	"	"	"	64	"	"	28'-3"	136	0	1	992	2890	63	94
34	31	"	"	"	"	5'-1"	1'-3"	6'-1"	"	"	"	"	"	"	"	"	66	"	"	29'-3"	139	4	2	043	2961	66	31
35	32	"	"	"	"	5'-2"	1'-3"	6'-2"	"	"	"	"	"	"	"	"	68	"	"	30'-3"	142	8	2	093	3033	68	70
36	33	"	"	"	"	5'-3"	1'-3"	6'-3"	"	"	"	"	"	"	"	"	70	"	"	31'-3"	146	2	2	144	3104	71	13
37	34	"	"	"	"	5'-4"	1'-4"	6'-4"	"	"	"	"	"	"	"	"	72	"	"	32'-3"	149	6	2	194	3175	73	61
38	35	"	"	"	"	5'-5"	1'-4"	6'-5"	"	"	"	"	"	"	"	"	74	"	"	33'-3"	153	0	2	244	3247	76	14
39	36	"	"	"	"	5'-6"	1'-4"	6'-6"	"	"	"	"	"	"	"	"	76	"	"	34'-3"	156	4	2	295	3318	78	72
40	37	3'-4"	2'-6"	9"	6"	5'-7"	1'-4"	6'-7"	3	21'-6"	3	23'-0"	22	13'-9"	40	3'-6"	78	22'-0"	40	35'-3"	159	8	2	345	3390	81	36

NOTE: For number of bars T see special table below.

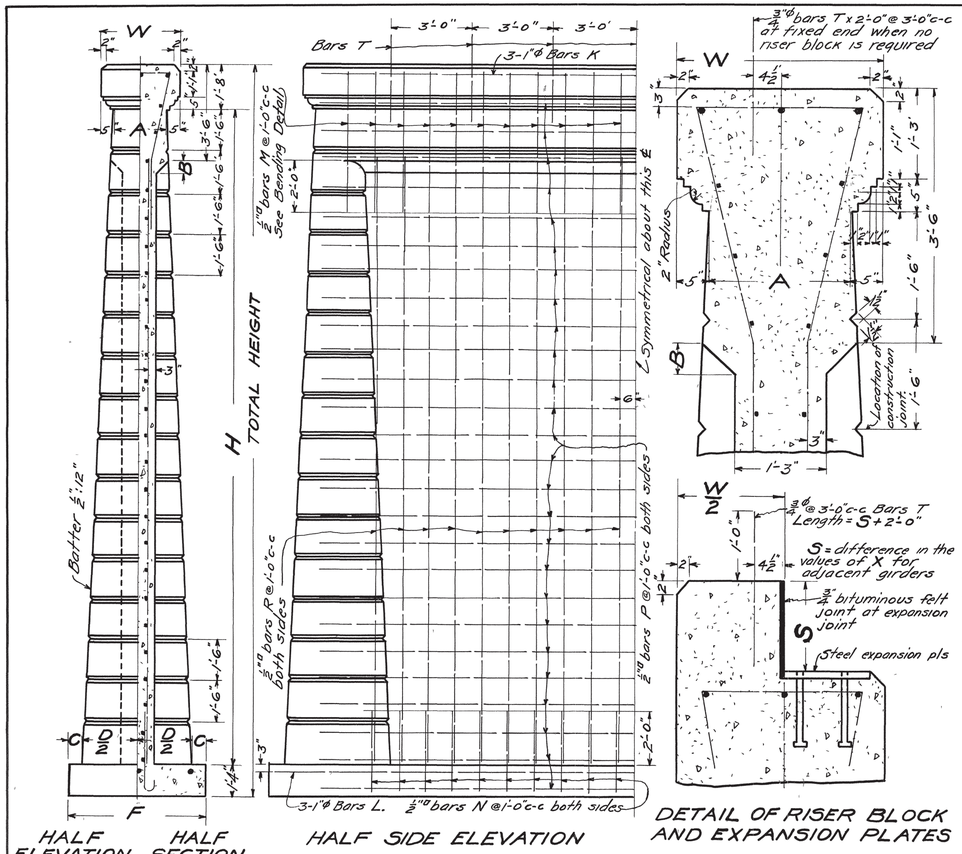

DETAIL OF RISER BLOCK AND EXPANSION PLATES

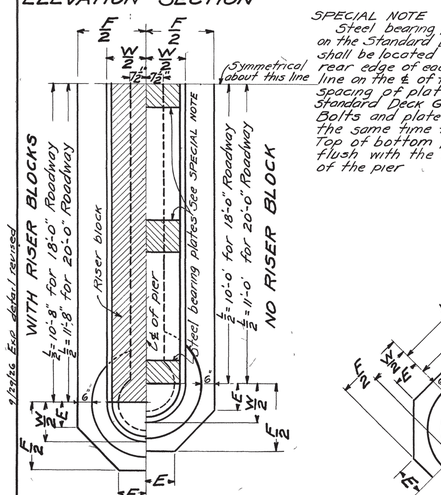

QUARTER PLAN WITH RISER BLOCK

QUARTER PLAN WITHOUT RISER BLOCK

SPECIAL NOTE
Steel bearing plates as called for on the Standard Deck Girder drawings shall be located as shown, i.e the rear edge of each plate shall be in line on the ℄ of the pier. Number and spacing of plates is shown on the Standard Deck Girder drawings. Bolts and plates shall be set at the same time the pier is poured. Top of bottom plates to be flush with the top surface of the pier

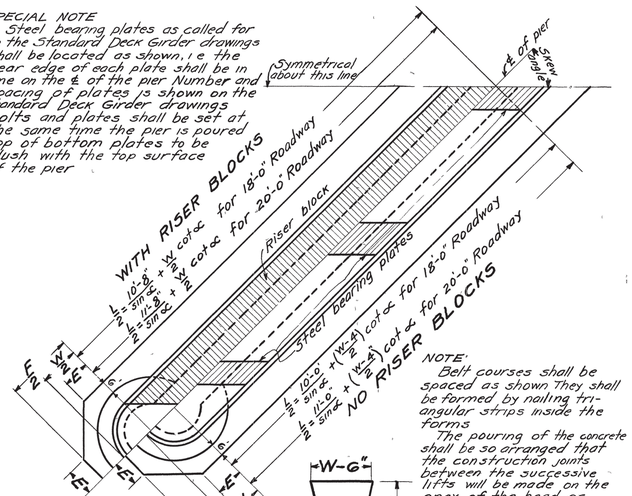

NOTE:
Belt courses shall be spaced as shown. They shall be formed by nailing triangular strips inside the forms.
The pouring of the concrete shall be so arranged that the construction joints between the successive lifts will be made on the apex of the bead as shown.
The bottom belt course shall be so located that the distance between it and the ground line or the L W elevation shall not exceed the spacing of belt courses shown on the plan.

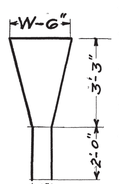

DETAIL OF BARS M

TABLE OF BARS T BOTH ROADWAYS FOR ONE FIXED END

SKEW. ANGLE ∝	NUMBER
90° TO 62°	8
61° TO 52°	9
31° TO 45°	10
44° TO 40°	11
39 TO 36°	12
35° TO 33°	13
32° TO 31°	14
30° TO 29°	15
28° TO 27°	16

For two fixed ends double number of bars above

GENERAL NOTES

Specifications Standard Bridge Specifications of the Tennessee Department of Highways
Concrete shall be 1:2½:5 mixture; coarse aggregate ¾" to 1½"
Reinforcing steel shall be deformed bars of structural steel or intermediate grade made by the O.H process
Forms: See Specifications
Forms: See Specifications
Rock Foundation: See Specifications.

STATE OF TENNESSEE
DEPARTMENT OF HIGHWAYS AND PUBLIC WORKS
NASHVILLE

STANDARD

CONCRETE PIERS

FOR
SLAB AND GIRDER BRIDGES
TOTAL HEIGHTS 10' TO 40' ROADWAYS 18' & 20'
1926

CORRECT: L. N. Hardison, BRIDGE ENGINEER
APPROVED: R. Rhea, ASSISTANT STATE HIGHWAY ENGINEER

D-4-159

DESIGNED BY W.H.G. DATE 6-8-26
DRAWN BY [illegible] DATE 6-12-26
TRACED BY [illegible] DATE 6-12-26
CHECKED B

FED ROAD DIST NO	STATE	FED AID PROJ NO	FISCAL YEAR	SHEET NO	TOTAL SHEETS
8	TENN		19		

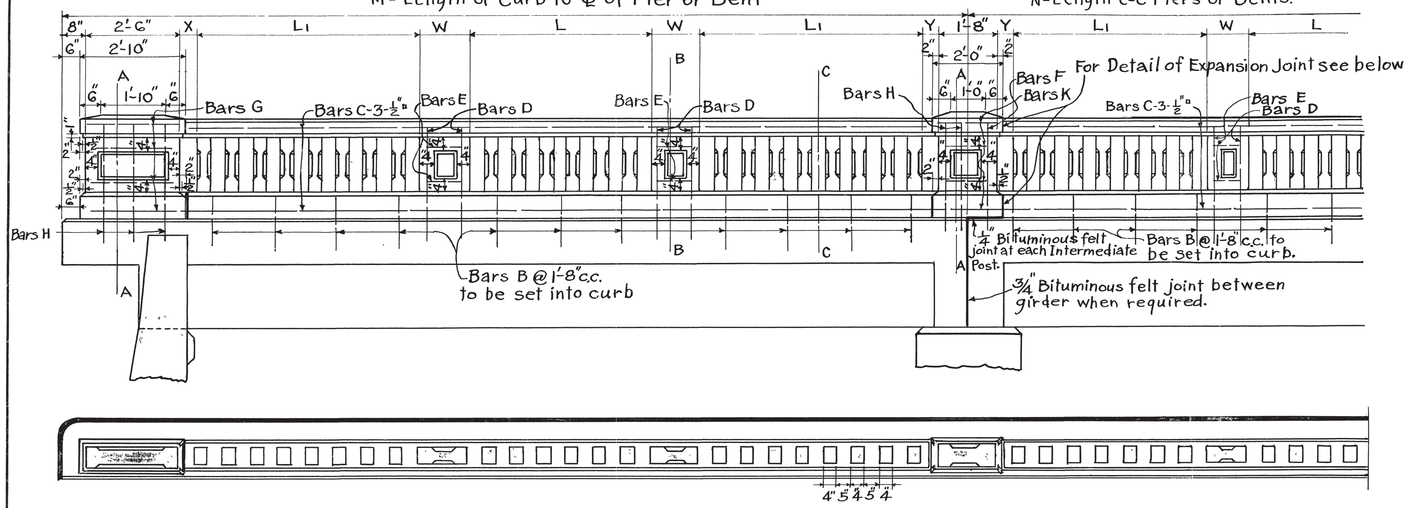

Detail of Rail for End Spans

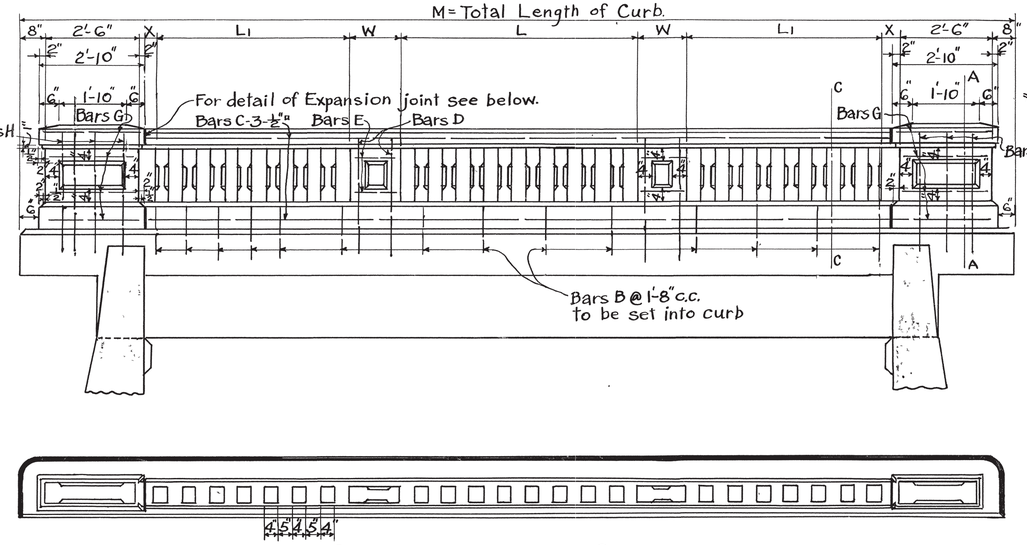

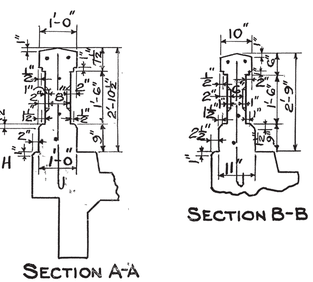

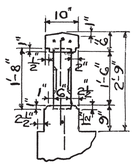

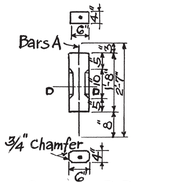

Detail of Single Span Structures

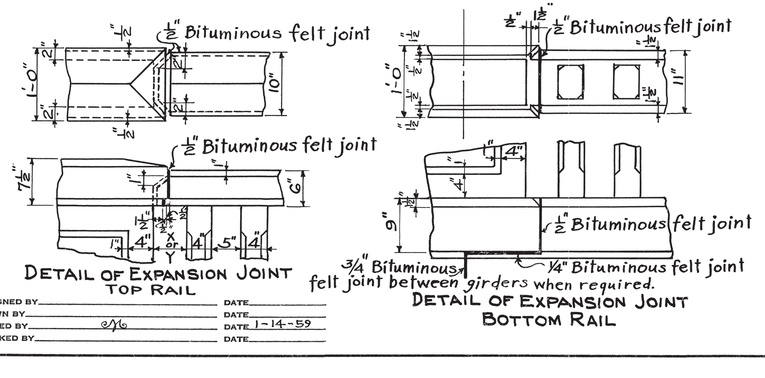

Detail of Expansion Joint Top Rail

Detail of Expansion Joint Bottom Rail

DESIGNED BY	DATE
DRAWN BY	DATE
RETRACED BY 2/16	DATE 1-14-59
CHECKED BY	DATE

Bill of Steel and Estimated Quantities for Two Rail Posts as Listed

Description	Mark	No.	Size	Length	Steel Lbs.	Concrete Cu. Yds.
Post at End of Span	G	10	½"a	2'-3"	39.5	.45
	H	6	½"a	4'-0"		
Intermediate Posts.	F	2	½"a	2'-6"	29.9	.32
	H	4	½"a	4'-0"		
	K	10	½"a	1'-5"		

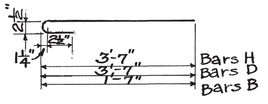

Table of Dimensions and Estimated Quantities for End Spans

Clear Span Feet	Dimensions M	X	Y	W	L1	L	Steel Reinforcement All Bars ½"a — Bars A No.	Bars A Length	Bars B No.	Bars B Length	Bars C No.	Bars C Length	Bars D No.	Bars D Length	Bars E No.	Bars E Length	Estimated Quant. Steel Lbs.*	Concrete Cu. Yds.*
12	16'-7"	5"	5"	1'-3"	2 @ 5'-3"	—	28	2'-7"	16	2'-0"	6	12'-0"	4	4'-0"	4	1'-0"	168.8	1.620
14	18'-7"	5"	5"	1'-9"	2 @ 6'-0"	—	32	2'-7"	16	2'-0"	6	14'-0"	4	4'-0"	4	1'-6"	189.8	1.886
16	20'-7"	5"	5"	1'-8"	2 @ 3'-9"	1 @ 4'-11"	32	2'-7"	18	2'-0"	6	16'-0"	8	4'-0"	8	1'-5"	221.8	2.152
18	22'-7"	5½"	5½"	1'-6"	2 @ 4'-6"	1 @ 5'-8"	38	2'-7"	20	2'-0"	6	18'-0"	8	4'-0"	8	1'-3"	247.7	2.419
20	24'-7"	5"	5"	1'-5"	2 @ 5'-3"	1 @ 6'-5"	44	2'-7"	24	2'-0"	6	20'-0"	8	4'-0"	8	1'-2"	277.7	2.685
22	26'-7"	5"	5"	1'-8"	2 @ 6'-0"	1 @ 6'-9"	48	2'-7"	24	2'-0"	6	22'-0"	8	4'-0"	8	1'-5"	298.6	2.951
24	28'-7"	5½"	5½"	1'-6"	2 @ 6'-9"	1 @ 7'-2"	54	2'-7"	30	2'-0"	6	24'-0"	8	4'-0"	8	1'-3"	331.3	3.217
26	30'-7"	5"	5"	1'-5"	2 @ 7'-6"	1 @ 7'-11"	60	2'-7"	30	2'-0"	6	26'-0"	8	4'-0"	8	1'-2"	354.4	3.483
28	32'-10"	4½"	4½"	1'-7"	2 @ 6'-0"	2 @ 5'-8"	60	2'-7"	32	2'-0"	6	28'-2"	12	4'-0"	12	1'-4"	388.5	3.782
30	34'-10"	4½"	4½"	1'-9"	2 @ 6'-0"	2 @ 6'-5"	64	2'-7"	32	2'-0"	6	30'-2"	12	4'-0"	12	1'-6"	409.4	4.048
32	36'-10"	4½"	4½"	1'-5"	2 @ 6'-9"	2 @ 7'-2"	72	2'-7"	40	2'-0"	12	17'-0"	12	4'-0"	12	1'-2"	457.3	4.314
34	38'-10"	4½"	4½"	1'-7"	2 @ 7'-6"	2 @ 7'-2"	76	2'-7"	40	2'-0"	12	18'-0"	12	4'-0"	12	1'-4"	478.1	4.581
36	40'-10"	4½"	4½"	1'-9"	2 @ 7'-6"	2 @ 7'-11"	80	2'-7"	40	2'-0"	12	19'-0"	12	4'-0"	12	1'-6"	499.1	4.847
38	42'-10"	5½"	5½"	1'-8"	2 @ 6'-0"	3 @ 6'-5"	80	2'-7"	40	2'-0"	12	20'-0"	16	4'-0"	16	1'-5"	527.3	5.113
40	44'-10"	4"	4"	1'-8"	2 @ 6'-0"	3 @ 7'-2"	86	2'-7"	40	2'-0"	12	21'-0"	16	4'-0"	16	1'-5"	560.6	5.379
50	54'-10"	4½"	4½"	1'-7"	2 @ 6'-9"	4 @ 7'-2"	108	2'-7"	48	2'-0"	12	26'-0"	20	4'-0"	20	1'-4"	692.6	6.722
60	64'-10"	4½"	4½"	1'-5"	2 @ 6'-0"	5 @ 7'-11"	132	2'-7"	66	2'-0"	12	31'-0"	24	4'-0"	24	1'-2"	833.3	8.053

Table of Dimensions and Estimated Quantities for Intermediate Spans

Clear Span Feet	Dimensions N	Y	W	L1	L	Steel Reinforcement All Bars ½"a — Bars A No.	Bars A Length	Bars B No.	Bars B Length	Bars C No.	Bars C Length	Bars D No.	Bars D Length	Bars E No.	Bars E Length	Estimated Quantities Steel Lbs.*	Concrete Cu. Yds.*
12	14'-6"	5"	1'-6"	2 @ 5'-3"	—	28	2'-7"	16	2'-0"	6	12'-2"	4	4'-0"	4	1'-3"	170.5	1.653
14	16'-6"	5"	2'-0"	2 @ 6'-0"	—	32	2'-7"	16	2'-0"	6	14'-2"	4	4'-0"	4	1'-9"	191.5	1.920
16	18'-6"	5"	1'-5"	2 @ 4'-6"	1 @ 4'-2"	34	2'-7"	18	2'-0"	6	16'-2"	8	4'-0"	8	1'-2"	225.4	2.185
18	20'-6"	5"	1'-8"	2 @ 4'-6"	1 @ 5'-8"	38	2'-7"	20	2'-0"	6	18'-2"	8	4'-0"	8	1'-5"	249.8	2.451
20	22'-6"	5½"	1'-6"	2 @ 5'-3"	1 @ 6'-5"	44	2'-7"	24	2'-0"	6	20'-2"	8	4'-0"	8	1'-3"	279.1	2.717
22	24'-6"	5"	1'-5"	2 @ 6'-0"	1 @ 7'-2"	50	2'-7"	26	2'-0"	6	22'-2"	8	4'-0"	8	1'-2"	305.6	2.983
24	26'-6"	5"	1'-8"	2 @ 6'-9"	1 @ 7'-2"	54	2'-7"	30	2'-0"	6	24'-2"	8	4'-0"	8	1'-5"	333.4	3.250
26	28'-6"	5½"	1'-6"	2 @ 7'-6"	1 @ 7'-11"	60	2'-7"	30	2'-0"	6	26'-2"	8	4'-0"	8	1'-3"	355.8	3.516
28	31'-0"	4½"	1'-9"	2 @ 6'-0"	2 @ 5'-8"	60	2'-7"	32	2'-0"	6	28'-8"	12	4'-0"	12	1'-6"	392.8	3.849
30	33'-0"	4½"	1'-11"	2 @ 6'-0"	2 @ 6'-5"	64	2'-7"	32	2'-0"	6	30'-8"	12	4'-0"	12	1'-8"	413.8	4.115
32	35'-0"	4½"	1'-7"	2 @ 6'-9"	2 @ 7'-2"	72	2'-7"	40	2'-0"	12	17'-2"	12	4'-0"	12	1'-4"	460.7	4.381
34	37'-0"	4½"	1'-9"	2 @ 7'-6"	2 @ 7'-2"	76	2'-7"	40	2'-0"	12	18'-2"	12	4'-0"	12	1'-6"	481.7	4.647
36	39'-0"	4½"	1'-11"	2 @ 7'-6"	2 @ 7'-11"	80	2'-7"	40	2'-0"	12	19'-2"	12	4'-0"	12	1'-8"	502.6	4.914
38	41'-0"	4½"	1'-10"	2 @ 6'-0"	3 @ 6'-5"	80	2'-7"	40	2'-0"	12	20'-2"	16	4'-0"	16	1'-7"	531.2	5.180
40	43'-0"	5"	1'-9"	2 @ 6'-0"	3 @ 7'-2"	86	2'-7"	46	2'-0"	12	21'-2"	16	4'-0"	16	1'-6"	564.0	5.446
50	53'-0"	5"	1'-8"	2 @ 6'-9"	4 @ 7'-2"	108	2'-7"	48	2'-0"	12	26'-2"	20	4'-0"	20	1'-5"	684.3	6.788
60	63'-0"	4½"	1'-6"	2 @ 6'-0"	5 @ 7'-11"	132	2'-7"	66	2'-0"	12	31'-2"	24	4'-0"	24	1'-3"	836.7	8.119

Table of Dimensions and Estimated Quantities for Rail on Single Span Structures

Clear Span Feet	Dimensions M	X	W	L1	L	Steel Reinforcement All Bars ½"a — Bars A No.	Bars A Length	Bars B No.	Bars B Length	Bars C No.	Bars C Length	Bars D No.	Bars D Length	Bars E No.	Bars E Length	Estimated Quant. Steel Lbs.*	Concrete Cu. Yds.*
12	18'-8"	5"	1'-0"	2 @ 5'-3"	—	28	2'-7"	16	2'-0"	6	11'-8"	4	4'-0"	4	0'-9"	166.2	1.587
14	20'-8"	5"	1'-6"	2 @ 6'-0"	—	32	2'-7"	16	2'-0"	6	13'-8"	4	4'-4"	4	1'-3"	187.1	1.853
16	22'-8"	5½"	1'-6"	2 @ 3'-9"	1 @ 4'-11"	32	2'-7"	18	2'-0"	6	15'-8"	8	4'-0"	8	1'-3"	218.9	2.119
18	24'-8"	5"	1'-5"	2 @ 4'-6"	1 @ 5'-8"	38	2'-7"	20	2'-0"	6	17'-8"	8	4'-0"	8	1'-2"	245.4	2.385
20	26'-8"	5½"	1'-3"	2 @ 5'-3"	1 @ 6'-5"	44	2'-7"	24	2'-0"	6	19'-8"	8	4'-0"	8	1'-0"	274.8	2.651
22	28'-8"	5½"	1'-6"	2 @ 6'-0"	1 @ 6'-5"	48	2'-7"	24	2'-0"	6	21'-8"	8	4'-0"	8	1'-3"	295.7	2.918
24	30'-8"	5"	1'-5"	2 @ 6'-9"	1 @ 7'-2"	54	2'-7"	30	2'-0"	6	23'-8"	8	4'-0"	8	1'-2"	329.1	3.184
26	32'-8"	5½"	1'-3"	2 @ 7'-6"	1 @ 7'-11"	60	2'-7"	30	2'-0"	6	25'-8"	8	4'-0"	8	1'-0"	351.6	3.450
28	34'-8"	4½"	1'-5"	2 @ 6'-0"	2 @ 5'-8"	60	2'-7"	32	2'-0"	6	27'-8"	12	4'-0"	12	1'-2"	384.2	3.716
30	36'-8"	4½"	1'-7"	2 @ 6'-0"	2 @ 6'-5"	64	2'-7"	32	2'-0"	6	29'-8"	12	4'-0"	12	1'-4"	405.1	3.982
32	38'-8"	4½"	1'-3"	2 @ 6'-9"	2 @ 7'-2"	72	2'-7"	40	2'-0"	12	16'-8"	12	4'-0"	12	1'-0"	452.1	4.243
34	40'-8"	4½"	1'-5"	2 @ 7'-6"	2 @ 7'-2"	76	2'-7"	40	2'-0"	12	17'-8"	12	4'-0"	12	1'-2"	473.1	4.515
36	42'-8"	4½"	1'-7"	2 @ 7'-6"	2 @ 7'-11"	80	2'-7"	40	2'-0"	12	18'-8"	12	4'-0"	12	1'-4"	493.9	4.780
38	44'-8"	4½"	1'-7"	2 @ 6'-0"	3 @ 6'-5"	80	2'-7"	40	2'-0"	12	19'-8"	16	4'-0"	16	1'-4"	522.6	5.046
40	46'-8"	5"	1'-6"	2 @ 6'-0"	3 @ 7'-2"	86	2'-7"	46	2'-0"	12	20'-8"	16	4'-0"	16	1'-3"	555.4	5.312
50	56'-8"	4"	1'-6"	2 @ 6'-9"	4 @ 7'-2"	108	2'-7"	48	2'-0"	12	25'-8"	20	4'-0"	20	1'-3"	677.7	6.655
60	66'-8"	4½"	1'-4"	2 @ 6'-0"	5 @ 7'-11"	132	2'-7"	66	2'-0"	12	30'-8"	24	4'-0"	24	1'-1"	828.2	7.986

* See also quantities for rail posts.

General Notes:

Specifications: Standard Road and Bridge Specifications of the Tennessee Department of Highways and Public Works.
Concrete shall be Class "S"
Reinforcing Steel: See Specifications.
Forms and Finish: See Specifications.

Spindles shall be precast in steel forms & shall not be handled for seven days after they have been poured. Top surfaces of spindles, as they lie in their molds, when cast in a horizontal position, shall be carefully floated to a true plane before the concrete obtains its permanent set.

SPECIAL NOTE:
Handrail to be built as detailed, no chamfer shall be used unless specifically shown.

STATE OF TENNESSEE
DEPARTMENT OF HIGHWAYS AND PUBLIC WORKS
NASHVILLE

STANDARD
CONCRETE HANDRAIL
SPINDLE TYPE
FOR
SLAB AND GIRDER BRIDGES
1925

CORRECT Fred Green
BRIDGE ENGINEER
APPROVED C.H. Long
STATE HIGHWAY ENGINEER

D-4-95

MICROFILMED

50's & 60' Span added & Reinforcing Steel revised for new weights 7/3/31
Revised - Special Note Added 2/6/29.

THIS DOCUMENT HAS BEEN DIGITALLY SIGNED AND SEALED BY:

Lori Fiorentino

Digitally signed by Lori Fiorentino
Date: 2024.11.14 10:51:56 -05'00'

PRINTED COPIES OF THIS DOCUMENT ARE NOT CONSIDERED SIGNED AND SEALED. THE SIGNATURE MUST BE VERIFIED ON THE ELECTRONIC DOCUMENTS.

TENNESSEE DEPARTMENT OF TRANSPORTATION
MATERIALS & TESTS DIVISION- GEOTECHNICAL ENGINEERING SECTION
7345 REGION LN.
KNOXVILLE, TN 37914
LORI ANN FIORENTINO, P.E. NO. 113743

THE ABOVE NAMED PROFESSIONAL ENGINEER SHALL BE RESPONSIBLE FOR THE FOLLOWING SHEETS IN ACCORDANCE OF TENN. CODE ANN. §62-2-306.

SHEET NAME	SHEET NO.
SIGNATURE SHEET	GEOTECH-SIGN1
GEOTECHNICAL INDEX	G-1
GEOTECHNICAL NOTES & EST. QTYS.	G-2
GEOTECHNICAL LAYOUT	G-3
GEOTECHNICAL TYPICAL SECTIONS	G-4

YEAR	PROJECT NO.	SHEET NO.
2025	BR-STP-107(28)	GEOTECH-SIGN1

STATE OF TENNESSEE
DEPARTMENT OF TRANSPORTATION

SIGNATURE SHEET

$$$$$$SYTIME$$$$$$$
$$$$DGNSPECS$$$$$$$

TYPE	YEAR	PROJECT NO.	SHEET NO.
PS&E	2025	BR-STP-107(28)	G-1

GEOTECHNICAL INDEX

SHEET NAME	SHEET NO.
SIGNATURE SHEET	GEOTECH-SIGN1
GEOTECHNICAL INDEX	G-1
GEOTECHNICAL NOTES & EST. QTYS	G-2
GEOTECHNICAL LAYOUT	G-3
GEOTECHNICAL TYPICAL SECTIONS	G-4

SEALED BY

LORI ANN FIORENTINO
REGISTERED ENGINEER
AGRICULTURE
COMM RG
STATE OF TENNESSEE
Lori Ann Fiorentino
11/14/2024

STATE OF TENNESSEE
DEPARTMENT OF TRANSPORTATION

GEOTECHNICAL INDEX

$$$$$SYTIME$$$$$$$
$$$$DGNSPEC$$$$$$$

TYPE	YEAR	PROJECT NO.	SHEET NO.
PS&E	2025	BR-STP-107(28)	G-2

DEFINTION OF EARTHWORK TERMS

THE TERMS AND DEFINITIONS BELOW SHALL CHARACTERIZE THE MATERIAL TYPE THAT WILL BE ENCOUNTERED DURING EXCAVATION AND GRADING. SEE TYPE MATERIAL REFERENCE IN TYPICAL SECTIONS LEGEND.

A. SOIL MATERIAL

SOIL MATERIAL IS MATERIAL THAT IS PREDOMINANTLY MADE UP OF NATURALLY OCCURRING MINERAL PARTICLES WHICH ARE FAIRLY READILY SEPARATED INTO RELATIVELY SMALL PIECES, AND IN WHICH THE MASS MAY CONTAIN AIR, WATER OR ORGANIC MATERIALS. THIS MATERIAL MAY CONTAIN ROCK PIECES IN THE FORM OF DISCONNECTED SLABS, LENSES, OR BOULDERS OF LESS THAN APPROXIMATELY 0.5 CUBIC YARDS. THE MAIN SOIL GROUPS CONSIST OF CLAY, SILT, SAND, GRAVEL, COBBLES, BOULDERS (LESS THAN 0.5 CUBIC YARD VOLUME) OR A COMBINATION OF ANY OF THE CONSTITUENTS. FOR CONSTRUCTION PURPOSES, THIS MATERIAL WOULD TYPICALLY BE CONSIDERED TO BE EXCAVATABLE BY CONVENTIONAL EXCAVATION MACHINERY SUCH AS PANS, TRACK HOES, OR FRONT END EXCAVATORS/LOADERS.

B. SOLID ROCK MATERIAL

SOLID ROCK MATERIAL IS THAT NATURALLY OCCURRING MATERIAL COMPOSED OF MINERAL PARTICLES SO FIRMLY BONDED TOGETHER THAT RELATIVELY GREAT EFFORT IS REQUIRED TO SEPARATE THE PARTICLES (I.E. BLASTING OR HEAVY CRUSHING FORCES). FOR CONSTRUCTION PURPOSES, THIS MATERIAL WOULD TYPICALLY HAVE TO BE BLASTED TO SEPARATE INTO PIECES SMALL ENOUGH TO LOAD AND TRANSPORT ON EARTH MOVING TRUCKS AND WHICH WHEN SUBJECTED TO PROPER PRE- SPLIT AND PRODUCTION BLASTING WOULD RESULT IN A UNIFORM STABLE ROCK CUT FACE. NOTE THAT THIS MATERIAL WOULD NOT BY DEFINITION NECESSARILY BE PROVEN SOURCE OF ANY ROCK TYPE AGGREGATE SUCH AS SOLID ROCK, GRADED SOLID ROCK, RIP RAP. OR OTHER ROCK AGGREGATE CONSTRUCTION PRODUCTS.

C. SOFT ROCK OR DEGRADABLE ROCK

THIS MATERIAL IS THAT NATURALLY OCCURRING MATERIAL COMPOSED OF MINERAL PARTICLES THAT ARE SO FIRMLY BONDED SUCH THAT THEY ARE NOT FAIRLY READILY SEPARATED INTO SMALL PIECES YET HAS SUCH RELATIVELY LOW BONDING STRENGTH THAT WOULD ALLOW FOR SEPARATING INTO SMALL PIECES THROUGH MODERATE TO HEAVY CRUSHING FORCES. FOR CONSTRUCTION PURPOSES THIS MATERIAL WOULD HAVE TO BE SUBJECTED TO RIPPING TYPE EQUIPMENT, HOE RAMS, OR RUGGED USE OF A LARGE BULLDOZER IN ORDER TO SEPARATE THE MATERIAL SUCH THAT IT CAN BE READILY LOADED INTO EARTH MOVING TRUCKS. THESE MATERIALS WOULD TYPICALLY BE SHALES, CLAYSTONES, SILTSTONES, WEATHERED SANDSTONES, WEATHERED SCHIST AND WEATHERED GNEISS.

D. TRANSITIONAL MATERIALS

THIS MATERIAL IS THAT MATERIAL COMPRISED OF A COMBINATION OF SOIL AND ROCK (MATERIALS A, B, AND C) OCCURRING IN EITHER NON-UNIFORM INTERBEDDED LAYERS OF THE ABOVE MATERIALS (I.E. SHALE MATERIAL WITH RELATIVELY THIN LAYERS OF SOLID ROCK SUCH AS HARD LIMESTONE) OR ERRATIC LOCALIZED CHANGES OF MATERIAL TYPES BOTH LATERALLY AND WITH DEPTH (SUCH AS A GEOLOGIC FORMATION RESULTING IN PINNACLED ROCK COLUMNS, FLOATING BOULDERS OR LENSES INTERCALATED WITH CLAY SOIL, A COMMON OCCURRENCE IN CERTAIN REGIONS OF TENNESSEE). FOR CONSTRUCTION PURPOSES, THIS MATERIAL MAY HAVE TO BE EXCAVATED USING A COMBINATION OF EXCAVATION METHODS SUCH AS BLASTING OF ROCK PINNACLES, LAYERS OR BOULDERS ALONG WITH A RIPPING OF WEATHERED ROCK AND EXCAVATING OF SOIL WITH TRACK HOES OR LOADERS ALL WITHIN A LOCALIZED AREA. THIS MATERIAL WOULD NOT BE SUITABLE FOR THE USE OF EXCAVATING PAN TYPE EQUIPMENT.

TABULATED GEOTECHNICAL QUANTITIES

	ITEM No.	DESCRIPTION	UNIT	QUANTITY
① ② ③	203-02.01	BORROW EXCAVATION (GRADED SOLID ROCK)	TON	523
① ② ③	740-10.04	GEOTEXTILE (TYPE IV)	S.Y.	407

FOOTNOTES:

① THIS ITEM, INCLUDING 152 TONS OF GSR AND 171 S.Y. OF TYPE IV GEOTEXTILE TO BE USED APPROXIMATELY BETWEEN S.R. 107 (UNICOI DR.) STA. 208+85 TO STA. 210+30 OR OTHERWISE AS DIRECTED BY ENGINEER FOR STABILIZATION OF SUBGRADE.

② THIS ITEM, INCLUDING 371 TONS OF GSR AND 236 S.Y. OF TYPE IV GEOTEXTILE TO BE USED APPROXIMATELY BETWEEN S.R. 107 (UNICOI DR.) STA. 211+26 TO STA. 211+97 OR OTHERWISE AS DIRECTED BY ENGINEER FOR STABILIZATION OF SUBGRADE.

③ FOR BIDDING PURPOSES, THESE QUANTITIES ARE INCLUDED IN THE SHEET 2 SERIES (ESTIMATED ROADWAY QUATIITIES).

NOTES:

GRADED SOLID ROCK (GSR) PADS WILL BE REQUIRED:
* S.R. 107 (UNICOI DR.) STA. 208+85 TO 210+30
* S.R. 107 (UNICOI DR.) STA. 211+26 TO 211+97

SEALED BY

LORI ANN FIORENTINO
REGISTERED ENGINEER
AGRICULTURE
COMM RC
STATE OF TENNESSEE
Lori Ann Fiorentino
11/14/2024

STATE OF TENNESSEE
DEPARTMENT OF TRANSPORTATION

GEOTECHNICAL
NOTES & ESTIMATED QUANTITIES

$$$$SYTIME$$$$$$$$
$$$$DGNSPEC$$$$$$$$

TYPE	YEAR	PROJECT NO.	SHEET NO.
PS&E	2025	BR-STP-107(28)	G-3

N

210

215

300

APPROXIMATE PIPE LOCATION

86006-3235-94
BEGIN PROJ. BR-STP-107(28)
STA. 207+75.00 (CONST.)

STA. 214+20.00 SR 107(UNICOI DR.) =
STA. 214+20.00 SR 173(ERWIN HWY) =
STA. 300+00.00 SR 107

86006-3235-94
END PROJ. BR-STP-107(28)
STA. 216+50.00 (CONST.)

APPROXIMATE LOCATION OF A ROCK PAD OF BORROW EXCAVATION (GRADED SOLID ROCK) TON (ITEM NO. 203-02.01) CONSTRUCTED UP TO EL. 1920 OVERLAIN WITH A LAYER OF GEOTEXTILE (TYPE IV)(STABILIZATIONS) (ITEM NO. 740-10.04)

APPROXIMATE LOCATION OF A ROCK PAD OF BORROW EXCAVATION (GRADED SOLID ROCK) TON (ITEM NO. 203-02.01) CONSTRUCTED UP TO EL. 1920 OVERLAIN WITH A LAYER OF GEOTEXTILE (TYPE IV)(STABILIZATIONS) (ITEM NO. 740-10.04)

STR-1
NORTH INDIAN CK.

STR-1
NORTH INDIAN CREEK

STR-2

18" RCP

S.R. 107 (UNICOI DR.)

S.R. 173 (ERWIN HWY)

S.R. 107

WASHINGTON ST.

SCIOTO CREEK

SEALED BY

LORI ANN FIORENTINO
REGISTERED ENGINEER
AGRICULTURE
COMM. REG.
STATE OF TENNESSEE

Lori Ann Fiorentino

11/14/2024

COORDINATES ARE NAD 83(1995), ARE DATUM ADJUSTED BY THE FACTOR OF 1.00012 AND TIED TO THE TGRN. ALL ELEVATIONS ARE REFERENCED TO THE NAVD 1988 WITH GEOID 12B.

STATE OF TENNESSEE
DEPARTMENT OF TRANSPORTATION

GEOTECHNICAL
LAYOUT

STA. 207+75 TO STA. 216+50
SCALE: 1" = 50'

$$$$$SYTIME$$$$$$$
$$$$DGNSPEC$$$$$$$

TYPE	YEAR	PROJECT NO.	SHEET NO.
PS&E	2025	BR-STP-107(28)	G-4

REPRESENTATIVE TYPICAL SECTION OF S.R. 107 (UNICOI DR.) STATION 211+26 TO STATION 211+97

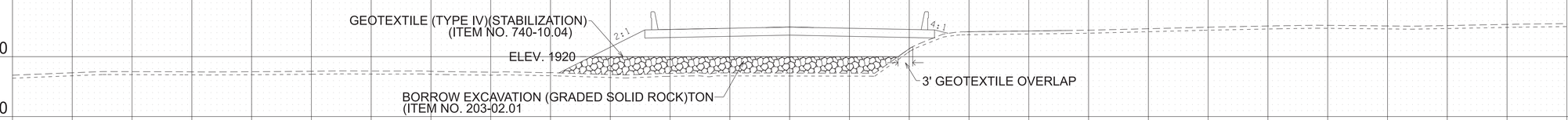

REPRESENTATIVE TYPICAL SECTION OF S.R. 107 (UNICOI DR.) STATION 208+85 TO STATION 210+30

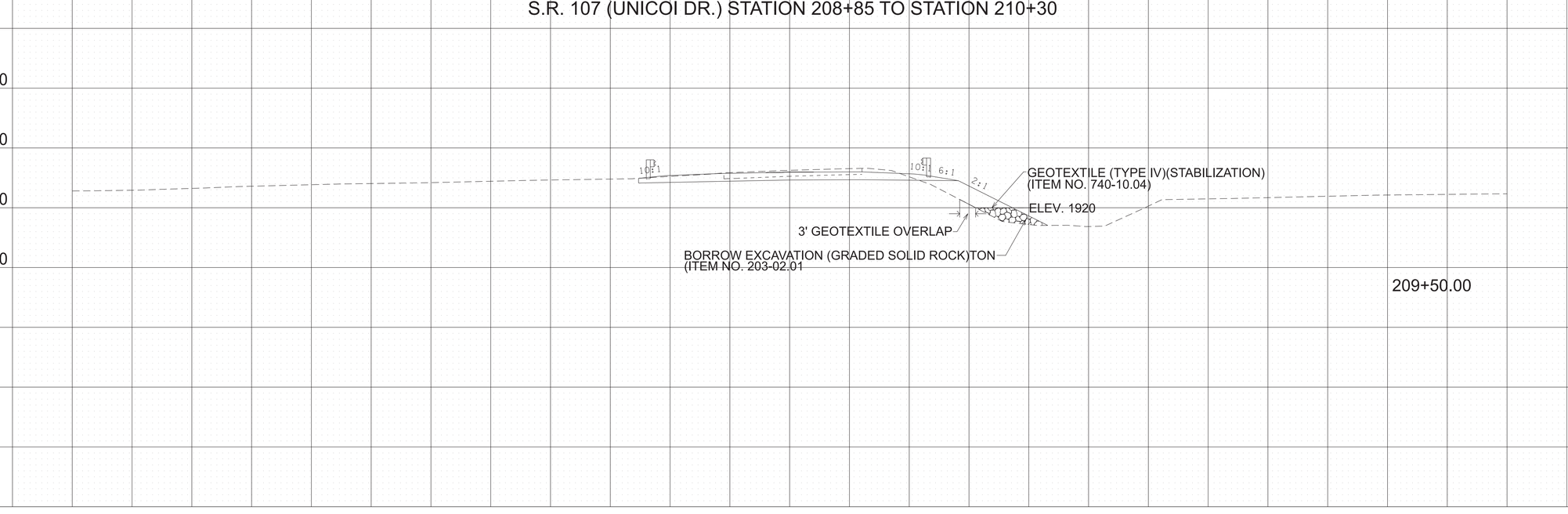

SEALED BY

LORI ANN FIORENTINO
REGISTERED ENGINEER
AGRICULTURE
COMM. IRC
STATE OF TENNESSEE
11/14/2024

STATE OF TENNESSEE
DEPARTMENT OF TRANSPORTATION

GEOTECHNICAL
TYPICAL SECTIONS

CELL GRDSHT
$$$$$SYTIME$$$$$$$
$$$$DGNSPEC$$$$$$$

TENNESSEE D.O.T. | DESIGN DIVISION | FILE NO.

TYPE	YEAR	PROJECT NO.	SHEET NO.
PSE	2024	BR-STP-107 (28)	S-1

SWPPP INDEX OF SHEETS

DESCRIPTION	SHT.
1. SWPPP REQUIREMENTS (5.0.)	1
2. SITE DESCRIPTION (5.5.1.)	1
3. ORDER OF CONSTRUCTION ACTIVITIES (5.5.1.a)	1
4. STREAM, OUTFALL, WETLAND, TMDL AND ECOLOGY INFORMATION	1-2
5. EROSION PREVENTION AND SEDIMENT CONTROL (EPSC) MEASURES (5.5.3.)	2-3
6. FLOCCULANTS (3.5.3.1.b)	3
7. UTILITY RELOCATION	3-4
8. MAINTENANCE AND INSPECTION	4
9. SITE ASSESSMENTS (5.5.3.8.)	4
10. STORMWATER MANAGEMENT (5.5.3.11.h)	4-5
11. NON-STORMWATER DISCHARGES (5.5.3.12.)	5
12. SPILL PREVENTION, MANAGEMENT AND NOTIFICATION (5.5.3.7.c, 6.1)	5-6
13. RECORD-KEEPING	5-7
14. SITE WIDE/PRIMARY PERMITTEE CERTIFICATION (8.7.5.)	7
15. SECONDARY PERMITTEE (OPERATOR) CERTIFICATION (8.7.6.)	7
16. ENVIRONMENTAL PERMITS (1.5.2.)	7
17. OUTFALL TABLE (5.5.1.c, 6.4.1.e, 6.4.1.f)	8

NOTE: CITATIONS IN PARENTHESIS INDICATE SECTIONS OF THE CURRENT CGP.

1. SWPPP REQUIREMENTS (5.0.)

1.1. HAS THE SWPPP TEMPLATE BEEN PREPARED BY AN INDIVIDUAL THAT HAS THE FOLLOWING LICENSING AND/OR CERTIFICATIONS (5.2)?

☒ YES (CHECK ALL THAT APPLY BELOW) OR ☐ NO

- ☐ CERTIFIED PROFESSIONAL IN EROSION AND SEDIMENT CONTROL (CPESC)
- ☒ A TN LICENSED PROFESSIONAL ENGINEER OR LANDSCAPE ARCHITECT
- ☒ HAS SUCCESSFULLY COMPLETED TDEC LEVEL II COURSE

1.2. DO THE EPSC PLANS INVOLVE STRUCTURAL DESIGN, HYDRAULIC, HYDROLOGIC OR OTHER ENGINEERING CALCULATIONS FOR EPSC STRUCTURAL MEASURES (E.G. SEDIMENT BASINS) (5.2.)? YES ☐ NO ☒

IF YES, HAVE THE EPSC PLANS BEEN PREPARED, STAMPED AND CERTIFIED BY A TN LICENSED PROFESSIONAL ENGINEER OR LANDSCAPE ARCHITECT? ☐ YES ☐ NO

1.3. DO THE PROJECT STORMWATER OUTFALLS DISCHARGE INTO THE FOLLOWING (6.4.1.)? ☐ YES (CHECK ALL THAT APPLY BELOW) ☒ NO

- ☐ WATERS WITH UNAVAILABLE PARAMETERS (303d FOR SILTATION)
- ☐ EXCEPTIONAL TENNESSEE WATERS (ETW)

2. SITE DESCRIPTION (5.5.1.)

2.1. PROJECT LIMITS (5.5.1.f): REFER TO TITLE SHEET

2.2. TOTAL PROJECT AREA (5.5.1.b): 2.193 ACRES

2.3. TOTAL AREA TO BE DISTURBED (5.5.1.b): 1.977 ACRES

2.4. PROJECT DESCRIPTION (5.5.1.a):

TITLE: SR-107; (Unicoi Drive), Bridge over North Indian Creek, LM 5.22 in Erwin.
COUNTY: Unicoi
PIN: 124631.00

2.5. SITE MAP(S) (3.2.2.): REFER TO TITLE SHEET

2.6. DESCRIPTION OF EXISTING SITE TOPOGRAPHY (5.5.1.c): REFER TO EXISTING CONTOURS SHEET(S) 10, DRAINAGE MAP SHEET(S) 7, USGS QUAD MAP, AND THE OUTFALL TABLE IN SECTION 4.2.

2.7. MAJOR SOIL DISTURBING ACTIVITIES (5.5.1.a) (CHECK ALL THAT APPLY):

- ☒ CLEARING AND GRUBBING
- ☒ EXCAVATION
- ☒ CUTTING AND FILLING
- ☒ FINAL GRADING AND SHAPING
- ☒ UTILITIES
- ☐ OTHER (DESCRIBE): _____

2.8. NO MORE THAN 50 ACRES OF ACTIVE SOIL DISTURBANCE IS ALLOWED AT ANY TIME DURING THE CONSTRUCTION OF THE PROJECT.

2.9. ARE THERE ANY SEASONAL LIMITATIONS ON WORK? ☐ YES ☒ NO

IF YES, LIST THE CORRESPONDING PLAN SHEET: _____

2.10. WAS ROW FINALIZED PRIOR TO FEBRUARY 1, 2010 (4.1.2.2)?

☐ YES _____ (DATE) ☒ NO

IF ROW WAS FINALIZED PRIOR TO FEBRUARY 1, 2010, THIS PROJECT IS CONSIDERED A PRE-APPROVED SITE (4.1.2.2)

2.11. SOIL PROPERTIES (5.5.1.d, 5.5.3.3.d, 5.5.3.6.b).

SOIL PROPERTIES FOR THE PRIMARY SOILS ARE LISTED IN THE TABLE BELOW.

SOIL PROPERTIES			
PRIMARY SOIL NAME	**HSG**	**% OF SITE**	**ERODIBILITY (k value)**
Mv – Maymead variant very stony loam, 1 to 10 percent slopes	A	19.0	.10
ShC – Shouns loam, 5 to 12 percent slopes	B	81.0	.32

2.12. IS ACID PRODUCING ROCK (APR) (i.e. PYRITE) LOCATED WITHIN THE PROJECT LIMITS? ☐ YES ☒ NO

2.12.1. IF YES TO SECTION 2.13, HAVE APR LOCATIONS BEEN IDENTIFIED WITHIN THE CONSTRUCTION PLANS AND/OR THE GEOTECHNICAL REPORT? ☐ YES ☐ NO; AND

2.12.2. IF YES TO SECTION 2.12.1, HAS A SPECIAL HANDLING PLAN AND/OR ADAPTIVE MANAGEMENT PLAN (AMP) BEEN PREPARED FOR THE PROJECT? ☐YES ☐ NO ☐ N/A (TDOT SP107L WILL BE APPLIED.)

2.13. PROJECT RUNOFF COEFFICIENTS AND AREA PERCENTAGES (5.5.3.6.a).

RUNOFF COEFFICIENTS FOR EXISTING CONDITIONS				
AREA TYPE	**AREA(AC)**	**PERCENTAGE OF TOTAL AREA (%)**	**RUNOFF CN**	**C FACTOR**
IMPERVIOUS	1.200	54.7	98	
PERVIOUS	0.993	45.3	80	
WEIGHTED CURVE NUMBER OR C-FACTOR =			89.8	

RUNOFF COEFFICIENTS FOR POST-CONSTRUCTION CONDITIONS				
AREA TYPE	**AREA(AC)**	**PERCENTAGE OF TOTAL AREA (%)**	**RUNOFF CN**	**C FACTOR**
IMPERVIOUS	1.250	57.0	98	
PERVIOUS	0.943	43.0	80	
WEIGHTED CURVE NUMBER OR C-FACTOR =			90.3	

3. ORDER OF CONSTRUCTION ACTIVITIES (5.5.1.a)

CONSTRUCTION SHALL BE SEQUENCED AND STAGED TO: MINIMIZE THE EXPOSURE TIME OF GRADED OR DENUDED SOIL AREAS, PRESERVE TOPSOIL, AND MINIMIZE SOIL COMPACTION. NO WORK SHALL BE STARTED UNTIL THE CONTRACTOR'S PLAN FOR THE STAGING OF THEIR OPERATIONS, INCLUDING THE PLAN FOR STAGING OF TEMPORARY AND PERMANENT EPSC MEASURES, HAS BEEN ACCEPTED BY THE ENGINEER. THE CONTRACTOR'S EPSC PLAN SHALL INCORPORATE AND SUPPLEMENT, AS ACCEPTABLE, THE ORDER OF CONSTRUCTION ACTIVITIES AND THE BASIC EPSC DEVICES DEPICTED ON THE EPSC PLAN CONTAINED WITHIN THE APPROVED SWPPP.

3.1. SPECIAL SEQUENCING REQUIREMENTS (SEE SHEETS _____)

3.2. INSTALL STABILIZED CONSTRUCTION EXITS.

3.3. INSTALL PERIMETER PROTECTION WHERE RUNOFF SHEET FLOWS FROM THE SITE.

3.4. INSTALL INITIAL EPSC MEASURES BEFORE CLEARING, GRUBBING, EXCAVATION, GRADING, CULVERT OR BRIDGE CONSTRUCTION, CUTTING, FILLING, OR ANY OTHER EARTHWORK OCCURS, EXCEPT AS SUCH WORK MAY BE NECESSARY TO INSTALL EPSC MEASURES.

3.5. PERFORM CLEARING AND GRUBBING (NOT MORE THAN TWO WEEKS PRIOR TO GRADING OR EARTH-MOVING. REFER TO THE STABILIZATION PRACTICES BELOW.).

3.6. REMOVE AND STORE TOPSOIL.

3.7. STABILIZE DISTURBED AREAS WITHIN 2 WEEKS OF COMPLETING ANY STAGE AND/OR PHASE OF ACTIVITY (STEEP SLOPES SHALL BE STABILIZED WITHIN 1 WEEK AFTER CONSTRUCTION ACTIVITY HAS TEMPORARY OR PERMANENTLY CEASED).

3.8. INSTALL UTILITIES, STORM SEWERS, CULVERTS AND BRIDGE STRUCTURES.

3.9. INSTALL INLET AND CULVERT PROTECTION ONCE STRUCTURES ARE IN PLACE AND CAPABLE OF INTERCEPTING FLOW.

3.10. PERFORM FINAL GRADING AND INSTALL BASE STONE.

3.11. COMPLETE FINAL PAVING AND SEALING OF CONCRETE.

3.12. INSTALL TRAFFIC CONTROL AND PROTECTION DEVICES.

3.13. COMPLETE PERMANENT STABILIZATION (TOPSOIL, SEEDING, MULCH, EROSION CONTROL BLANKET, SOD, ETC.)

3.14. REMOVE TEMPORARY EROSION CONTROLS AND ACCUMULATED SEDIMENT FROM AREAS THAT HAVE ESTABLISHED AT LEAST 70 PERCENT UNIFORM PERMANENT VEGETATIVE COVER.

3.15. RE-STABILIZE AREAS DISTURBED BY REMOVAL ACTIVITIES.

4. STREAM, OUTFALL, WETLAND, TMDL AND ECOLOGY INFORMATION

4.1. STREAM INFORMATION (5.5.1.h, 5.5.1.i)

4.1.1. WILL CONSTRUCTION AND/OR EROSION PREVENTION AND SEDIMENT CONTROLS IMPACT ANY STREAMS WITHIN THE PROJECT LIMITS? ☒ YES ☐ NO

IF YES, THE IMPACT(S) HAVE BEEN INCLUDED IN THE TOTAL PROJECT IMPACTS AND HAVE BEEN INCLUDED IN THE WATER QUALITY PERMITS.

4.1.2. HAVE ANY OF THE RECEIVING STATE WATERS LESS THAN OR EQUAL TO 1 FLOW MILE DOWN GRADIENT OF THE PROJECT LIMITS BEEN CLASSIFIED BY TDEC AS FOLLOWS (CHECK ALL THAT APPLY):

- ☐ 303d WITH UNAVAILABLE PARAMETERS FOR SILTATION
- ☒ EXCEPTIONAL TENNESSEE WATERS (ETW)

4.1.3. RECEIVING WATERS OF THE STATE (5.5.1.h, 5.5.1.j, 5.5.1.k).

RECEIVING WATERS OF THE STATE INFORMATION					
TDOT STATE WATER LABEL FROM EBR	**NAME OF RECEIVING STATE WATER**	**303d WITH UNAVAILABLE PARAMETERS FOR SILTATION (YES OR NO)**	**ETW (YES OR NO)**	**LOCATED WITHIN PROJECT LIMITS (YES OR NO)**	**LOCATED WITHIN ≤ 1 FLOW MILE DOWN GRADIENT OF PROJECT LIMITS (YES OR NO)**
STR-1	North Indian Creek	NO	YES	YES	YES
STR-2	N/A	NO	NO	YES	YES

4.1.4. RECEIVING WATERS OF THE US (NON STATE WATERS) (4.1.2). LIST ANY FEATURE THAT IS IDENTIFIED AS A WET WEATHER CONVEYANCE (TDEC) AND IDENTIFIED AS WATERS OF THE US BY THE ARMY CORPS OF ENGINEERS.

WET WEATHER CONVEYANCES THAT ARE WATERS OF THE US		
TDOT STATE WATER LABEL FROM EBR	**LOCATED WITHIN PROJECT LIMITS (YES OR NO)**	**LOCATED WITHIN ≤ 1 FLOW MILE DOWN GRADIENT OF PROJECT LIMITS (YES OR NO)**

STATE OF TENNESSEE
DEPARTMENT OF TRANSPORTATION

STORMWATER POLLUTION PREVENTION PLAN

TENNESSEE D.O.T.	DESIGN DIVISION	FILE NO.

TYPE	YEAR	PROJECT NO.	SHEET NO.
PSE	2024	BR-STP-107(28)	S-2

4.1.5. ARE THERE ANY WATER QUALITY RIPARIAN BUFFER ZONES REQUIRED FOR WATERS OF THE STATE? (5.5.1.l, 6.4.2.)

☐ YES ☒ NO

BUFFER ZONE REQUIREMENTS ARE NOT REQUIRED FOR PRE-APPROVED SITES (4.1.2.2.)

IF YES, THEY HAVE BEEN INCLUDED ON PLAN SHEET(S) _____.

IF YES, CHECK THE APPROPRIATE BOX BELOW FOR SIZE OF BUFFER.

☐ 60-FEET FOR WATERS WITH UNAVAILABLE PARAMETERS AND EXCEPTIONAL TENNESSEE WATERS (ETW) (AVERAGE WIDTH PER SIDE WITH A MINIMUM OF 30-FEET).

A 60 FOOT NATURAL WATER QUALITY RIPARIAN BUFFER ZONE ADJACENT TO AND ON BOTH SIDES OF THE RECEIVING STATE STREAM WITH THIS DESIGNATION SHALL BE PRESERVED TO THE MAXIMUM EXTENT PRACTICABLE DURING CONSTRUCTION ACTIVITIES AT THE SITE. THE 60 FOOT CRITERION FOR THE WIDTH OF THE BUFFER ZONE CAN BE ESTABLISHED ON AN AVERAGE WIDTH BASIS AT A PROJECT, AS LONG AS THE MINIMUM WIDTH OF THE BUFFER ZONE IS MORE THAN 30 FEET AT ANY MEASURED LOCATION. IF THE CONSTRUCTION SITE ENCOMPASSES BOTH SIDES OF A STREAM, BUFFER AVERAGING CAN BE APPLIED TO BOTH SIDES, BUT MUST BE APPLIED INDEPENDENTLY.

☐ 30-FEET FOR ALL OTHER STREAMS (AVERAGE WIDTH PER SIDE WITH A MINIMUM OF 15-FEET).

A 30 FOOT NATURAL WATER QUALITY RIPARIAN BUFFER ZONE ADJACENT TO AND ON BOTH SIDES OF THE RECEIVING STATE STREAM SHALL BE PRESERVED TO THE MAXIMUM EXTENT PRACTICABLE DURING CONSTRUCTION ACTIVITIES AT THE SITE. THE 30 FOOT CRITERION FOR THE WIDTH OF THE BUFFER ZONE CAN BE ESTABLISHED ON AN AVERAGE WIDTH BASIS AT A PROJECT, AS LONG AS THE MINIMUM WIDTH OF THE BUFFER ZONE IS MORE THAN 15 FEET AT ANY MEASURED LOCATION. IF THE CONSTRUCTION SITE ENCOMPASSES BOTH SIDES OF A STREAM, BUFFER AVERAGING CAN BE APPLIED TO BOTH SIDES, BUT MUST BE APPLIED INDEPENDENTLY.

☐ 15-FEET FOR ANY WET WEATHER CONVEYANCES IDENTIFIED AS WATERS OF THE US BY THE US ARMY CORPS OF ENGINEERS.

4.1.6. ARE THERE ANY WATER QUALITY RIPARIAN BUFFER ZONES NOT REQUIRED FOR STATE WATERS DUE TO A TDEC ARAP? (1.5.2.)

☐ YES ☒ NO

4.1.7. ARE THERE WATER QUALITY RIPARIAN BUFFER ZONE EXEMPTIONS? (4.1.2.1.) ☐ YES ☒ NO

IF YES, EXISTING CONDITIONS DESCRIPTION:_____

4.1.8. EVERY ATTEMPT SHOULD BE MADE FOR CONSTRUCTION ACTIVITIES TO NOT TAKE PLACE WITHIN THE WATER QUALITY RIPARIAN BUFFER ZONE AND FOR EXISTING FORESTED AREAS TO BE PRESERVED. (4.1.2., 6.4.2.)

4.1.9. BECAUSE OF HEAVY SEDIMENT LOAD ASSOCIATED WITH CONSTRUCTION SITE RUNOFF, WATER QUALITY RIPARIAN BUFFER ZONES ARE NOT SEDIMENT CONTROL MEASURES AND SHOULD NOT BE RELIED UPON AS PRIMARY SEDIMENT CONTROL MEASURES. THE WATER QUALITY RIPARIAN BUFFER ZONE SHALL BE ESTABLISHED BETWEEN THE TOP OF THE STREAM BANK AND THE DISTURBED CONSTRUCTION AREA.

4.1.10. WHERE IT IS NOT PRACTICABLE TO MAINTAIN A FULL WATER QUALITY RIPARIAN BUFFER, BEST MANAGEMENT PRACTICES (BMPS) PROVIDING EQUIVALENT PROTECTION AS THE NATURAL RIPARIAN ZONE MUST BE USED. A JUSTIFICATION FOR USE AND DESIGN EQUIVALENCY SHALL BE DOCUMENTED WITHIN THE SWPPP. THE ENVIRONMENTAL AND ROADWAY DESIGN DIVISIONS SHALL REVIEW AND APPROVE THIS REVISION OF THE SWPPP BEFORE DISTURBANCE OF THE SITE PROCEEDS, UNLESS PREVIOUSLY EXEMPT IN THE NPDES CGP. WHERE ISSUED, ARAP/401 REQUIREMENTS WILL PREVAIL IF IN CONFLICT WITH THESE BUFFER ZONE REQUIREMENTS.

4.2. OUTFALL INFORMATION

4.2.1. OUTFALL TABLE (5.5.1.c). SEE SWPPP SHEET S-8 FOR OUTFALL INFORMATION.

4.2.2. HAVE ALL OUTFALLS BEEN LABELED ON THE EPSC PLAN SHEETS (5.5.1.f)? ☒ YES ☐ NO

4.2.3. HAVE ALL OUTFALLS BEEN LABELED ON A USGS TOPOGRAPHIC MAP INCLUDED IN THE "DOCUMENTATION AND PERMITS" BINDER (3.2.2.)? ☒YES ☐ NO

4.2.4. WHERE POSSIBLE, HAS NON-PROJECT RUN-ON BEEN DIVERTED AROUND OR THROUGH THE PROJECT TO ELIMINATE CONTACT WITH DISTURBED AREAS OF THE PROJECT AND SEPARATE IT FROM PROJECT RUN-OFF THEREBY REDUCING THE DRAINAGE AREA OF TO THE OUTFALLS IN THIS AREA?

☐ YES ☐ NO ☒ N/A

4.2.5. ARE EQUIVALENT MEASURES BEING SUBSTITUTED FOR A SEDIMENT BASIN(S) OR SEDIMENT TRAP(S)? (5.5.3.5.)

☐ YES ☐ NO ☒ N/A

4.2.6. A SEDIMENT BASIN, OR EQUIVALENT MEASURE(S) WILL BE PROVIDED FOR ANY OUTFALL IN A DRAINAGE AREA:

OF TEN ACRES OR MORE FOR AN OUTFALL(S) THAT DOES NOT DISCHARGE TO A STATE STREAM WITH UNAVAILABLE PARAMETERS OR EXCEPTIONAL TENNESSEE WATERS (ETW). A TEMPORARY (OR PERMANENT) SEDIMENT BASIN OR EQUIVALENT CONTROL MEASURES THAT PROVIDES STORAGE FOR A CALCULATED VOLUME OF RUNOFF FROM A MINIMUM 2-YEAR/ 24-HOUR STORM EVENT, SHALL BE PROVIDED UNTIL PERMANENT STABILIZATION OF THE SITE. (5.5.3.5)

OR

OF FIVE ACRES OR MORE FOR AN OUTFALL(S) THAT DISCHARGES TO A STATE STREAM WITH UNAVAILABLE PARAMETERS OR EXCEPTIONAL TENNESSEE WATERS (ETW). A TEMPORARY (OR PERMANENT) SEDIMENT BASIN THAT PROVIDES STORAGE FOR A CALCULATED VOLUME OF RUNOFF FROM A 5-YEAR/ 24-HOUR STORM EVENT AND RUNOFF FROM EACH ACRE DRAINED, OR EQUIVALENT CONTROL MEASURES, SHALL BE PROVIDED UNTIL PERMANENT STABILIZATION OF THE SITE. (6.4.1.e).

ALL CALCULATIONS RELATED TO DRAINAGE AREAS, RUNOFF COEFFICIENTS, BASIN VOLUMES AND EQUIVALENT CONTROL MEASURES MUST BE PROVIDED IN THE SWPPP (5.5.3.5.)

4.2.7. A SEDIMENT TRAP, OR EQUIVALENT MEASURE(S) WILL BE PROVIDED FOR ANY OUTFALL IN A DRAINAGE AREA:

OF 3.5 - 4.9 ACRES FOR AN OUTFALL(S) THAT DISCHARGES TO A STATE STREAM WITH UNAVAILABLE PARAMETERS (303d SILTATION) OR EXCEPTIONAL TENNESSEE WATERS (ETW). A SEDIMENT TRAP THAT PROVIDES STORAGE FOR A CALCULATED VOLUME OF RUNOFF FROM A 5-YEAR/24-HOUR STORM EVENT AND RUNOFF FROM EACH ACRE DRAINED, OR EQUIVALENT CONTROL MEASURES, SHALL BE PROVIDED UNTIL PERMANENT STABILIZATION OF THE SITE. (6.4.1.f).

IN BOTH INSTANCES, THE ENVIRONMENTAL AND ROADWAY DESIGN DIVISIONS MAY BE CONTACTED TO REVIEW AND CONCUR WITH ANY REVISION OF THE SWPPP BEFORE DISTURBANCE OF THE OUTFALL PROCEEDS.

4.2.8. SEDIMENT STRUCTURES TREATING DRAINAGE AREAS IN EXCESS OF 25 ACRES REQUIRE A SITE-SPECIFIC DESIGN THAT ACCURATELY DEFINES THE SITE HYDROLOGY, SITE-SPECIFIC SEDIMENT LOADING, HYDRAULICS OF THE SITE, AND ADHERES TO ALL TENNESSEE EROSION AND SEDIMENT CONTROL HANDBOOK DESIGN RECOMMENDATIONS FOR SEDIMENT BASINS. (5.5.3.5.)

4.3. WETLAND INFORMATION

WILL CONSTRUCTION AND/OR EROSION AND SEDIMENT CONTROLS IMPACT ANY WETLANDS? ☐ YES ☒ NO

IF YES, THE STRUCTURAL EPSC MEASURES HAVE BEEN INCLUDED IN THE TOTAL PROJECT IMPACTS AND IN THE WATER QUALITY PERMITS.

WETLAND INFORMATION				
TDOT WETLAND LABEL	FROM STATION LT OR RT	TO STATION LT OR RT	TEMPORARY IMPACTS (AC)	PERMANENT IMPACTS (AC)

4.4. TOTAL MAXIMUM DAILY LOADS (TMDL) INFORMATION (1.3.j)

4.4.1. IS THIS PROJECT LOCATED IN A HUC-8 WATERSHED THAT MAINTAINS AN EPA APPROVED TMDL FOR SILTATION AND HABITAT ALTERATION?

☐YES ☒ NO

4.4.2. IF YES, IS THIS PROJECT LOCATED WITHIN A HUC-12 SUBWATERSHED WITH A WASTE LOAD ALLOCATION (WLA)?

☐ YES ☐ NO

4.4.3. IF YES, DOES THE PROJECT HAVE A DIRECT DISCHARGE TO A 303(d) LISTED STREAM FOR SILTATION?

☐ YES ☐ NO

IF YES, SWPPP INCORPORATES MEASURES OR CONTROLS CONSISTENT WITH THE ASSUMPTIONS AND REQUIREMENTS OF THE TMDL.

4.5. ECOLOGY INFORMATION (3.5.5.e)

DOES THE TDOT ENVIRONMENTAL BOUNDARIES REPORT SPECIFY SPECIAL NOTES TO BE ADDED TO THE PLAN SHEETS?

☐ YES ☒ NO

IF YES, THEY HAVE BEEN INCLUDED ON PLAN SHEET(S) _____.

4.6. ENVIRONMENTAL COMMITMENTS

ARE THERE ANY NOTES ON THE ENVIRONMENTAL COMMITMENT SHEET?

☒ YES ☐ NO

IF YES, THEY HAVE BEEN INCLUDED ON PLAN SHEET(S) 1B.

5. EROSION PREVENTION AND SEDIMENT CONTROL (EPSC) MEASURES (5.5.3.)

5.1. EPSC MEASURES MUST BE DESIGNED, INSTALLED AND MAINTAINED TO CONTROL STORMWATER VOLUME AND VELOCITY WITHIN THE SITE TO MINIMIZE EROSION (4.1.1).

5.2. EPSC MEASURES MUST CONTROL STORMWATER DISCHARGES, INCLUDING BOTH PEAK FLOWS AND TOTAL STORMWATER VOLUME, TO MINIMIZE EROSION AT OUTLETS, STREAM CHANNELS, AND STREAM BANKS. (4.1.1)

5.3. HAVE THE CONTROL MEASURES BEEN DESIGNED PER THE SIZE AND SLOPE OF THE DISTURBED DRAINAGE AREA (5.5.3.5.)?

☒YES ☐ NO

5.4. THE CONTROL MEASURES HAVE, AT A MINIMUM, BEEN DESIGNED FOR THE 2-YEAR, 24 HOUR STORM EVENT (5.5.3.5., 6.4.1.b).

5.5. ARE THE LIMITS OF DISTURBANCE CLEARLY MARKED ON THE EPSC PLANS (5.5.1.f)? ☒ YES ☐ NO

5.6. AREAS TO BE UNDISTURBED SHALL BE CLEARLY MARKED IN THE FIELD BEFORE CONSTRUCTION ACTIVITIES BEGIN.

5.7. UNLESS OTHERWISE NOTED IN THE PLANS, THE CONTRACTOR SHALL NOT CLEAR/DISTURB ANY AREA BEYOND 15 FEET FROM SLOPE LINES OR ROW/ EASEMENT LINE, WHICHEVER IS LESSER.

5.8. CLEARING, GRUBBING, AND OTHER DISTURBANCE TO RIPARIAN VEGETATION SHALL BE LIMITED TO THE MINIMUM NECESSARY FOR SLOPE CONSTRUCTION AND EQUIPMENT OPERATIONS. EXISTING VEGETATION, INCLUDING STREAM AND WETLAND BUFFERS (UNLESS PERMITTED), SHOULD BE PRESERVED TO THE MAXIMUM EXTENT POSSIBLE. UNNECESSARY VEGETATION REMOVAL IS PROHIBITED.

5.9. HAS A THREE STAGED EPSC PLAN BEEN PREPARED FOR THE PROJECT (5.5.2.)?

YES ☒ NO ☐

PLEASE NOTE THAT A THREE STAGED EPSC PLAN IS REQUIRED FOR ALL TDOT PROJECTS FOR WHICH AN NPDES PERMIT IS REQUIRED.

5.10. STEEP SLOPES ARE DEFINED AS A NATURAL OR CREATED SLOPE OF 35% GRADE OR GREATER REGARDLESS OF HEIGHT. HAVE STEEP SLOPES BEEN MINIMALLY DISTURBED AND/OR PROTECTED BY CONVEYING RUNOFF NON-EROSIVELY AROUND OR OVER THE SLOPE (5.5.3.4.) (10. "STEEP SLOPE")? ☐ YES ☐ NO ☒ N/A

5.11. THE STRUCTURAL EPSC MEASURES HAVE BEEN INCLUDED IN THE TOTAL PROJECT IMPACTS AND HAVE BEEN INCLUDED IN THE AQUATIC RESOURCE ALTERATION (ARAP) PERMIT OR SECTION 401 CERTIFICATION (5.5.1.h). REFER TO THE LIST OF APPLICABLE ENVIRONMENTAL PERMITS LOCATED ON SWPPP SHEET N/A. ALL PERMITS WILL BE MAINTAINED ON SITE WITHIN THE "DOCUMENTATION AND PERMITS" BINDER.

STATE OF TENNESSEE
DEPARTMENT OF TRANSPORTATION

STORMWATER POLLUTION PREVENTION PLAN

TENNESSEE D.O.T.	DESIGN DIVISION	FILE NO.

TYPE	YEAR	PROJECT NO.	SHEET NO.
PSE	2024	BR-STP-107(28)	S-3

5.12. THE EPSC CONTROL MEASURES LISTED IN THE QUANTITIES TABLE ON SHEET 26 HAVE BEEN SELECTED IN ACCORDANCE WITH TDOT STANDARD DRAWINGS AND GOOD ENGINEERING PRACTICES (5.1., 5.5.3.1.b, 5.5.3.5.).

5.13. EPSC MEASURES SHALL BE INSTALLED PER TDOT STANDARDS (i.e. STANDARD DRAWINGS) AND SHALL BE FUNCTIONAL PRIOR TO ANY EARTH MOVING OPERATIONS.

5.14. EPSC MEASURES WILL NOT BE INSTALLED WITHIN A STREAM WITHOUT FIRST OBTAINING APPROVAL FROM THE PERMITS SECTION.

5.15. TEMPORARY EPSC MEASURES MAY BE REMOVED AT THE BEGINNING OF THE WORKDAY, BUT MUST BE REINSTALLED AT THE END OF THE WORKDAY OR BEFORE A PRECIPITATION EVENT.

5.16. EPSC MEASURES LOCATED IN WOTUS (EPHEMERAL STREAMS) MUST BE CONSIDERED TEMPORARY AND SHALL BE REMOVED AT THE END OF CONSTRUCTION.

5.17. THE CONTRACTOR SHALL ESTABLISH AND MAINTAIN A PROACTIVE METHOD TO PREVENT THE OFF-SITE MIGRATION OR DEPOSIT OF SEDIMENT OFF THE PROJECT LIMITS (E.G. R.O.W., EASEMENTS, ETC.), INTO WATERS OF THE STATE/U.S., OR ONTO ROADWAYS USED BY THE PUBLIC. IF SEDIMENT ESCAPES THE CONSTRUCTION SITE, OFF-SITE ACCUMULATIONS OF SEDIMENT THAT HAVE NOT REACHED A STREAM MUST BE REMOVED TO A LEVEL SUFFICIENT TO MINIMIZE OFF-SITE IMPACTS (E.G., FUGITIVE SEDIMENT THAT HAS ESCAPED THE CONSTRUCTION SITE AND HAS COLLECTED IN A STREET MUST BE REMOVED SO THAT IT IS NOT SUBSEQUENTLY WASHED INTO STORM SEWERS AND STREAMS BY THE NEXT RAIN AND/OR SO THAT IT DOES NOT POSE A SAFETY HAZARD TO USERS OF PUBLIC STREETS). ARRANGEMENTS CONCERNING REMOVAL OF SEDIMENT ON ADJOINING PROPERTY MUST BE SETTLED WITH THE ADJOINING PROPERTY OWNER BEFORE REMOVAL OF SEDIMENT. SEDIMENT THAT MIGRATES INTO WATERS OF THE STATE/US SHALL NOT BE REMOVED WITHOUT GUIDANCE FROM TDOT ENVIRONMENTAL PERSONNEL.

5.18. OFFSITE VEHICLE TRACKING OF SEDIMENTS AND THE GENERATION OF DUST SHALL BE MINIMIZED. A STABILIZED CONSTRUCTION EXIT (A POINT OF ENTRANCE/EXIT TO THE CONSTRUCTION PROJECT) SHALL BE PROVIDED TO REDUCE THE TRACKING OF MUD AND DIRT ONTO PUBLIC ROADS BY CONSTRUCTION VEHICLES.

5.19. THE QUANTITIES REQUIRED FOR STABILIZED CONSTRUCTION EXITS PER TDOT STANDARDS HAVE BEEN SPECIFIED ON SHEET 2 (5.5.3.1.j).

5.20. DISCHARGES FROM DEWATERING ACTIVITIES ARE PROHIBITED UNLESS MANAGED BY APPROPRIATE CONTROLS THAT PROVIDE THE LEVEL OF TREATMENT (FILTRATION) NECESSARY TO COMPLY WITH PERMIT REQUIREMENTS. (4.1.3.).

5.21. SETTLING BASINS AND SEDIMENT TRAPS SHALL BE PROPERLY DESIGNED PER THE SIZE OF THE DRAINAGE AREAS OR VOLUME OF WATER TO BE TREATED. TREATED WATER MUST BE DISCHARGED THROUGH A PIPE OR WELL VEGETATED OR LINED CHANNEL, SO THAT THE DISCHARGE DOES NOT CAUSE EROSION OR SEDIMENT TRANSPORT.

5.22. DISCHARGES FROM SEDIMENT BASINS AND IMPOUNDMENTS SHALL UTILIZE OUTLET STRUCTURES THAT ONLY WITHDRAW WATER FROM NEAR THE SURFACE OF THE BASIN OR IMPOUNDMENT. TREATED WATER MUST BE DISCHARGED THROUGH A PIPE, WELL- VEGETATED AND/OR LINED CHANNEL, SO THAT THE DISCHARGE DOES NOT CAUSE EROSION OR SEDIMENT TRANSPORT. (5.5.3.5.).

5.23. THE DEWATERING OF WORK AREAS, TRENCHES, FOUNDATIONS, EXCAVATIONS, ETC. THAT HAVE COLLECTED STORMWATER, WATER FROM VEHICLE WASH AREAS, OR GROUNDWATER SHALL BE EITHER HELD IN SETTLING BASINS OR TREATED BY FILTRATION AND/OR CHEMICAL TREATMENT PRIOR TO ITS DISCHARGE. ALL CHEMICAL TREATMENTS MUST BE APPLIED PER SECTION 6 FLOCCULANTS.

5.24. WATER DISCHARGED FROM DEWATERING ACTIVITIES SHALL NOT CAUSE AN OBJECTIONABLE COLOR CONTRAST WITHIN THE RECEIVING NATURAL RESOURCE. WATER MUST BE HELD WITHIN SETTLING BASINS UNTIL IT IS AT LEAST AS CLEAR AS THE RECEIVING WATERS.

5.25. DEWATERING STRUCTURES, SEDIMENT FILTER BAGS, SEDIMENT BASINS AND TRAPS SHALL NOT BE LOCATED CLOSER THAN 30 FEET (60 FEET DESIRABLE VEGETATIVE BUFFER) FOR WATERS WITH UNAVAILABLE PARAMETERS AND EXCEPTIONAL TENNESSEE WATERS (ETW) AND 15 FEET (30 FEET DESIRABLE VEGETATIVE BUFFER) FOR ALL OTHER FEATURES FROM THE TOP BANK OF A STREAM, WOTUS (EPHEMERAL), WETLAND OR OTHER NATURAL RESOURCE AND SHALL BE PROPERLY DESIGNED PER THE SIZE OF THE DRAINAGE AREAS OR VOLUME OF WATER TO BE TREATED.

5.26. STABILIZATION PRACTICES: PRE-CONSTRUCTION VEGETATIVE COVER WILL NOT BE DESTROYED, REMOVED OR DISTURBED MORE THAN 2 WEEKS PRIOR TO GRADING OR EARTH MOVING UNLESS THE AREA WILL BE SEEDED AND/OR MULCHED OR OTHER TEMPORARY COVER IS INSTALLED (5.5.3.5.f).

5.27. STABILIZATION MEASURES WILL BE INITIATED AS SOON AS POSSIBLE WHERE CONSTRUCTION ACTIVITIES HAVE TEMPORARILY OR PERMANENTLY CEASED. TEMPORARY OR PERMANENT STABILIZATION WILL BE COMPLETED WITHIN 2 WEEKS AFTER ACTIVITY HAS TEMPORARILY OR PERMANENTLY CEASED IN THAT AREA. PERMANENT STABILIZATION WILL REPLACE TEMPORARY MEASURES AS SOON AS PRACTICABLE (5.5.3.4.).

5.28. PRIORITY SHALL BE GIVEN TO FINISHING OPERATIONS AND PERMANENT EPSC MEASURES OVER TEMPORARY EPSC MEASURES ON ALL PROJECTS. UNPACKED GRAVEL CONTAINING FINES (SILT AND CLAY SIZED PARTICLES) OR CRUSHER-RUN WILL NOT BE CONSIDERED A NON-ERODIBLE SURFACE

5.29. DELAYING THE PLANTING OF COVER VEGETATION UNTIL WINTER MONTHS OR DRY MONTHS SHOULD BE AVOIDED, IF POSSIBLE.

5.30. STEEP SLOPES SHALL BE TEMPORARILY STABILIZED NOT LATER THAN 1 WEEK AFTER CONSTRUCTION ACTIVITY ON THE SLOPE HAS TEMPORARILY OR PERMANENTLY CEASED. (5.5.3.4.).

6. FLOCCULANTS (3.5.3.1.b)

IS ADDITIONAL PHYSICAL OR CHEMICAL TREATMENT OF STORMWATER RUNOFF NECESSARY (5.5.3.5.)? ☐ YES ☒ NO

IF YES, THE FOLLOWING NOTES APPLY:

6.1. ENSURE THE FLOCCULANT EMULSIONS AND POWDERS ARE OF THE ANIONIC TYPE (5.5.3.5.). AND MEET THE FOLLOWING REQUIREMENTS:

6.1.1. MEETS THE EPA AND FDA ACRYLAMIDE MONOMER LIMITS OF EQUAL TO OR GREATER THAN 0.005% ACRYLAMIDE MONOMER.

6.1.2. HAS A DENSITY OF 10% TO 55% BY WEIGHT AND A MOLECULAR WEIGHT OF 16 TO 24 MG/MOLE (MILLIGRAM PER MOLE).

6.1.3. MIXTURE IS NON-COMBUSTIBLE.

6.1.4. CONTAINS ONLY MANUFACTURER'S RECOMMENDED ADDITIVES.

6.2. FLOCCULANT SHALL BE MIXED AND APPLIED IN ACCORDANCE WITH ALL OCCUPATIONAL SAFETY AND HEALTH ADMINISTRATION (OSHA) MATERIAL SAFETY DATA SHEET REQUIREMENTS AND THE MANUFACTURER'S RECOMMENDATIONS FOR THE SPECIFIED USES CONFORMING TO ALL FEDERAL, STATE, AND LOCAL LAWS, RULES, AND REGULATIONS.

6.3. ALL VENDORS AND SUPPLIERS OF FLOCCULANT BLENDS SHALL PRESENT OR SUPPLY A WRITTEN TOXICITY REPORT WHICH VERIFIES ACCEPTABLE TOXICITY PARAMETERS WHICH MEET OR EXCEED THE EPS REQUIREMENTS FOR THE STATE AND FEDERAL WATER QUALITY STANDARDS. WHOLE EFFLUENT TESTING DOES NOT MEET THIS REQUIREMENT AS PRIMARY REACTIONS HAVE OCCURRED AND TOXIC POTENTIALS HAVE BEEN REDUCED. CATIONIC FORMS OF FLOCCULANTS ARE NOT ALLOWED UNDER THIS SECTION DUE TO HIGH LEVELS OF TOXICITY TO AQUATIC ORGANISMS. FLOCCULANT EMULSIONS SHALL NEVER BE APPLIED DIRECTLY TO STORMWATER RUNOFF OR RIPARIAN WATERS DUE TO SURFACTANT TOXICITY. THE CONTRACTOR MUST SEEK THE APPROVAL OF THE EPSC DESIGN ENGINEER AND TDOT IF CHITOSAN IS PROPOSED FOR THIS PROJECT.

6.4. ALL VENDORS AND SUPPLIERS OF FLOCCULANT BLENDS SHALL SUPPLY WRITTEN "SITE SPECIFIC" TESTING RESULTS DEMONSTRATING A PERFORMANCE OF 95% OR GREATER REDUCTION OF NTU OR TSS FROM STORMWATER DISCHARGES.

6.5. EMULSION BATCHES SHALL BE MIXED FOLLOWING RECOMMENDATIONS OF THE TESTING LABORATORY THAT DETERMINES THE PROPER PRODUCT AND RATE TO MEET SITE REQUIREMENTS. APPLICATION METHODS SHALL ENSURE UNIFORM COVERAGE TO THE TARGET AREA. EMULSIONS SHALL NEVER BE APPLIED DIRECTLY TO STORMWATER RUNOFF OR RIPARIAN BUFFERS.

6.6. FLOCCULANT POWDER MAY BE APPLIED BY A HAND OR MECHANICAL SPREADER. MIXING OF THE FLOCCULANT POWDER WITH DRY SILICA SAND WILL AID IN SPREADING.

6.7. PREMIXING OF FLOCCULANT POWDER INTO FERTILIZER, SEED, OR OTHER SOIL AMENDMENTS IS ALLOWED WHEN SPECIFIED IN THE DESIGN PLAN. APPLICATION METHOD SHALL ENSURE UNIFORM COVERAGE TO THE TARGET AREA.

6.8. FLOCCULANT LOGS OR BLOCKS SHALL BE APPLIED FOLLOWING SITE TESTING RESULTS TO ENSURE PROPER PLACEMENT AND PERFORMANCE AND SHALL MEET OR EXCEED STATE AND FEDERAL WATER QUALITY REQUIREMENTS.

6.9. DO NOT APPLY FLOCCULANTS DIRECTLY TO, OR WITHIN 60 FEET, OF ANY STREAMS, WETLANDS, OR OTHER NATURAL WATER RESOURCE LOCATED ON OR ADJACENT TO THE CONSTRUCTION SITE. DO NOT APPLY FLOCCULANTS DIRECTLY INTO WATERS CONTAINED WITHIN SEDIMENT PONDS OR TO SLOPES THAT PRODUCE RUNOFF DIRECTLY INTO A STREAM, WETLAND, OR OTHER NATURAL WATER RESOURCE. DO NOT APPLY FLOCCULANTS IMMEDIATELY AT A STORMWATER OUTFALL WHERE RUNOFF LEAVES THE PROJECT LIMITS.

7. UTILITY RELOCATION

ARE UTILITIES INCLUDED IN THE CONTRACT? ☒ YES ☐ NO

IF YES, THE FOLLOWING APPLY:

7.1. STORMWATER WHICH COLLECTS IN THE UTILITY TRENCH SHALL BE PUMPED INTO A DEWATERING STRUCTURE OR SEDIMENT FILTER BAG AND TREATED PRIOR TO DISCHARGE.

7.2. SILT FENCE SHALL BE INSTALLED ON THE DOWNGRADIENT SIDE OF STOCKPILED SOIL. ANY TRENCHING ACROSS WET WEATHER CONVEYANCES SHALL BE DONE DURING DRY CONDITIONS, REMOVED AND STABILIZED BY THE END OF THE WORK DAY.

7.3. UTILITY CROSSINGS IN ENVIRONMENTAL FEATURES SHALL BE CONSTRUCTED IN ACCORDANCE WITH TDOT STANDARDS AND NO WORK SHALL BE CONDUCTED IN FLOWING WATERS. ENVIRONMENTAL PERMITS APPLY TO UTILITIES IN THIS PROJECT. THE STATE CONTRACTOR SHALL COMPLY WITH ALL REQUIREMENTS OF THE PERMITS.

7.4. IT IS THE RESPONSIBILITY OF THE STATE UTILITY CONTRACTOR TO PROTECT EXPOSED EARTH FROM EROSION AND TO PROVIDE FOR CONTAINMENT OF SEDIMENT THAT MAY RESULT FROM THEIR WORK. PRIOR TO BEGINNING WORK, ADEQUATE EPSC MEASURES MUST BE IN PLACE TO TRAP ANY SEDIMENT THAT MAY TRAVEL OFF-SITE IN THE EVENT OF RAIN. DURING THE PROGRESSION OF THEIR WORK, EXPOSED EARTH AREAS SHALL BE STABILIZED AS SOON AS POSSIBLE TO PREVENT EROSION. AT NO TIME, SHALL EXPOSED EARTH RESULTING FROM THEIR OPERATIONS HAVE UNPROTECTED ACCESS TO FLOWING OFF-SITE AND ENTERING WATERS OF THE STATE/U.S.

7.5. FOR THE INSTALLATION OF BURIED UTILITIES (PIPES AND CABLES), TRENCHES SHALL BE BACKFILLED DAILY AS CONSTRUCTION PROCEEDS. BACKFILLED TRENCHES SHALL BE SEEDED AND MULCHED OR SODDED DAILY IF POSSIBLE, BUT NO LATER THAN FOURTEEN DAYS AFTER BEING BACKFILLED. ANY TEMPORARY SPOILS OF EXCAVATED EARTH SHALL BE LOCATED WITHIN TDOT EPSC MEASURES OR RECEIVE SEPARATE EPSC MEASURES. IF TRENCHES ARE NOT BACKFILLED OVERNIGHT, APPROPRIATE EPSC MEASURES WILL BE INSTALLED BY THE STATE UTILITY CONTRACTOR UNTIL THE TRENCH IS BACKFILLED.

7.6. IN REGARDS TO EPSC, TDEC REGULATIONS APPLY TO THE STATE UTILITY CONTRACTORS ON THIS PROJECT. THE STATE CONTRACTOR IS RESPONSIBLE FOR EPSC MEASURES RELATED TO UTILITY CONSTRUCTION INCLUDED IN THE STATE CONTRACT.

7.7. TRENCHES FORMED FOR THE INSTALLATION OF BURIED UTILITIES MAY CAUSE STORMWATER RUNOFF TO CONCENTRATE AT THE TRENCH LINE. ADDITIONAL EPSC MEASURES MAY BE REQUIRED TO BE INSTALLED AS APPROVED BY THE TDOT PROJECT ENGINEER.

7.8. FOR THE INSTALLATION OF UNDERGROUND UTILITIES OUTSIDE OF THE TDOT RIGHT-OF-WAY, EPSC MEASURES SHALL BE INSTALLED PRIOR TO CLEARING (TRENCHING AND ASSOCIATED BLASTING) IN THOSE AREAS NECESSARY TO PREVENT SEDIMENT FROM LEAVING THE CONSTRUCTION AREA. THESE EPSC MEASURES SHALL REMAIN UNTIL THE BACKFILLED TRENCH IS STABILIZED WITH PERMANENT VEGETATIVE COVER.

7.9. THE UTILITY CONTRACTOR SHALL RESTORE ALL AFFECTED WET WEATHER CONVEYANCES TO THE EXISTING TOPOGRAPHIC CONDITIONS AS APPROVED BY THE TDOT RESPONSIBLE PARTY.

7.10. THE UTILITY CONTRACTOR WILL PROVIDE APPROPRIATE EPSC MEASURES TO REPLACE ONSITE EPSC MEASURES REMOVED TO FACILITATE THE INSTALLATION OF UTILITIES. REPLACEMENT OF EPSC MEASURES WILL BE COORDINATED WITH THE TDOT ENGINEER BEFORE COMMENCING WORK.

7.11. FOR UTILITY CROSSINGS THAT UTILIZE HORIZONTAL DIRECTIONAL DRILLING THE FOLLOWING SHALL APPLY:

7.11.1. THE ENTRY AND EXIT POINTS SHALL BE AT LEAST 50 FEET FROM THE STREAM BANK OR WETLAND BOUNDARY.

STATE OF TENNESSEE
DEPARTMENT OF TRANSPORTATION

STORMWATER POLLUTION PREVENTION PLAN

TENNESSEE D.O.T.	DESIGN DIVISION	FILE NO.

TYPE	YEAR	PROJECT NO.	SHEET NO.
PSE	2024	BR-STP-107(28)	S-4

7.11.2. THE DEPTH OF BORE BELOW THE STREAMBED IS SUFFICIENT TO PREVENT RELEASE OF DRILLING FLUID, BASED ON THE PARENT MATERIAL.

7.11.3. A SITE-SPECIFIC CONTINGENCY AND CONTAINMENT PLAN FOR INADVERTENT RELEASE OF DRILLING FLUID SHALL BE ESTABLISHED PRIOR TO COMMENCEMENT OF WORK. THIS PLAN SHALL BE SUBMITTED TO THE TDOT PROJECT ENGINEER AND THE TDOT ENVIRONMENTAL DIVISION PERMITS AND/OR COMPLIANCE AND FIELD SERVICES OFFICE FOR REVIEW AND APPROVAL.

8. MAINTENANCE AND INSPECTION

8.1. INSPECTION PRACTICES (5.5.3.9.)

8.1.1. PROJECT EPSC INSPECTORS AND ENGINEERS (INCLUDING TDOT STAFF, CONSULTANTS AND CONTRACTOR STAFF) RESPONSIBLE FOR THE INSPECTION, IMPLEMENTATION, MAINTENANCE. AND/OR REPAIR OF EPSC MEASURES SHALL MEET ONE OF THE FOLLOWING REQUIREMENTS (5.5.3.10.):

8.1.1.1. SUCCESSFULLY COMPLETED THE TDOT EPSC INSPECTIONS TRAINING AND ANY RECERTIFICATION COURSE AS REQUIRED.

8.1.1.2. SUCCESSFULLY COMPLETED THE TDEC “LEVEL I - FUNDAMENTALS OF EROSION PREVENTION AND SEDIMENT CONTROL” COURSE AND ANY RECERTIFICATION COURSES AS REQUIRED

8.1.1.3. BE A CURRENT TN LICENSED PROFESSIONAL ENGINEER OR LANDSCAPE ARCHITECT.

8.1.1.4. BE A CURRENT CERTIFIED PROFESSIONAL IN EROSION AND SEDIMENT CONTROL (CPESC).

8.1.1.5. SUCCESSFULLY COMPLETED TDEC “LEVEL II – DESIGN PRINCIPLES FOR EROSION PREVENTION AND SEDIMENT CONTROL FOR CONSTRUCTION SITES” COURSE AND ANY RECERTIFICATION COURSE AS REQUIRED.

8.1.2. THE TDOT CONSTRUCTION ENGINEER (OR THEIR DULY AUTHORIZED REPRESENTATIVE) AND THE CONTRACTOR’S SITE SUPERINTENDENT ARE RESPONSIBLE FOR INSPECTIONS. MAINTENANCE AND REPAIR ACTIVITIES ARE THE RESPONSIBILITY OF THE CONTRACTOR. THE TDOT CONSTRUCTION ENGINEER OR THEIR DULY AUTHORIZED REPRESENTATIVE SHALL COMPLETE THE EPSC INSPECTION REPORTS AND DISTRIBUTE COPIES PER THE CONTRACT.

8.1.3. THE INSPECTOR SHALL CONDUCT PRE-CONSTRUCTION INSPECTIONS TO VERIFY AREAS THAT ARE NOT TO BE DISTURBED HAVE BEEN MARKED IN THE SWPPP AND IN THE FIELD BEFORE LAND DISTURBANCE ACTIVITIES BEGIN AND INITIAL MEASURES HAVE BEEN INSTALLED (10 “INSPECTOR”) (5.5.1.f).

8.1.4. EPSC CONTROLS SHALL BE INSPECTED TO VERIFY MEASURES HAVE BEEN INSTALLED AND MAINTAINED IN ACCORDANCE WITH TDOT STANDARD DRAWINGS, SPECIFICATIONS, AND GOOD ENGINEERING PRACTICES. EPSC INSPECTIONS SHALL BE DOCUMENTED ON THE TDOT EPSC INSPECTION REPORT FORM AND THE TDEC CONSTRUCTION STORMWATER INSPECTION CERTIFICATION (TWICE-WEEKLY INSPECTIONS) FORM.

8.1.5. OUTFALL POINTS SHALL BE INSPECTED TO ASCERTAIN WHETHER EPSC MEASURES ARE EFFECTIVE IN PREVENTING EROSION AND CONTROLLING SEDIMENT INCLUDING SIGNIFICANT IMPACTS TO SURROUNDING STATE WATERS, WOTUS (EPHEMERAL), WETLANDS, OTHER NATURAL RESOURCES AND ADJACENT PROPERTY OWNERS. WHERE DISCHARGE LOCATIONS ARE INACCESSIBLE, NEARBY DOWN GRADIENT LOCATIONS SHALL BE INSPECTED. LOCATIONS WHERE VEHICLES ENTER AND EXIT THE SITE SHALL BE INSPECTED FOR EVIDENCE OF OFF-SITE ROADWAY SEDIMENT TRACKING.

8.1.6. INSPECTIONS WILL BE CONDUCTED AT LEAST TWICE EVERY CALENDAR WEEK AND AT LEAST 72 HOURS APART (5.5.3.11.a). A CALENDAR WEEK IS DEFINED AS SUNDAY THROUGH SATURDAY. QUALITY ASSURANCE INSPECTIONS OF TDOT EPSC, NPDES AND WATER QUALITY PERMIT REQUIREMENTS SHALL BE PERFORMED PER THE TDOT ENVIRONMENTAL DIVISION COMPLIANCE AND FIELD SERVICES OFFICE.

8.1.7. THE FREQUENCY OF EPSC INSPECTIONS MAY BE REDUCED TO ONCE A MONTH WHERE SITES OR PORTIONS OF SITES HAVE BEEN TEMPORARILY STABILIZED UNTIL CONSTRUCTION ACTIVITIES RESUME WITH WRITTEN NOTIFICATION BY THE TDOT REGIONAL ENGINEER TO TDEC NASHVILLE CENTRAL OFFICE AND SUBSEQUENT TDEC APPROVAL. WRITTEN NOTIFICATION MUST INCLUDE THE INTENT TO CHANGE FREQUENCY AND JUSTIFICATION (5.5.3.11.a).

8.1.8. ALL DISTURBED AREAS OF THE SITE THAT HAVE NOT BEEN PERMANENTLY STABILIZED, AREAS USED FOR MATERIAL STORAGE THAT ARE EXPOSED TO PRECIPITATION, STRUCTURAL CONTROL MEASURES, AND LOCATIONS WHERE VEHICLES ENTER OR EXIT THE SITE, AND EACH OUTFALL WILL BE INSPECTED (5.5.3.11.b).

8.1.9. THE INSPECTOR WILL OVERSEE THE REQUIREMENTS OF OTHER CONSTRUCTION-RELATED WATER QUALITY PERMITS (I.E. TDEC ARAP, USACE SECTION 404, AND TVA SECTION 26a PERMITS) FOR CONSTRUCTION ACTIVITIES AROUND WATERS OF THE STATE (10 “INSPECTOR”).

8.1.10. THE SWPPP WILL BE REVISED AS NECESSARY BASED ON THE RESULTS OF THE INSPECTION. REVISION(S) WILL BE RECORDED WITHIN 1 WEEK OF THE INSPECTION. REVISION(S) WILL BE IMPLEMENTED WITHIN 2 WEEKS OF THE INSPECTION (5.5.3.11.e AND 5.5.3.11.f).

8.1.11. DOCUMENTATION OF INSPECTIONS WILL BE MAINTAINED ON SITE IN THE “DOCUMENTATION AND PERMITS” BINDER. REPORTS WILL BE SUBMITTED TO THE TDOT PROJECT ENGINEER PER THE CONTRACT.

8.1.12. THESE INSPECTION REQUIREMENTS DO NOT APPLY TO DEFINABLE AREAS OF THE SITE THAT HAVE MET PERMANENT STABILIZATION REQUIREMENTS AND HAVE BEEN NOTED IN THE SWPPP.

8.1.13. TRAINED CERTIFIED INSPECTORS SHALL COMPLETE INSPECTION TO THE BEST OF THEIR ABILITY. FALSIFYING INSPECTION RECORDS OR OTHER DOCUMENTATION OR FAILURE TO COMPLETE INSPECTION DOCUMENTATION SHALL RESULT IN A VIOLATION OF THIS PERMIT AND ANY OTHER APPLICABLE ACTS OR RULES (5.5.3.11.h).

8.2. DULY AUTHORIZED REPRESENTATIVE (8.7.3.)

THE PROJECT ENGINEER MAY DELEGATE AN INDIVIDUAL AND/OR CONSULTANT TO SIGN EPSC INSPECTIONS REPORTS. FOR SATISFYING SIGNATORY REQUIREMENTS FOR EPSC INSPECTION REPORTS, THE PROJECT ENGINEER AND NEWLY AUTHORIZED INDIVIDUAL ACCEPTING RESPONSIBILITY MUST COMPLETE AND SIGN THE TDOT CONSTRUCTION DIVISION EPSC DELEGATION OF AUTHORITY.

8.3. MAINTENANCE PRACTICES (5.1 AND 8.13.)

8.3.1. ALL CONTROLS WILL BE MAINTAINED IN GOOD AND EFFECTIVE OPERATING ORDER AND IN ACCORDANCE WITH TDOT STANDARD DRAWINGS AND GOOD ENGINEERING PRACTICES. (5.1. AND 5.5.3.1.b)

8.3.2. MAINTENANCE AND REPAIR ACTIVITIES ARE THE RESPONSIBILITY OF THE CONTRACTOR.

8.3.3. UPON CONCLUSION OF THE INSPECTIONS, EPSC MEASURES FOUND TO BE INEFFECTIVE SHALL BE REPAIRED, REPLACED, OR MODIFIED BEFORE THE NEXT RAIN EVENT, IF POSSIBLE, BUT IN NO CASE, MORE THAN 24 HOURS AFTER THE INSPECTION OR WHEN THE CONDITION IS IDENTIFIED. IF THE REPAIR, REPLACEMENT OR MODIFICATION IS NOT PRACTICAL WITHIN THE 24-HOUR TIMEFRAME, WRITTEN DOCUMENTATION PROVIDED BY THE CONTRACTOR SHALL BE PLACED IN THE FIELD DIARY AND EPSC INSPECTION REPORT. AN ESTIMATED REPAIR, REPLACEMENT OR MODIFICATION SCHEDULE SHALL BE DOCUMENTED WITHIN 24 HOURS AFTER IDENTIFICATION. (5.5.3.11.e).

8.3.4. SEDIMENT SHALL BE REMOVED FROM SEDIMENT CONTROL STRUCTURES (SEDIMENT TRAPS, SILT FENCE, SEDIMENT BASINS, OTHER CONTROLS, ETC.) WHEN THE DESIGN CAPACITY HAS BEEN REDUCED BY FIFTY PERCENT (50%). (5.5.3.1.d).

8.3.5. DURING SEDIMENT REMOVAL, THE CONTRACTOR SHALL TAKE STEPS TO ENSURE THAT STRUCTURAL COMPONENTS OF EPSC MEASURES ARE NOT DAMAGED AND THUS MADE INEFFECTIVE. IF DAMAGE DOES OCCUR, THE CONTRACTOR SHALL REPAIR THE EPSC MEASURES AT THE CONTRACTOR'S OWN EXPENSE.

8.3.6. CHECK DAMS WILL BE INSPECTED FOR STABILITY. SEDIMENT WILL BE REMOVED WHEN DEPTH REACHES ONE-HALF (½) THE HEIGHT OF THE DAM.

8.3.7. SEDIMENT REMOVED FROM SEDIMENT CONTROL STRUCTURES SHALL BE PLACED AND TREATED IN A MANNER SO THAT THE SEDIMENT IS CONTAINED WITHIN THE PROJECT LIMITS, DOES NOT MIGRATE INTO FEATURES REMOVED FROM, AND DOES NOT MIGRATE ONTO ADJACENT PROPERTIES AND/OR INTO WATERS OF THE STATE/U.S.

8.3.8. LITTER, CONSTRUCTION DEBRIS, AND CONSTRUCTION CHEMICALS EXPOSED TO STORMWATER WILL BE PICKED UP AND REMOVED FROM STORMWATER EXPOSURE PRIOR TO ANTICIPATED STORM EVENTS OR BEFORE BEING CARRIED OFF THE SITE BY WIND, OR OTHERWISE PREVENTED FROM BECOMING A POLLUTANT SOURCE FOR STORMWATER DISCHARGES. AFTER USE, MATERIALS USED FOR EROSION CONTROL WILL BE REMOVED (5.5.3.7.a).

8.3.9. ALL SEEDED AREAS WILL BE CHECKED FOR BARE SPOTS, EROSION WASHOUTS, AND VIGOROUS GROWTH FREE OF SIGNIFICANT WEED INFESTATIONS.

9. SITE ASSESSMENTS (5.5.3.8.)

QUALITY ASSURANCE SITE ASSESSMENTS OF EROSION PREVENTION AND SEDIMENT CONTROLS SHALL BE PERFORMED PER THE TDOT ENVIRONMENTAL DIVISION COMPLIANCE AND FIELD SERVICES OFFICE GUIDELINES.

10. STORMWATER MANAGEMENT (5.5.3.11.h)

10.1. STORMWATER MANAGEMENT WILL BE HANDLED BY TEMPORARY CONTROLS OUTLINED IN THIS SWPPP AND ANY PERMANENT CONTROLS NEEDED TO MEET PERMANENT STORMWATER MANAGEMENT NEEDS IN THE POST CONSTRUCTION PERIOD. PERMANENT CONTROLS WILL BE DEPICTED ON THE PLANS AND NOTED AS PERMANENT.

10.2. DESCRIBE ANY SPECIFIC POST-CONSTRUCTION MEASURES THAT WILL CONTROL VELOCITY, POLLUTANTS, AND/OR EROSION (5.5.3.6.c): _____

10.3. OTHER ITEMS NEEDING CONTROL (5.5.3.7.)

CONSTRUCTION MATERIALS: THE FOLLOWING MATERIALS OR SUBSTANCES ARE EXPECTED TO BE PRESENT ON THE SITE DURING THE CONSTRUCTION PERIOD. (CHECK ALL THAT APPLY).

- ☒ LUMBER, GUARDRAIL, TRAFFIC CONTROL DEVICES
- ☒ CONCRETE WASHOUT
- ☒ PIPE CULVERTS (I.E. CONCRETE, CORRUGATED METAL, HDPE, ETC.)
- ☒ MINERAL AGGREGATES, ASPHALT
- ☒ EARTH
- ☒ LIQUID TRAFFIC STRIPING MATERIALS, PAINT
- ☒ ROCK
- ☒ CURING COMPOUND
- ☐ EXPLOSIVES
- ☐ OTHER _____

THESE MATERIALS WILL BE HANDLED AS NOTED IN THIS SWPPP.

10.4. WASTE MATERIALS (5.5.3.7.c)

WASTE MATERIAL (EARTH, ROCK, ASPHALT, CONCRETE, ETC.) NOT REQUIRED FOR THE CONSTRUCTION OF THE PROJECT WILL BE DISPOSED OF BY THE CONTRACTOR IN ACCORDANCE WITH THE TDOT CONSTRUCTION CONTRACT AND FEDERAL AND STATE REGULATIONS. IMPACTS TO WATERS OF THE STATE/U.S. SHALL BE AVOIDED IF POSSIBLE. IF UNAVOIDABLE, THE CONTRACTOR WILL OBTAIN ALL NECESSARY PERMITS INCLUDING, BUT NOT LIMITED TO NPDES, AQUATIC RESOURCES ALTERATION PERMIT(S) CORPS OF ENGINEERS SECTION 404 PERMITS, AND TVA SECTION 26A PERMITS TO DISPOSE OF WASTE MATERIALS.

10.5. HAZARDOUS WASTE (5.5.3.7.c) (8.8)

ALL HAZARDOUS WASTE MATERIALS WILL BE DISPOSED OF IN A MANNER WHICH IS COMPLIANT WITH LOCAL OR STATE REGULATIONS. SITE PERSONNEL WILL BE INSTRUCTED IN THESE PRACTICES, AND THE INDIVIDUAL DESIGNATED AS THE CONTRACTOR’S ON-SITE REPRESENTATIVE WILL BE RESPONSIBLE FOR SEEING THAT THESE PRACTICES ARE FOLLOWED. THE CONTRACTOR WILL OBTAIN ALL NECESSARY PERMITS TO DISPOSE OF HAZARDOUS MATERIAL.

10.6. SANITARY WASTE (5.5.3.7.b)

PORTABLE SANITARY FACILITIES WILL BE PROVIDED ON ALL CONSTRUCTION SITES. SANITARY WASTE WILL BE COLLECTED FROM THE PORTABLE UNITS IN A TIMELY MANNER BY A LICENSED WASTE MANAGEMENT CONTRACTOR OR AS REQUIRED BY ANY LOCAL REGULATIONS. THE CONTRACTOR WILL OBTAIN ALL NECESSARY PERMITS TO DISPOSE OF SANITARY WASTE.

10.7. OTHER MATERIALS

STATE OF TENNESSEE
DEPARTMENT OF TRANSPORTATION

STORMWATER POLLUTION PREVENTION PLAN

TENNESSEE D.O.T.	DESIGN DIVISION	FILE NO.

TYPE	YEAR	PROJECT NO.	SHEET NO.
PSE	2024	BR-STP-107 (28)	S-5

THE FOLLOWING MATERIALS OR SUBSTANCES ARE EXPECTED TO BE PRESENT ON THE SITE DURING THE CONSTRUCTION PERIOD. (CHECK ALL THAT APPLY).

☒ FERTILIZERS AND LIME
☐ PESTICIDES AND/OR HERBICIDES
☒ DIESEL AND GASOLINE
☒ MACHINERY LUBRICANTS (OIL AND GREASE)

THESE MATERIALS WILL BE HANDLED AS NOTED IN THIS SWPPP.

11. NON-STORMWATER DISCHARGES (5.5.3.12.)

11.1. THE FOLLOWING NON-STORMWATER DISCHARGES ARE ANTICIPATED DURING THE CONSTRUCTION OF THIS PROJECT (CHECK ALL THAT APPLY):

☒ DEWATERING OF WORK AREAS OF COLLECTED STORMWATER AND GROUND WATER.
☒ WATERS USED TO WASH VEHICLES (OF DUST AND SOIL) WHERE DETERGENTS ARE NOT USED AND DETENTION AND/OR FILTERING IS PROVIDED BEFORE THE WATER LEAVES THE SITE.
☒ WATER USED TO CONTROL DUST. (3.5.3.1.n)
☐ POTABLE WATER SOURCES INCLUDING WATERLINE FLUSHING FROM WHICH CHLORINE HAS BEEN REMOVED TO THE MAXIMUM EXTENT PRACTICABLE.
☐ UNCONTAMINATED GROUNDWATER OR SPRING WATER.
☐ FOUNDATION OR FOOTING DRAINS WHERE FLOWS ARE NOT CONTAMINATED WITH POLLUTANTS.
☐ OTHER: _____

11.2. ALL ALLOWABLE NON-STORMWATER DISCHARGES WILL BE DIRECTED TO STABLE DISCHARGE STRUCTURES PRIOR TO LEAVING THE SITE. FILTERING OR CHEMICAL TREATMENT MAY BE NECESSARY PRIOR TO DISCHARGE. ALL CHEMICAL TREATMENTS MUST BE APPLIED PER SECTION 6 FLOCCULANTS.

11.3. THE DESIGN OF ALL IMPACTED EPSC MEASURES RECEIVING FLOW FROM ALLOWABLE NON-STORMWATER DISCHARGES MUST BE DESIGNED TO HANDLE THE VOLUME OF THE NON-STORMWATER COMPONENT.

11.4. WASH DOWN OR WASTE DISCHARGE OF CONCRETE TRUCKS WILL NOT BE PERMITTED ON-SITE UNLESS PROPER SETTLEMENT AREAS HAVE BEEN PROVIDED IN ACCORDANCE WITH BOTH STATE AND FEDERAL REGULATIONS.

11.5. ARE ANY DISCHARGES ASSOCIATED WITH INDUSTRIAL (NON-CONSTRUCTION STORMWATER) ACTIVITY EXPECTED (5.5.1.g)?

☐ YES ☒ NO

IF YES, SPECIFY THE LOCATION OF THE ACTIVITY AND ITS PERMIT NUMBER: _____

12. SPILL PREVENTION, MANAGEMENT AND NOTIFICATION (5.5.3.7.c, 6.1)

12.1. SPILL PREVENTION (5.5.3.7.c)

12.1.1. CONTRACTOR'S BULK FUEL AND PETROLEUM PRODUCTS STORED ON-SITE OR ADJACENT TO THE R.O.W. IN ABOVE GROUND STORAGE TANKS WITH AGGREGATE STORAGE CAPACITY IN EXCESS OF 1,320 GALLONS SHALL HAVE SECONDARY CONTAINMENT.

12.1.2. THE CONTRACTOR SHALL BE RESPONSIBLE FOR PREPARING A SPILL PREVENTION CONTROL AND COUNTERMEASURE (SPCC) PLAN AS REQUIRED BY TDOT SPECIAL PROVISION 107FP (REGARDING WATER QUALITY AND STORM WATER PERMITS) AND THE LAW PRIOR TO STORING 1320 GALLONS ON SITE.

12.1.3. THE CONTRACTOR SHALL BE SOLELY RESPONSIBLE FOR OBTAINING ANY NECESSARY LOCAL, STATE, AND FEDERAL PERMITS. THE SPCC PLAN AND/OR PERMITS SHALL BE KEPT ON-SITE AND A COPY PROVIDED TO THE TDOT CONSTRUCTION ENGINEER.

12.2. MATERIAL MANAGEMENT

12.2.1. HOUSEKEEPING

ONLY CONSTRUCTION PRODUCTS NEEDED SHALL BE STORED ON-SITE BY THE CONTRACTOR. EXCEPT FOR BULK MATERIALS THE CONTRACTOR WILL STORE ALL MATERIALS UNDER COVER AND IN APPROPRIATE CONTAINERS. PRODUCTS MUST BE STORED IN ORIGINAL CONTAINERS AND LABELED. MATERIAL MIXING WILL BE CONDUCTED IN ACCORDANCE WITH THE MANUFACTURER'S RECOMMENDATIONS. WHEN POSSIBLE, ALL PRODUCTS WILL BE USED COMPLETELY BEFORE PROPERLY DISPOSING OF THE CONTAINER OFF SITE. THE MANUFACTURER'S DIRECTIONS FOR DISPOSAL OF MATERIALS AND CONTAINERS WILL BE FOLLOWED. THE CONTRACTOR'S SITE SUPERINTENDENT WILL INSPECT MATERIALS STORAGE AREAS REGULARLY TO ENSURE PROPER USE AND DISPOSAL. DUST GENERATED WILL BE CONTROLLED IN AN ENVIRONMENTALLY SAFE MANNER. VEGETATION AREAS NOT ESSENTIAL TO THE CONSTRUCTION PROJECT WILL BE PRESERVED AND MAINTAINED AS NOTED ON THE PLANS.

12.2.2. HAZARDOUS MATERIALS

PRODUCTS MUST BE STORED IN ORIGINAL CONTAINERS UNLESS THE CONTAINER IS NOT RE-SEALABLE. ORIGINAL LABELS AND MATERIAL SAFETY DATA SHEETS WILL BE RETAINED IN A SAFE PLACE TO RELAY IMPORTANT PRODUCT INFORMATION. IF SURPLUS PRODUCT MUST BE DISPOSED OF, MANUFACTURER'S LABEL DIRECTIONS FOR DISPOSAL WILL BE FOLLOWED. MAINTENANCE AND REPAIR OF ALL EQUIPMENT AND VEHICLES INVOLVING OIL CHANGES, HYDRAULIC SYSTEM DRAIN DOWN, DE-GREASING OPERATIONS, FUEL TANK DRAIN DOWN AND REMOVAL, AND OTHER ACTIVITIES WHICH MAY RESULT IN THE ACCIDENTAL RELEASE OF CONTAMINANTS WILL BE CONDUCTED ON AN IMPERVIOUS SURFACE AND UNDER COVER DURING WET WEATHER TO PREVENT THE RELEASE OF CONTAMINANTS ONTO THE GROUND. WHEEL WASH WATER WILL BE COLLECTED AND ALLOWED TO SETTLE OUT SUSPENDED SOLIDS PRIOR TO DISCHARGE. WHEEL WASH WATER WILL NOT BE DISCHARGED DIRECTLY INTO ANY STORMWATER SYSTEM OR STORMWATER TREATMENT SYSTEM. POTENTIAL pH-MODIFYING MATERIALS SUCH AS: BULK CEMENT, CEMENT KILN DUST, FLY ASH, NEW CONCRETE WASHINGS AND CURING WATERS, CONCRETE PUMPING, AND MIXER WASHOUT WATERS WILL BE COLLECTED ON SITE AND MANAGED TO PREVENT CONTAMINATION OF STORMWATER RUNOFF.

12.3. PRODUCT SPECIFIC PRACTICES

12.3.1. PETROLEUM PRODUCTS: ALL ON-SITE VEHICLES WILL BE MONITORED FOR LEAKS AND RECEIVE REGULAR PREVENTIVE MAINTENANCE TO REDUCE THE CHANCE OF LEAKAGE. PETROLEUM PRODUCTS WILL BE STORED IN TIGHTLY SEALED CONTAINERS WHICH ARE CLEARLY LABELED.

12.3.2. FERTILIZERS: FERTILIZERS WILL BE APPLIED ONLY IN THE AMOUNTS SPECIFIED BY TDOT. ONCE APPLIED, FERTILIZERS WILL BE WORKED INTO THE SOIL TO LIMIT THE EXPOSURE TO STORMWATER. FERTILIZERS WILL BE STORED IN AN ENCLOSED AREA UNDER COVER. THE CONTENTS OF PARTIALLY USED FERTILIZER BAGS WILL BE TRANSFERRED TO SEALABLE CONTAINERS TO AVOID SPILLS.

12.3.3. PAINTS: ALL CONTAINERS WILL BE TIGHTLY SEALED AND STORED WHEN NOT REQUIRED FOR USE. THE EXCESS WILL BE DISPOSED OF PER THE MANUFACTURER'S INSTRUCTIONS AND APPLICABLE STATE AND LOCAL REGULATIONS.

12.3.4. CONCRETE TRUCKS: CONTRACTORS WILL PROVIDE DESIGNATED TRUCK WASHOUT AREAS ON THE SITE. THESE AREAS MUST BE SELF CONTAINED AND NOT CONNECTED TO ANY STORMWATER OUTLET OF THE SITE, AND PROPERLY SIGNED. UPON COMPLETION OF CONSTRUCTION WASHOUT AREAS WILL BE PROPERLY STABILIZED.

12.4. SPILL MANAGEMENT

IN ADDITION TO THE PREVIOUS HOUSEKEEPING AND MANAGEMENT PRACTICES, THE FOLLOWING PRACTICES WILL BE FOLLOWED FOR SPILL PREVENTION AND CLEANUP IF NECESSARY:

12.4.1. ALL ONSITE VEHICLES SHALL BE MONITORED FOR LEAKS AND RECEIVE REGULAR PREVENTATIVE MAINTENANCE TO REDUCE THE CHANGE OF LEAKAGE AND SPILLS.

12.4.2. FOR ALL HAZARDOUS MATERIALS STORED ON SITE, THE MANUFACTURER'S RECOMMENDED METHODS FOR SPILL CLEAN UP WILL BE CLEARLY POSTED. SITE PERSONNEL WILL BE MADE AWARE OF THE PROCEDURES AND THE LOCATIONS OF THE INFORMATION AND CLEANUP SUPPLIES.

12.4.3. APPROPRIATE CLEANUP MATERIALS AND EQUIPMENT WILL BE MAINTAINED BY THE CONTRACTOR IN THE MATERIALS STORAGE AREA ON-SITE AND UNDER COVER. SPILL RESPONSE EQUIPMENT SHALL BE INSPECTED AND MAINTAINED BY THE CONTRACTOR AS NECESSARY TO REPLACE ANY MATERIALS USED IN SPILL RESPONSE ACTIVITIES.

12.4.4. ALL SPILLS SHALL BE CLEANED IMMEDIATELY AFTER DISCOVERY AND THE MATERIALS DISPOSED OF PROPERLY. THE SPILL AREA WILL BE KEPT WELL VENTILATED AND PERSONNEL WILL WEAR APPROPRIATE PROTECTIVE CLOTHING TO PREVENT INJURY FROM CONTACT WITH A HAZARDOUS SUBSTANCE.

12.4.5. THE CONTRACTOR'S RESPONSIBLE PARTY WILL BE THE SPILL PREVENTION AND CLEANUP COORDINATOR. THE CONTRACTOR IS RESPONSIBLE FOR ENSURING THAT THE SITE SUPERINTENDENT HAS HAD APPROPRIATE TRAINING FOR HAZARDOUS MATERIALS HANDLING, SPILL MANAGEMENT, AND CLEANUP.

12.4.6. IF SPILLS REPRESENT AN IMMINENT THREAT OF ESCAPING THE SITE AND ENTERING RECEIVING WATERS, PERSONNEL WILL RESPOND IMMEDIATELY TO CONTAIN THE RELEASE AND NOTIFY THE SUPERINTENDENT AFTER THE SITUATION HAS BEEN STABILIZED.

12.4.7. IF AN OIL SHEEN IS OBSERVED ON SURFACE WATER (E.G. SETTLING PONDS, DETENTION PONDS, SWALES), ACTION WILL BE TAKEN IMMEDIATELY TO REMOVE THE MATERIAL CAUSING THE SHEEN. THE CONTRACTOR WILL USE APPROPRIATE MATERIALS TO CONTAIN AND ABSORB THE SPILL. THE SOURCE OF THE OIL SHEEN WILL ALSO BE IDENTIFIED AND REMOVED OR REPAIRED AS NECESSARY TO PREVENT FURTHER RELEASES.

12.4.8. IF A SPILL OCCURS THE CONTRACTOR'S RESPONSIBLE PARTY SHALL BE RESPONSIBLE FOR COMPLETING THE SPILL REPORTING FORM AND FOR REPORTING THE SPILL TO THE TDOT PROJECT RESPONSIBLE PARTY. ALL SPILLS MUST BE REPORTED TO THE APPROPRIATE AGENCY, AND MEASURES SHALL BE TAKEN IMMEDIATELY TO PREVENT THE POLLUTION OF WATERS OF THE STATE/U.S., INCLUDING GROUNDWATER, SHOULD A SPILL OCCUR.

12.5. SPILL NOTIFICATION (6.1)

WHERE A RELEASE CONTAINING A HAZARDOUS SUBSTANCE IN AN AMOUNT EQUAL TO, OR MORE THAN A REPORTABLE QUANTITY ESTABLISHED UNDER EITHER 40 CFR 117 OR 40 CFR 302 OCCURS DURING A 24 HOUR PERIOD:

12.5.1. THE TDOT PROJECT ENGINEER IS RESPONSIBLE FOR NOTIFYING THE REGIONAL PROJECT DEVELOPMENT OFFICE (E.G. TRANSPORTATION ENVIRONMENTAL STUDIES SPECIALIST) AS SOON AS HE OR SHE HAS KNOWLEDGE OF THE DISCHARGE.

12.5.2. THE TDOT REGIONAL PROJECT DEVELOPMENT OFFICE WILL NOTIFY THE LOCAL TDEC ENVIRONMENTAL FIELD OFFICE AND ANY OTHER APPLICABLE REGULATORY AGENCIES WITHIN 24 HOURS OF THE SPILL.

12.5.3. IN ADDITION TO ANY FOLLOW UP NOTIFICATIONS REQUIRED BY FEDERAL LAW, A WRITTEN DESCRIPTION OF THE RELEASE, DATE OF RELEASE AND CIRCUMSTANCES LEADING TO THE RELEASE, WHAT ACTIONS WERE TAKEN TO MITIGATE EFFECTS OF THE RELEASE, AND STEPS TAKEN TO MINIMIZE THE CHANCE OF FUTURE OCCURRENCES WILL BE SUBMITTED TO THE APPROPRIATE TDEC ENVIRONMENTAL FIELD OFFICE WITHIN 2 WEEKS OF KNOWLEDGE OF THE RELEASE.

12.5.4. THE SWPPP MUST BE MODIFIED WITHIN 2 WEEKS OF KNOWLEDGE OF THE RELEASE PROVIDING A DESCRIPTION OF THE RELEASE, CIRCUMSTANCES LEADING TO THE RELEASE, AND THE DATE OF RELEASE. THE SWPPP WILL BE REVIEWED AND MODIFIED AS NECESSARY TO IDENTIFY MEASURES TO PREVENT THE REOCCURRENCE OF SUCH RELEASES AND TO RESPOND TO SUCH RELEASES.

13. RECORD-KEEPING

13.1. REQUIRED RECORDS

TDOT OR THEIR DULY AUTHORIZED REPRESENTATIVE WILL MAINTAIN AT THE SITE THE FOLLOWING RECORDS OF CONSTRUCTION ACTIVITIES (7.2.1.) (7.2.1.):

13.1.1. THE DATES WHEN MAJOR GRADING ACTIVITIES OCCUR.

13.1.2. THE DATES WHEN CONSTRUCTION ACTIVITIES TEMPORARILY OR PERMANENTLY CEASE ON A PORTION OF THE SITE.

13.1.3. THE DATES WHEN STABILIZATION MEASURES ARE INITIATED.

STATE OF TENNESSEE
DEPARTMENT OF TRANSPORTATION

STORMWATER POLLUTION PREVENTION PLAN

13.1.4. RECORDS EPSC INSPECTION REPORTS AND CORRECTIVE MEASURES.

13.1.5. RECORDS OF QUALITY ASSURANCE SITE ASSESSMENTS.

13.1.6. COPY OF SITE EPSC INSPECTOR'S CERTIFICATION AND/OR LICENSING

13.1.7. A COPY OF ANY REGULATORY CORRESPONDENCE REGARDING THE EFFECTIVENESS OF THE SWPPP OR EPSC CONTROLS.

13.2. RAINFALL MONITORING PLAN (7.2.1.):

13.2.1. EQUIPMENT

AT A MINIMUM, THE CONTRACTOR WILL INSTALL A FENCE POST TYPE RAIN GAUGE TO MEASURE RAINFALL. THE STANDARD FENCE POST RAIN GAUGE WILL BE A WEDGE-SHAPED GAUGE THAT MEASURES UP TO 6 INCHES OF RAINFALL. AN ENGLISH SCALE WILL BE PROVIDED ON ONE FACE, WITH A METRIC SCALE ON THE OTHER FACE. GRADUATION WILL BE PERMANENTLY MOLDED IN DURABLE WEATHER-RESISTANT PLASTIC. THE MINIMUM GRADUATION WILL BE 0.01 INCH (OR 0.1MM). AN ALUMINUM BRACKET WITH SCREWS MAY BE USED TO MOUNT THE GAUGE ON A WOODEN SUPPORT.

13.2.2. LOCATION

THE RAIN GAUGE WILL BE LOCATED AT OR ALONG THE PROJECT SITE, AS DEFINED IN THE NOI OF THE NPDES PERMIT, IN AN OPEN AREA SUCH THAT THE MEASUREMENT WILL NOT BE INFLUENCED BY OUTSIDE FACTORS (I.E. OVERHANGS, GUTTER, TREES, ETC.). AT LEAST ONE RAIN GAUGE PER LINEAR MILE IS REQUIRED ALONG (AS MEASURED ALONG THE CENTERLINE OF THE PRIMARY ALIGNMENT) THE PROJECT WHERE CLEARING, GRUBBING, EXCAVATION, GRADING, CUTTING OR FILLING IS ACTIVELY PERFORMED, OR EXPOSED SOIL HAS NOT YET BEEN PERMANENTLY STABILIZED.

13.2.3. METHODS

RAINFALL MONITORING WILL BE INITIATED PRIOR TO CLEARING, GRUBBING, EXCAVATION, GRADING, CUTTING, OR FILLING, EXCEPT AS SUCH MINIMAL CLEARING MAY BE NECESSARY TO INSTALL A RAIN GAUGE IN AN OPEN AREA. THE RAIN GAUGE WILL BE CHECKED FOR OPERATIONAL SOUNDNESS DAILY (DURING NORMAL BUSINESS HOURS) IN WET TIMES AND WEEKLY IN DRY TIMES. GAUGES WILL BE REPAIRED OR REPLACED ON THE SAME DAY IF FOUND TO BE NON-OPERATIONAL OR MISSING.

13.2.4. EACH RAIN GAUGE WILL BE READ (FOR DETAILED RECORDS OF RAINFALL) AND EMPTIED AFTER EVERY RAINFALL EVENT OCCURRING ON THE PROJECT SITE AT APPROXIMATELY THE SAME TIME OF THE DAY (DURING NORMAL BUSINESS HOURS). DURING PERIODS OF DRY CONDITIONS, IT WILL NOT BE NECESSARY TO READ THE RAIN GAUGE EVERY DAY. IN LIEU OF THIS REQUIREMENT ON WEEKENDS AND ON STATE HOLIDAYS, THE RAIN GAUGES CAN BE EMPTIED THE NEXT BUSINESS DAY AND A REFERENCE SITE USED FOR A RECORD OF DAILY AMOUNT OF PRECIPITATION FOR THOSE DAYS. A REFERENCE SITE IS THE DOCUMENTATION FROM THE CLOSEST GAUGE WITHIN PROXIMITY OF THE PROJECT FROM A RECOGNIZED SOURCE SUCH AS THE NOAA NATIONAL WEATHER SERVICE.

13.2.5. DETAILED RECORDS WILL BE RECORDED OF RAINFALL EVENTS INCLUDE DATES, AMOUNTS OF RAINFALL, AND THE APPROXIMATE DURATION (OR THE STARTING AND ENDING TIMES). THE RAINFALL RECORDS SHALL BE RECORDED ON THE TDOT RAINFALL RECORD SHEET AND SHALL BE MAINTAINED IN THE "DOCUMENTATION AND PERMITS" BINDER.

13.2.6. IF THE RAINFALL EVENT IS STILL IN PROGRESS AT THE DAILY RECORDING TIME, THE GAUGE WILL BE EMPTIED AND THE RECORD WILL INDICATE THAT THE STORM EVENT WAS STILL IN PROGRESS.

13.2.7. RAIN GAUGE INFORMATION (DETAILED RECORDS), INCLUDING THE LOCATION OF THE NEAREST OUTFALL, WILL BE RECORDED ON THE EPSC INSPECTION REPORT FORMS AT THE TIME OF MEASUREMENT.

13.3. KEEPING PLANS CURRENT (5.4.)

13.3.1. THE EPSC PLAN IS TO SERVE AS AN INITIAL GUIDE FOR SITE PERSONNEL AS THE CONSTRUCTION PROCESS DEVELOPS. IT MUST BE AMENDED, MODIFIED, AND UPDATED WHENEVER EPSC INSPECTIONS INDICATE, OR WHERE STATE OR FEDERAL REGULATORY OFFICIALS DETERMINE EPSC MEASURES ARE PROVING INEFFECTIVE IN ELIMINATING OR SIGNIFICANTLY MINIMIZING POLLUTANT SOURCES OR ARE OTHERWISE NOT ACHIEVING THE GENERAL OBJECTIVES OF CONTROLLING POLLUTANTS IN STORMWATER DISCHARGES ASSOCIATED WITH THE CONSTRUCTION ACTIVITY.

13.3.2. THE STAGES DEPICTED WITHIN THE EPSC PLANS MAY NOT COINCIDE WITH THE ACTUAL STAGES OF CONSTRUCTION ESTABLISHED BY THE CONTRACTOR DURING CONSTRUCTION, THUS MODIFICATIONS WILL BE REQUIRED TO ENSURE THE EPSC PLAN IS MAINTAINED TO DEPICT CURRENT SITE CONDITIONS. IT SHOULD BE MAINTAINED SUCH THAT IT WILL ALWAYS REFLECT THE MEASURES THAT ARE INSTALLED DURING THE VARIOUS STAGES OF CONSTRUCTION. IT IS IMPRACTICAL TO DETERMINE ALL THE INTERMEDIATE STAGES OF CONSTRUCTION THAT WILL OCCUR, THUS THESE DOCUMENTS MUST BE UPDATED THROUGHOUT THE LIFE OF THE CONSTRUCTION PROJECT.

13.3.3. THE TDOT EPSC INSPECTOR OR THEIR DULY AUTHORIZED REPRESENTATIVE WILL MODIFY AND UPDATE THE SWPPP WHEN ANY OF THE FOLLOWING CONDITIONS APPLY:

13.3.3.1. WHENEVER THERE IS A CHANGE IN THE SCOPE OF THE PROJECT THAT WOULD BE EXPECTED TO HAVE A SIGNIFICANT EFFECT ON THE DISCHARGE OF POLLUTANTS TO THE WATERS OF THE STATE AND WHICH HAS NOT OTHERWISE BEEN ADDRESSED IN THE SWPPP;

13.3.3.2. WHENEVER INSPECTIONS OR INVESTIGATIONS BY SITE OPERATORS, LOCAL, STATE, OR FEDERAL OFFICIALS INDICATE THE SWPPP IS PROVING INEFFECTIVE IN ELIMINATING OR SIGNIFICANTLY MINIMIZING POLLUTANTS FROM CONSTRUCTION ACTIVITY SOURCES, OR IS OTHERWISE NOT ACHIEVING THE GENERAL OBJECTIVES OF CONTROLLING POLLUTANTS IN STORMWATER DISCHARGES ASSOCIATED WITH CONSTRUCTION ACTIVITY; WHERE LOCAL, STATE, OR FEDERAL OFFICIALS DETERMINE THAT THE SWPPP IS INEFFECTIVE IN ELIMINATING OR SIGNIFICANTLY MINIMIZING POLLUTANT SOURCES, A COPY OF ANY CORRESPONDENCE TO THAT EFFECT MUST BE RETAINED IN THE SWPPP;

13.3.3.3. WHEN ANY NEW OPERATOR AND/OR SUB-OPERATOR IS ASSIGNED OR RELIEVED OF THEIR RESPONSIBILITY TO IMPLEMENT A PORTION OF THE SWPPP;

13.3.3.4. TO PREVENT A NEGATIVE IMPACT TO LEGALLY PROTECTED STATE OR FEDERALLY LISTED OR PROPOSED THREATENED OR ENDANGERED AQUATIC FAUNA;

13.3.3.5. WHEN THERE IS A CHANGE IN CHEMICAL TREATMENT METHODS INCLUDING: USE OF DIFFERENT TREATMENT CHEMICALS, DIFFERENT DOSAGE OR APPLICATION RATES OR A DIFFERENT AREA OF APPLICATION NOT SPECIFIED ON THE EPSC PLANS.

13.3.3.6. ALL SWPPP REVISION(S) SHALL BE RECORDED WITHIN 1 WEEK BY THE PROJECT EPSC INSPECTOR.

13.3.3.7. WHEN A TMDL IS DEVELOPED FOR THE RECEIVING WATERS FOR A POLLUTANT OF CONCERN (SILTATION AND/OR HABITAT ALTERATION), CONSTRUCTION SHALL NOTIFY THE PERMITS SECTION FOR PROPER COORDINATION.

13.4. MAKING PLANS ACCESSIBLE

13.4.1. TDOT WILL RETAIN A COPY OF THIS SWPPP (INCLUDING A COPY OF THE "DOCUMENTATION AND PERMITS" BINDER AT THE CONSTRUCTION SITE (OR OTHER LOCATION ACCESSIBLE TO TDEC AND THE PUBLIC) FROM THE DATE CONSTRUCTION COMMENCES TO THE DATE OF PERMANENT STABILIZATION. TDOT WILL HAVE A COPY OF THE SWPPP AVAILABLE AT THE LOCATION WHERE WORK IS OCCURRING ON-SITE FOR THE USE OF OPERATORS AND THOSE IDENTIFIED AS HAVING RESPONSIBILITIES UNDER THE SWPPP WHENEVER THEY ARE ON THE CONSTRUCTION SITE (7.2.).

13.4.2. PRIOR TO THE INITIATION OF LAND DISTURBING ACTIVITIES AND UNTIL THE SITE HAS MET THE PERMANENT STABILIZATION CRITERIA, TDOT OR THEIR DULY AUTHORIZED REPRESENTATIVE WILL POST A NOTICE NEAR THE MAIN ENTRANCE OF THE CONSTRUCTION SITE WITH THE FOLLOWING INFORMATION (5.3.4.) (7.2.1.):

13.4.2.1. A COPY OF THE NOTICE OF COVERAGE (NOC) WITH THE NPDES PERMIT NUMBER FOR THE PROJECT;

13.4.2.2. THE INDIVIDUAL NAME, COMPANY NAME, E-MAIL ADDRESS (IF APPLICABLE) AND TELEPHONE NUMBER OF THE LOCAL PROJECT SITE OWNER AND OPERATOR CONTACT;

13.4.2.3. A BRIEF DESCRIPTION OF THE PROJECT; AND

13.4.2.4. THE LOCATION OF THE SWPPP.

13.4.3. ALL INFORMATION DESCRIBED IN SECTION 13.4.2 MUST BE MAINTAINED IN LEGIBLE CONDITION. IF POSTING THIS INFORMATION NEAR A MAIN ENTRANCE IS INFEASIBLE DUE TO SAFETY CONCERNS, THE NOTICE SHALL BE POSTED IN A LOCAL BUILDING. THE NOTICE MUST BE PLACED IN A PUBLICLY ACCESSIBLE LOCATION WHERE CONSTRUCTION IS ACTIVELY UNDERWAY AND MOVED AS NECESSARY.

13.5. NOTICE OF TERMINATION (9.0.)

13.5.1. WHEN ALL STORMWATER DISCHARGES FROM CONSTRUCTION ACTIVITIES THAT ARE AUTHORIZED BY THE PERMIT ARE ELIMINATED BY PERMANENT STABILIZATION, THE TDOT REGIONAL ENGINEER WILL SUBMIT A NOTICE OF TERMINATION (NOT) THAT IS SIGNED IN ACCORDANCE WITH THE PERMIT TO THE TDEC CENTRAL OFFICE IN NASHVILLE, TN.

13.5.2. FOR THE PURPOSES OF THE CERTIFICATION REQUIRED BY THE NOT, THE ELIMINATION OF STORMWATER DISCHARGES ASSOCIATED WITH THE CONSTRUCTION ACTIVITY MEANS THE

13.5.2.1. ALL EARTH-DISTURBING ACTIVITIES ON THE SITE ARE COMPLETED AND ALL DISTURBED SOILS AT THE PORTION OF THE CONSTRUCTION SITE WHERE THE OPERATOR HAD CONTROL HAVE BEEN PERMANENTLY STABILIZED; AND

13.5.2.2. ALL CONSTRUCTION MATERIALS, WASTE AND WASTE HANDLING DEVICES, AND ALL EQUIPMENT, AND VEHICLES THAT WERE USED DURING CONSTRUCTION HAVE BEEN REMOVED AND PROPERLY DISPOSED; AND

13.5.2.3. ALL STORMWATER CONTROLS THAT WERE INSTALLED AND MAINTAINED DURING CONSTRUCTION, EXCEPT THOSE THAT ARE INTENDED FOR LONG-TERM USE FOLLOWING TERMINATION OF PERMIT COVERAGE, HAVE BEEN REMOVED; AND

13.5.2.4. ALL POTENTIAL POLLUTANTS AND POLLUTANT GENERATING ACTIVITIES ASSOCIATED WITH CONSTRUCTION HAVE BEEN REMOVED; AND

13.5.2.5. THE PERMITTEE HAS IDENTIFIED WHO IS RESPONSIBLE FOR ONGOING MAINTENANCE OF ANY STORMWATER CONTROLS LEFT ON THE SITE FOR LONG-TERM USE FOLLOWING TERMINATION OF PERMIT COVERAGE; AND

13.5.2.6. TEMPORARY EPSC MEASURES HAVE BEEN OR WILL BE REMOVED AT AN APPROPRIATE TIME TO ENSURE PERMANENT STABILIZATION IS MAINTAINED; AND

13.5.2.7. ALL STORMWATER DISCHARGES ASSOCIATED WITH CONSTRUCTION ACTIVITIES FROM THE IDENTIFIED SITE THAT ARE AUTHORIZED BY A NPDES GENERAL PERMIT HAVE OTHERWISE BEEN ELIMINATED FROM THE PORTION OF THE CONSTRUCTION SITE WHERE THE OPERATOR HAD CONTROL.

13.6. RETENTION OF RECORDS (7.1.)

TDOT WILL RETAIN COPIES OF THE SWPPP, ALL REPORTS REQUIRED BY THE PERMIT, AND RECORDS OF ALL DATA USED TO COMPLETE THE NOTICE OF INTENT FOR THE PROJECT FOR A PERIOD OF AT LEAST THREE (3) YEARS FROM THE DATE THE NOT WAS FILED.

STATE OF TENNESSEE
DEPARTMENT OF TRANSPORTATION

STORMWATER POLLUTION PREVENTION PLAN

TENNESSEE D.O.T.
DESIGN DIVISION
FILE NO.

TYPE	YEAR	PROJECT NO.	SHEET NO.
PSE	2024	BR-STP-107(28)	S-7

14. SITE WIDE/PRIMARY PERMITTEE CERTIFICATION (8.7.5.)

I CERTIFY UNDER PENALTY OF LAW THAT THIS DOCUMENT AND ALL ATTACHMENTS WERE PREPARED BY ME, OR UNDER MY DIRECTION OR SUPERVISION. THE SUBMITTED INFORMATION IS TO THE BEST OF MY KNOWLEDGE AND BELIEF, TRUE, ACCURATE, AND COMPLETE. I AM AWARE THAT THERE ARE SIGNIFICANT PENALTIES FOR SUBMITTING FALSE INFORMATION, INCLUDING THE POSSIBILITY OF FINE AND IMPRISONMENT, AS SPECIFIED IN TENNESSEE CODE ANNOTATED SECTION 39-16-702(a)(4), THIS DECLARATION IS MADE UNDER PENALTY OF PERJURY.

AUTHORIZED TDOT PERSONNEL SIGNATURE (5.3.3.)

Michael W Palmer

PRINTED NAME

Transportation Manager 2

TITLE

5/8/23

DATE

15. SECONDARY PERMITTEE (OPERATOR) CERTIFICATION (8.7.6.)

I CERTIFY UNDER PENALTY OF LAW THAT I HAVE REVIEWED THIS DOCUMENT, ANY ATTACHMENTS, AND THE SWPPP REFERENCED ABOVE. BASED ON MY INQUIRY OF THE CONSTRUCTION SITE OWNER/DEVELOPER IDENTIFIED ABOVE AND/OR MY INQUIRY OF THE PERSON DIRECTLY RESPONSIBLE FOR ASSEMBLING THIS NOI AND SWPPP, I BELIEVE THE INFORMATION SUBMITTED IS ACCURATE. I AM AWARE THAT THIS NOI, IF APPROVED, MAKES THE ABOVE-DESCRIBED CONSTRUCTION ACTIVITY SUBJECT TO NPDES PERMIT NUMBER TNR100000, AND THAT CERTAIN OF MY ACTIVITIES ONSITE ARE THEREBY REGULATED. I AM AWARE THAT THERE ARE SIGNIFICANT PENALTIES, INCLUDING THE POSSIBILITY OF FINE AND IMPRISONMENT FOR KNOWING VIOLATIONS, AND FOR FAILURE TO COMPLY WITH THESE PERMIT REQUIREMENTS. AS SPECIFIED IN TENNESSEE CODE ANNOTATED SECTION 39-16-702(a)(4), THIS DECLARATION IS MADE UNDER PENALTY OF PERJURY.

AUTHORIZED CONTRACTOR PERSONNEL SIGNATURE (5.3.3.)

PRINTED NAME

TITLE

DATE

16. ENVIRONMENTAL PERMITS (1.5.2.)

LIST ALL ENVIRONMENTAL PERMITS AND EXPIRATION DATES FOR PROJECT **(TO BE COMPLETED AT THE ENVIRONMENTAL PRECONSTRUCTION MEETING BY TDOT CONSTRUCTION OR THEIR DULY AUTHORIZED REPRESENTATIVE)**:

ENVIRONMENTAL PERMITS			
PERMIT	**YES OR NO**	**PERMIT OR TRACKING NO.**	**EXPIRATION DATE***
TDEC ARAP	YES	NRS20,317	
CORPS OF ENGINEERS (USACE)	YES	LRN-2020-01273	
TVA 26A	NO		
TDEC CGP	NO		
OTHER:			

*THE TDOT ENVIRONMENTAL DIVISION MUST BE NOTIFIED SIX MONTHS PRIOR TO PERMIT EXPIRATION DATE.

STATE OF TENNESSEE
DEPARTMENT OF TRANSPORTATION

STORMWATER POLLUTION PREVENTION PLAN

TENNESSEE D.O.T.
DESIGN DIVISION
FILE NO.

TYPE	YEAR	PROJECT NO.	SHEET NO.
PSE	2024	BR-STP-107 (28)	S-8

17. OUTFALL TABLE (5.5.1.c, 6.4.1.e, 6.4.1.f)

OUTFALL LABEL	SUB OUT-FALL	STATION CL, LT OR RT	SLOPE WITHIN ROW (%)	STAGE 1 DRAINAGE AREA (AC)	STAGE 2 DRAINAGE AREA (AC)	STAGE 3 DRAINAGE AREA (AC)	SEDIMENT BASIN OR EQUIVALENT MEASURE(S) (YES, NO OR N/A)	SEDIMENT TRAP OR EQUIVALENT MEASURE(S) (YES, NO OR N/A)	RECEIVING RESOURCE (TDOT EBR LABEL) OR OTHER	COMMENTS
1		SR-107 211+00 LT	3.800	0.997	0.074				STR-1	
	1A	SR-107 213+50 LT	3.800	0.745					STR-1	
2		SR-107 210+50 LT	11.220	0.125	0.100				STR-1	
3		SR-107 210+50 RT	4.140	1.100	1.065				STR-1	
4		SR-107 211+00 RT	2.060	6.396	7.547				STR-1	
	4A	SR-107 302+00 LT	2.960	0.176	0.176				STR-1	
	4B	SR-107 215+50 RT	5.880	0.638					STR-1	
	4C	SR-107 214+50 RT	4.620	0.640					STR-1	
	4D	SR-107 214+00 RT	4.500	0.362					STR-1	
	4E	SR-107 216+50 RT	6.600		0.311				STR-1	
	4F	SR-107 214+75 RT	5.570		0.467				STR-1	
	4G	SR-107 214+75 RT	6.690		0.393				STR-1	
	4H	SR-107 214+75 RT	4.500		0.040				STR-1	
	4I	SR-107 214+75 RT	3.330		0.064				STR-1	
	4J	SR-107 213+75 RT	4.110		0.113				STR-1	
	4K	SR-107 213+75 RT	3.190		0.106				STR-1	
	4L	SR-107 213+75 RT	2.350		0.066				STR-1	
	4M	SR-107 212+00 RT	4.070		0.116				STR-1	
	4N	SR-107 212+00 RT	4.010		0.049				STR-1	
	4P	SR-107 212+00 LT	8.680		0.849				STR-1	
	4R	SR-107 212+00 LT	4.010		0.048				STR-1	
	4S	SR-107 212+00 RT	2.050		0.080				STR-1	
	4T	SR-107 212+00 LT	2.050		0.080				STR-1	

STATE OF TENNESSEE
DEPARTMENT OF TRANSPORTATION

STORMWATER POLLUTION PREVENTION PLAN

INDEX OF SHEETS	
SHEET NAME	SHEET NUMBER
UTILITIES INDEX, UTILITIES OWNERS AND UTILITY SHEETS	U1 SERIES
ERWIN UTILITIES ELECTRIC	U2-1 THRU U2-5
CENTURYLINK/LUMEN	U3-1 THRU U3-4
UNICOI WATER	U4-1 THRU U4-5
JOHNSON CITY WATER	U5-1 THRU U5-7
UNICOI GAS	U6-1 THRU U6-3

STATE OF TENNESSEE
DEPARTMENT OF TRANSPORTATION
BUREAU OF ENGINEERING

UNICOI COUNTY

SR 107; (UNICOI DRIVE), BRIDGE OVER NORTH INDIAN CREEK, LM 5.22 IN ERWIN. (IA)

STATE HIGHWAY NO. 107 F.A.H.S. NO. N/A

TENN.	YEAR	SHEET NO.
	2025	U1-1
FED. AID PROJ. NO.	BR-STP-107(28)	
STATE PROJ. NO.	86006-3235-94	
STATE PIN NO.	124631.00	

REV. 11/14/2024: LETTING YEAR CHANGED TO 2025. THIS WILL APPLY TO ALL U-SHEETS ON THIS PROJECT.

MOVE-IN STATE CONTRACT UTILITIES ARE CITY OF JOHNSON CITY WATER, UNICOI WATER, UNICOI COUNTY GAS, ERWIN UTILITIES ELECTRIC AND CENTURYLINK/LUMEN

COMCAST IS IN CONFLICT AND WILL PERFORM RELOCATION WITH COMCAST FORCES. COMCAST RELOCATION WILL FOLLOW ERWIN UTILITIES RELOCATION.

STANDARD LEGEND

EXISTING UTILITIES

POWER	P	POWER POLE	⊕
TELEPHONE	T	TELEPHONE POLE	⊕
WATER	W	POWER/TELEPHONE POLE	⊕
CABLE TV	C	MANHOLE	⌬
UNDERGROUND TELEPHONE	T (UG)	WATER METER	W.M. □
GAS	G	WATER VALVE	W.V. □ ⊗
UNDERGROUND POWER	P (UG)	FIRE HYDRANT	F.H.
UNDERGROUND FIBER OPTIC	F (UG)	LIGHT POLE	⊕—○
STORM	ST	ANCHOR	—◁
SEWER	SA		

PROPOSED UTILITIES

POWER		POWER POLE	●
TELEPHONE	T	TELEPHONE POLE	●
WATER	W	POWER/TELEPHONE POLE	●
CABLE TV	C	WATER VALVE	⋈
UNDERGROUND TELEPHONE	T (UG)	GAS VALVE	G.V. ■
GAS	G	ANCHOR	—◁
UNDERGROUND POWER	P (UG)		
UNDERGROUND FIBER OPTIC	F (UG)		
STORM	ST		
SEWER	SA		
OVERHEAD GUY	G		

UTILITY OWNERS AND CONTACTS:

WATER:	CITY OF JOHNSON CITY 601 E. MAIN STREET JOHNSON CITY, TN 37605-2150 TOM WITHERSPOON TWITHERSPOON@JOHNSONCITYTN.ORG DIRECTOR OF WATER AND SEWER SERVICES PHONE: (423)-434-6062	WATER:	UNICOI WATER UTILITY DISTRICT P.O. BOX 8 UNICOI, TN 37692 TOM BRYANT TOM.BRYANT@UNICOIWATER.COM PHONE: (423)-743-6202
GAS:	UNICOI COUNTY GAS UTILITY DISTRICT 1414 N. MAIN AVENUE ERWIN, TN 37650 TIM WHITSON TWHITSON@UCGUD.COM PHONE: (423)-743-6793	ELECTRIC:	ERWIN UTILITIES 244 LOVE STREET UNICOI, TN 37692 KIP LEMMON KLEMMON@E-U.CC PHONE: (423)-743-1408
TELEPHONE:	CENTURYLINK/LUMEN 101 N ROAN STRET JOHNSON CITY, TN 37615 ANDREW F. ICE andrew.f.ice@centurylink.com PHONE: (423)-461-7724	CABLE:	COMCAST 1794 OLD GRAY STATION RD JOHNSON CITY, TN 37615 KEVIN WALDROP KEVIN_WALDROP2@CABLE.COMCAST.COM PHONE: (423)-232-9775

NOTE TO CONTRACTORS
CONTRACTOR TO FOLLOW ALL ADA RULES PERTAINING TO SIDE WALKS

NOTE TO CONTRACTORS
DIRECTIONAL BORING MUST BE PLACED A MINIMUM OF 50' AWAY FROM STREAM BANKS.

UNDERGROUND UTILITIES NOTE
ALL UNDERGROUND UTILITIES MUST BE DIRECTIONAL BORED UNDER ALL STREAMS IDENTIFIED IN THE PLANS, UNLESS OTHERWISE NOTED ON THE UTILITIES SHEETS

SPECIAL NOTES

SOME UTILITIES CAN BE LOCATED BY CALLING THE TENNESSEE ONE-CALL SYSTEM, INC. AT 1-800-351-1111

PLEASE REFER TO UTILITY SHEETS FOR DETAILS AND SPECIFICATIONS

11/16/2021 2:52:08 PM
Z:\00212-0021.6\03-Drawings\03-Utilities\B Date U1\U1-1.sht

ELECTRIC UTILITY INDEX	
SHEET NAME & LEGEND	SHEET NO
UTILITY INDEX	U2-1
FOOTNOTES	U2-2
STATION 205+00.00 TI STATION 210+62.00	U2-3
STATION 210+62.00 TO 216+50.00 (SR-107) STATION 300+00.00 TO 303+52.00	U2-4
SR-107	U2-5

ERWIN UTILITIES

ELECTRIC UTILITY & UTILITY FIBER RELOCATION
STATE PROJECT NUMBER: 86006-3235-94
FEDERAL PROJECT NUMBER: BR-STP-107(28)
COUNTY: UNICOI
PIN NUMBER: 124631.00
(UNICOI DRIVE) BRIDGE OVER NORTH INDIAN CREEK,
LM 5.22 IN ERWIN. (IA) ROUTE: SR-107

TYPE	YEAR	PROJECT NO.	SHEET NO.
CONST	2024	86006-3235-94	U2-1

*REVISION 1/18/2024:
RELOCATED POLE 5 OUT OF THE HAUL ROAD. CHANGED POLE 5 FROM A 55 FT POLE TO 60 FT POLE.

*REVISION 9/5/2024:
SHEET U2-1 - REMOVED "BUY AMERICA DESIGNATION" FROM THE ESTIMATED UTILITY QUANTITIES.

SHEET U2-2 - REMOVED "BUY AMERICA DESIGNATION LEGEND" FROM THE ESTIMATED UTILITY QUANTITIES.

ESTIMATED UTILITY QUANTITIES

ITEM NO.	DESCRIPTION	UNIT	QTY	FOOTNOTE
790-04.07	POLE 45FT CLASS 2 METAL	EACH	5	1
790-05.02	POLE 50FT CLASS 2 WOOD	EACH	1	1
790-05.06	POLE 50FT CLASS 2 METAL	EACH	2	1
790-06.06	POLE 55FT CLASS 2 METAL	EACH	1	1
790-20.01	POLE 35FT CLASS 4 METAL	EACH	2	1
790-20.02	POLE 55FT CLASS H5 METAL	EACH	1	1
790-07.18	POLE 60FT CLASS H5 METAL	EACH	1	1
790-20.30	TOP EXISTING POLE	EACH	13	3
790-21.09	1Ø PRIMARY TAP 15KV	EACH	1	2
790-21.11	1Ø CROSSARM DEADEND 15KV	EACH	1	2
790-21.12	1Ø CROSSARM DDE 15KV	EACH	1	2
790-25.06	3Ø CROSSARM DBL 15KV	EACH	2	2
790-25.12	3Ø CROSSARM DBL 10FT PRIM SUP 15KV	EACH	4	2
790-25.21	3Ø CROSSARM DEADEND SGL 15KV	EACH	1	2
790-25.23	3Ø CROSSARM DDE 15KV	EACH	4	1
790-31.02	SERVICE ASSEMBLY-POLE TYPE	EACH	9	1
790-31.04	SERVICE CONDUCTOR 6 AL DUPLEX	EACH	61	1
790-31.11	SERVICE CONDUCTOR 2 AL TRIPLEX	EACH	549	1
790-32.03	DOWN GUY - THROUGH BOLT ST PL	EACH	14	1
790-32.07	OH GUY - THROUGH BOLT TYPE	EACH	7	1
790-32.23	GUY GUARD	EACH	10	1
790-33.06	PLATE TYPE ANCHOR 10,000LB-12,000LB	EACH	2	1
790-33.25	SCREW TYPE ANCHOR 15,000LB	EACH	4	1
790-33.26	SCREW TYPE ANCHOR 28,000LB	EACH	9	1
790-33.27	SCREW TYPE ANCHOR 32,000LB	EACH	3	1
790-36.10	TRANSFER - LIGHT ASSEMBLY	EACH	2	1

ESTIMATED UTILITY QUANTITIES

ITEM NO.	DESCRIPTION	UNIT	QTY	FOOTNOTE
790-36.13	TRANSFER STREET LIGHT	EACH	1	1
790-36.14	TRANSFER CONDUCTOR	EACH	52	1
790-36.15	TRANSFER FRAMING/ASSOCIATED APPARATUS	EACH	13	1
790-40.01	OH COND 4 7/1 ACSR/SWANATE	L.F.	160	1
790-40.03	OH COND 1/0 6/1 ACSR/RAVEN	L.F.	2208	1
790-40.06	OH COND 4/0 6/1 ACSR/PENGUIN	L.F.	6624	1
790-41.46	UG SEC COND 1/0 AL TPLX	L.F.	200	1
790-42.08	2IN DIA PVC PIPE	L.F.	230	1 & 3
790-42.17	2 DUCT BANK @ 36IN-48IN DEPTH	L.F.	130	1 & 3
790-43.46	SECONDARY PULLBOX LARGE	EACH	2	1 & 3
790-43.50	SECONDARY RISER W/ 2IN CONDUIT	EACH	2	1
790-68.01	POLE GROUND ROD TYPE	EACH	13	1
790-68.10	MISCELLANEOUS ASSEMBLIES	EACH	25	1
790-68.11	DEADEND SHOE	EACH	12	1
790-69.41	EXTENSION LINK - EPOXY - 8FT	EACH	2	1
790-70.20	STREET LIGHT (70W LED)	EACH	2	1
790-72.07	GUY FACTORY FORMED WITH TIMBLE CLEVIS	EACH	9	1
790-74.20	108-144 FIBER (INSTALLATION ONLY)	L.F.	4219	1 & 9
790-74.22	288-432 FIBER (INSTALLATION ONLY)	L.F.	2016	1 & 9
790-74.31	FIBER TANGENT ASSM	EACH	10	1 & 9
790-74.32	FIBER DEADEND ASSM	EACH	46	1 & 9
790-74.35	FIBER STORAGE DOUBLE LOOP	EACH	12	1 & 9
790-98.01	REMOVE WIRE	L.F.	15,376	SEE FOOTNOTE 9 - THIS ALSO INCLUDES SECONDARY WIRE AND MAINLINE CONDUCTORS
790-98.02	REMOVE POLES	EACH	13	INCLUDES MAINLINE POLES, SERVICE POLES, STUB POLES
790-98.03	REMOVE FRAMING/ASSOCIATED APPARATUS	EACH	192	INCLUDES CROSSARMS, TRANSFORMERS, SWITCHES, ETC.
790-98.20	TREE AND BRUSH REMOVAL OFF ROW	L.S.	1	8 - INCLUDES ALL TRIMMING AND DISPOSAL

ELECTRIC UTILITY CONTACT INFORMATION:

KIP LEMMON
ERWIN UTILITIES
P.O. BOX 817
ERWIN, TN 37650
PHONE: (423) 743-1408

DESIGNED BY STAKING SERVICES COMPANY FOR ERWIN UTILITIES
BRADLEY C. YOUNG
PHONE: (256) 998-1898

SEALED BY

COORDINATES ARE NAD 83(1995), ARE DATUM ADJUSTED BY THE FACTOR OF 1.00012 AND TIED TO THE TGRN. ALL ELEVATIONS ARE REFERENCED TO THE NAVD 1988 WITH GEOID 12B.

STATE OF TENNESSEE
DEPARTMENT OF TRANSPORTATION

UTILITY RELOCATION
ERWIN UTILITIES
STAKING SERVICES COMPANY

SHEET INDEX, DESCRIPTION AND GENERAL INFORMATION
SCALE 1" = 50'

FOOTNOTES TO BE INCLUDED ON PLANS	
FOOTNOTE 1: INCLUDES ALL MATERIALS, LABOR AND EQUIPMENT FOR COMPLETE INSTALLATION INCLUDING BUT NOT LIMITED TO SETUP, TRAFFIC CONTROL, DIGGING HOLE, FILLING HOLE, BLASTING, BUTT WRAP OR SINGLE GROUND ROD, MGNV, NUMBERING POLE.	**FOOTNOTE 5:** INCLUDES ALL MATERIALS AND EQUIPMENT INCLUDING BUT NOT LIMITED TO MOUNTING HARDWARE, BONDING/GROUNDING, STRAND SIZE AS INDICATED IN SPECS., AND LOOPS.
FOOTNOTE 2: ASSEMBLIES OF SIMILAR CONSTRUCTION BUT DIFFERING ONLY IN USE OF EPOXY VS. PORCELAIN INSULATORS OR FIBERGLASS VS. WOOD CROSSARMS OR LACK OF NEUTRAL ASSEMBLY SHOULD BE GROUPED WITHIN THE SAME ITEM.	**FOOTNOTE 6:** INCLUDES ALL LABOR INCLUDING TRAFFIC CONTROL AND SETUP, REMOVAL OF LID AND COLLARS, BACKFILL WITH GRAVEL.
FOOTNOTE 3: INCLUDES ALL MATERIALS, LABOR AND EQUIPMENT FOR COMPLETE INSTALLATION INCLUDING SETUP, TRAFFIC CONTROL, BEDDING, BACKFILL, AND SURFACE RESTORATION.	**FOOTNOTE 7:** INCLUDES ALL MATERIALS, LABOR AND EQUIPMENT INCLUDING BUT NOT LIMITED TO TRAFFIC CONTROL, BONDING/GROUNDING, AND TENSIONING.
FOOTNOTE 4: INCLUDES ALL MATERIALS, LABOR AND EQUIPMENT INCLUDING BUT NOT LIMITED TO SETUP, TRAFFIC CONTROL, RODDING DUCT AND PULLING IN INNERDUCT.	**FOOTNOTE 8:** TREE AND BRUSH REMOVAL OFF ROW. CONSIST OF CUTTING DOWN TREES AND REMOVING ALL DEBRIS FOR TEMPORARY LINE LOCATION.
FOOTNOTE 9: THE EXISTING ERWIN ADSS FIBER WILL BE TRANSFERRED TO THE NEW POLES BY UTILIZING THE ADSS SLACK IN THE STOREAGE LOOPS (SNO-SHOES). THE EXISTING HARDWARE WILL TRANSFER WITH THE ADSS FIBER. THIS WILL INCULDE THE TEMPORARY TRANSFER AND MOVING THE ADSS BACK TO	

*CONSTRUCTION NOTES:
THERE WILL BE THREE PHASES OF OVERHEAD LINE CONSTRUCTION TO COMPLETE THIS PROJECT.

ERWIN UTILITIES FIBER WILL HAVE TO BE CONSTRUCTED IN THE SAME MANNER IS THE PRIMARY CONDUCTOR. THE EXISTING FIBER WILL BE TRANSFERRED. NO NEW FIBER INSTALLATION

PHASE 1:
- INSTALL POLES 1, 2, 3, 12, 13, 14, 24 & 26. INSTALL PERMANENT CONDUCTOR BETWEEN POLES 1 TO 3. INSTALL TEMPORARY CONDUCTOR BETWEEN POLES 3, 24 & 26. RETIRE EXISTING CONDUCTOR BETWEEN POLES 3 AND 26 AND REMOVE POLE 18.
- POLE 26 TRANSFER THE UNDERGROUND SECONDARY SERVICE AND THE TRANSFORMER FROM POLE 19 TO THIS POLE. RETIRE POLE 19.
- COMPLETE ALL CONSTRUCTION BETWEEN POLES 1 TO 3.

PHASE 2:
- INSTALL POLES 5, 6, 8, 9 & 10. INSTALL THE NEW CONDUCTOR BETWEEN POLES 5 TO 7. TRANSFER THE TEMPORARY CONDUCTOR FROM POLE 26 TO POLE 5. LEAVING THE TEMPORARY CONDUCTOR FEEDING BACK TO POLE 24. TRANSFER THE UNDERGROUND SECONDARY SERVICE AND THE TRANSFORMER FROM POLE 26 TO POLE 5. COMPLETE ALL CONSTRUCTION BETWEEN POLES 5 TO 7 AND BETWEEN POLES 6 TO 10.

PHASE 3:
- INSTALL POLE 4 AND PULL IN THE NEW CONDUCTOR BETWEEN POLES 3 TO 5.

TYPE	YEAR	PROJECT NO.	SHEET NO.
CONST	2024	86006-3235-94	U2-2

TDOT STANDARD GENERAL NOTES:

1. Except for erosion sediment control items, no Roadway or Bridge Items shall be utilized to compensate for work methods associated with and/or specified for the utility installation, even though the same or similar roadway or bridge materials may have been called for in the Utility Specifications.
2. All materials, methods, and/or integral materials outlined in the utility specifications or drawinfgs necessary to provide a complete and functional installation must be included in the Unit Price for the associated Utility Work Item.
3. The contractor must maintain all services during the construction of the relocated facility. Any costs associated with installation of required temporary service lines due to the roadway construction sequence of work(i.e., cuts, fills, phasing, etc.) shall be included in the cost of the permanent utility items. (Note to Utility: The utility relocation plans shall provide to the contractor the Utility's requirements for temporary tie-ins (including necessary testing and sterilization to accomplish the tie-in) and also any restrictions for taking lines out of service. If a temporary line will be a major item of work, a specific temporization plan and item must be included in the Utility's plans.
4. It shall be the responsibility of the Prime Contractor's surveyor to lay out all the facilities being relocated within the contract.
5. For buried utilities, the Prime contractor or subcontractor shall be required to provide to the Utility upon cpmpletion of the Utility's relocation work a set of as-built drawings for their records. These as-built drawings should be prepared as the job progresses to ensure their accuracy.
6. Where erosion control measures are needed for the utility relocation work occurring inside or outside State right-of-way, the contractor shall submit to the TDOT Project Suppervisor for approval a proposed erosion and sediment control plan prior to beginning work. TDOT approval must be received before the erosion control pay items for roadway construction can be used for any additional erosion control measures required for the utility relocation work.
7. Driveway, sidewalk and roadway temporary restoration shall be part of the in-place cost of placing the utility item within the ROW.

PLAN VIEW LEGEND

N:	NEW INSTALL ITEMS
R:	REMOVAL ITEMS
TEMP:	TEMPORARY ITEMS
TR:	TRANFER ITEM
——–——	1Ø CONDUCTOR
——–––——	3Ø CONDUCTOR
(——	ANCHOR
●	EXISTING POLE
○	NEW POLE
◉	TEMPORARY POLE
◒	POLE CHANGEOUT IN PLACE
N100'	NEW CONDUCTOR
(100')	REMOVAL CONDUCTOR
▨	PRIVATE EASEMENT ENCROACHMENT AREA

SEALED BY

COORDINATES ARE NAD 83(1995), ARE DATUM ADJUSTED BY THE FACTOR OF 1.00012 AND TIED TO THE TGRN. ALL ELEVATIONS ARE REFERENCED TO THE NAVD 1988 WITH GEOID 12B.

STATE OF TENNESSEE
DEPARTMENT OF TRANSPORTATION

UTILITY RELOCATION
ERWIN UTILITIES
STAKING SERVICES COMPANY

SHEET INDEX, DESCRIPTION AND GENERAL INFORMATION
SCALE 1" = 50'

**SEE NOTES ON SHEET U2-2 FOR PHASE 1, 2 & 3 CONSTRUCTION DESRCIPTION

86006-3235-94
BEGIN BR-STP-107(28)
STA. 207+75.00 (CONST.)
N 697293.8548
E 3045798.5115

205

210

(1) NOTE: SET POLE 6 1/2 FT DEEP. FRAME ONE E2-2 NINE INCHES BELOW THE FIBER ATTACHMENT. INSTALL TEMPORARY GUYS AND ANCHORS FOR NEW WIRE INSTALLATION.
TEMP: E1-2, TG-11A, (2) F1-4S
N: 45-2 STEEL, C8-8F, M2-1S, (2) E2-2, (3) M5-5,
N: (2) 144 CT TANGENT, 288 CT TANGENT
R: 40-4, C2-A, M2-1, (3) E, TG-11A, (2) E3-10, (3) F,
R: (2) 144 CT TANGNET, 288 CT TANGENT

(12) NOTE: SET POLE 5 1/2 FT DEEP.
N: 35-4 STEEL, M2-1S, (2) E1-2, E3-10, F1-5S

(2) NOTE: SET POLE 6 1/2 FT DEEP. FRAME ONE E2-2 NINE INCHES BELOW THE FIBER.
N: 45-2 STEEL, C2-2F, A7-8F, M2-1S, (2) E2-2, K11C,
N: 38' #2 TRIPLEX, 145' 1/0 ACSR, 435' 4/0 ACSR,
N: (2) 288 CT DEADEND, 144 CT TANGENT,
N: (2) 144 CT DEADEND, (2) SNO-SHOE,
N: 290' 144-FIBER (INSTALL ONLY),
N: 145' 288-FIBER (INSTALL ONLY),

(15) NOTE: TRANSFER FIBER TO POLE 2.
TR (TO POLE 2): G136-15, (2) M5-9, (2) FLOOD LIGHTS, FIBER SPLICE BOX
R: 40-4, C2-A, A5-2, M2-1, E, E3-10, F, (2) FGI,
R: K11C, 39' #2 TRIPLEX, 136' #2 CU SOLID, 408' 4/0 ACSR,
R: (2) 288 CT DEADEND, 144 CT TANGENT,
R: (2) 144 CT DEANDEND, (2) SNO-SHOE,
R: 272' 144-FIBER (TO BE TRANSFERRED),
R: 136' 288-FIBER (TO BE TRANSFERRED),

(13) NOTE: FRAME THE E2-2 AND E1-2 ONE FOOT BELOW THE A8-8F CROSSARM BRACKET.
N: A8-8F, (2) E1-2, E3-10, F1-5S, 160' #4 ACSR
R: A6, M5-2, 160' #4 ACSR

(3) NOTE: SET POLE 6 1/2 FT DEEP. FRAME THE C8-8F IN THE BI-SECT OF THE PERMANENT LINE ANGLE, ON THE NORTH SIDE OF THE POLE. FRAME ONE E2-2 NINE INCHES BELOW THE FIBER ATTACHMENT.
TEMP: TG-11A, F1-5S (FOR PULLING IN PERMANENT WIRE)
N: 45-2 STEEL, C8-8F, M2-1S, (2) E2-2, (2) K11C, (3) M5-5,
N: 63' #2 TRIPLEX, 126' 1/0 ACSR, 378' 4/0 ACSR,
N: (2) 288 CT DEADEND, (4) 144 CT DEADEND,
N: 252' 144-FIBER (INSTALL ONLY),
N: 126' 288-FIBER (INSTALL ONLY),
NEW ITEMS FOR PERMANENT INSTALLATION.
N: (3) M5-20, 1/0 ACSR SDE, (3) 4/0 ACSR SLDS

R: TG-11A, F1-5S, (3) M5-20, 1/0 ACSR SDE, (3) 4/0 ACSR SLDS

(24) NOTE: SET POLE 7 FT DEEP. TRANSFER FIBER TO POLE 4 ONCE THE BRIDGE CONSTRUCTION IS COMPLETE.
TEMP: 50-2 WOOD, C2-2F, M2-1S, (2) E1-2, E3-10, F1-5S,
TEMP: 200' 1/0 ACSR, 600' 4/0 ACSR, 288 CT TANGENT,
TEMP: (2) 144 CT TANGENT, 400' 144-FIBER (INSTALL ONLY),
TEMP: 200' 288-FIBER (INSTALL ONLY), (6) SNO-SHOE
R: 50-2 WOOD, C2-2F, M2-1, (2) E1-2, E3-10, F1-5S,
R: 200' 1/0 ACSR, 600' 4/0 ACSR, 288 CT TANGENT,
R: (2) 144 CT TANGENT, 400' 144-FIBER (TO BE TRANS.),
R: 200' 288-FIBER (TO BE TRANS.), (6) SNO-SHOE

(16) NOTE: TRANSFER FIBER TO POLE 3.
TR (TO POLE 3): G136-10, M5-9
R: 40-4, C2-A, M2-1, E2-2, (2) K11C, 148' #2 CU SOLID,
R: 444' 4/0 ACSR, 288 CT TANGENT,
R: (2) 144 CT TANGENT, 296' 114-FIBER (TO BE TRANS.),
R: 148' 288-FIBER (TO BE TRANSFERRED),

(14) NOTE: SET POLE 6 1/2 FT DEEP.
N: 35-4 STEEL, M2-1S, (2) E1-2, E3-10, F1-5S, K11C,
N: 61' #6 DUPLEX, SECURITY LIGHT (LED)

(17) R: 35-5, E, E3-10, F, K11C, 71' #6 DULEX,
R: SECURITY LIGHT (HPS)

(4) *NOTE: SET THIS POLE ONCE THE BRIDGE CONSTRUCTION HAS BEEN COMPLETED.
NOTE: SET POLE 8 FT DEEP. TRANSFER FIBER FROM POLE 24.
N: 50-2 STEEL, C1-3F, M2-1S, 153' 1/0 ACSR,
N: 459' 4/0 ACSR, (2) 288 CT DEADEND,
N: (4) 144 CT DEADEND, (6) SNO-SHOE
N: 296' 144-FIBER (INSTALL ONLY),
N: 148' 288-FIBER (INSTALL ONLY),

(18) NOTE: TRANSFER FIBER TO POLE 24.
R: 40-4, C2-A, M2-1, (2) E, F, 148' #2 CU SOLID,
R: 444' 4/0 ACSR, (2) 144 CT TANGENT,
R: (2) 288 CT DEADEND, (2) SNO-SHOE
R: 296' 144-FIBER (TO BE TRANSFERRED),
R: 148' 288-FIBER (TO BE TRANSFERRED),

86006-2235-94
BEGIN BR-STP-107(28)
STA. 208+00.00 (R.O.W.)
N 697318.6582
E 3045801.6275

TYPE	YEAR	PROJECT NO.	SHEET NO.
CONST	2024	86006-3235-94	U2-3

MATCHLINE SHEET U2-4

SEALED BY

COORDINATES ARE NAD 83(1995), ARE DATUM ADJUSTED BY THE FACTOR OF 1.00012 AND TIED TO THE TGRN. ALL ELEVATIONS ARE REFERENCED TO THE NAVD 1988 WITH GEOID 12B.

STATE OF TENNESSEE
DEPARTMENT OF TRANSPORTATION

UTILITY RELOCATION
ERWIN UTILITIES
STAKING SERVICES COMPANY

SHEET INDEX, DESCRIPTION AND GENERAL INFORMATION
SCALE 1" = 50'

19-SEP-2020 10:41
\\tdot01\res\002\tdot\data\erwus101\Shared\SURVDES\Design\PROJECTS\Unicoi SR 107\004\Art

TYPE	YEAR	PROJECT NO.	SHEET NO.
CONST	2024	86006-3235-94	U2-4

26 NOTE: SET POLE 11 FT DEEP. TRANSFER FIBER FROM POLE 19.
TR (TO POLE 5): G136-15 CONV., M5-6, M5-9, FIBER SPLICE BOX
TEMP: 185' 1/0 ACSR, 555' 4/0 ACSR, 370' 144-FIBER (INSTALL ONLY), 185' 288-FIBER (INSTALL ONLY),
N: 60-H5 STEEL, C8-8F, M2-1S, SECONDARY RISER, (3) M5-5, SEC. BOX, 50' SECONDARY TRENCHING, 100' 1/0 URD TRIPLEX,
N: (4) 144 CT DEADEND, (2) 288 CT DEADEND
R: 60-H5 STEEL, C8-8F, M2-1S, SECONDARY RISER, (3) M5-5, SEC. BOX, 100' 1/0 URD TRIPLEX,
R: (4) 144 CT DEADEND, (2) 288 CT DEADEND

5 NOTE: SET POLE 11 FT DEEP. TRANSFER FIBER FROM POLE T5.
TEMP: 202' 1/0 ACSR, 606' 4/0 ACSR, 404' 144-FIBER (INSTALL ONLY),
TEMP: 202' 288-FIBER (INSTALL ONLY), TG-11A, F1-5S
N: 55-H5 STEEL, C8-8F, M2-1S, 243' 1/0 ACSR, 729' 4/0 ACSR, SECONDARY RISER, (3) M5-5,
N: SEC. BOX, 80' SECONDARY TRENCHING, 100' 1/0 URD TRIPLEX, (4) 144 CT DEADEND,
N: (2) 288 CT DEADEND, 492' 144-FIBER (INSTALL ONLY), 246' 288-FIBER (INSTALL ONLY)
**NEW ITEMS FOR PERMANENT INSTALLATION.
N: (3) M5-20, 1/0 ACSR SDE, (3) 4/0 ACSR SLDS
R: (3) M5-20, 1/0 ACSR SDE, 4/0 ACSR SLDS,
R: 404' 144-FIBER (TO BE TRANSFERRED), 202' 288-FIBER (TO BE TRANSFERRED)

6 NOTE: SET POLE 8 1/2 FT DEEP. FRAME THE C7-8F 3 FT BELOW THE C1-3F.
TRANSFER FIBER FROM POLE 20. INSTALL THE E1-2 NINE INCHES BELOW
THE FIBER ATTACHMENT WITH THE F1-4S IN THE INSIDE ANCHOR POSITION.
N: 55-2 STEEL, C1-3F, C7-8F, M2-1S, E1-2, TG-11B, (2) E3-10, F1-4S, F1-7S,
N: (2) K11C, M5-5, 125' #2 TRIPLEX, 218' 1/0 ACSR, 654' 4/0 ACSR,
N: (3) 288 CT DEADEND, (6) 144 CT DEADEND, 436' 144-FIBER (INSTALL ONLY),
N: 218' 288-FIBER (INSTALL ONLY), SNO-SHOE

7 NOTE: INSTALL TEMPORARY GUY AND
ANCHOR FOR PULLING NEW CONDUCTOR.
TEMP: TG-11B, F1-5S
N: E2-2, FGI (96"), M5-27, (3) M5-20,
N: 1/0 ACSR SDE, (3) 4/0 ACSR SLDS,
N: 137' 1/0 ACSR, 411' 4/0 ACSR
N: 274' 144-FIBER (INSTALL ONLY)
N: 137' 288-FIBER (INSTALL ONLY)
R: TG-11B, F1-5S, J8, (3) M5-20,
R: (3) 4/0 ACSR SLDS, 145' 1/0 ACSR,
R: 435' 4/0 ACSR, 290' 144-FIBER (TO BE TRANSFERRED),
R: 145' 288-FIBER (TO BE TRANSFERRED),

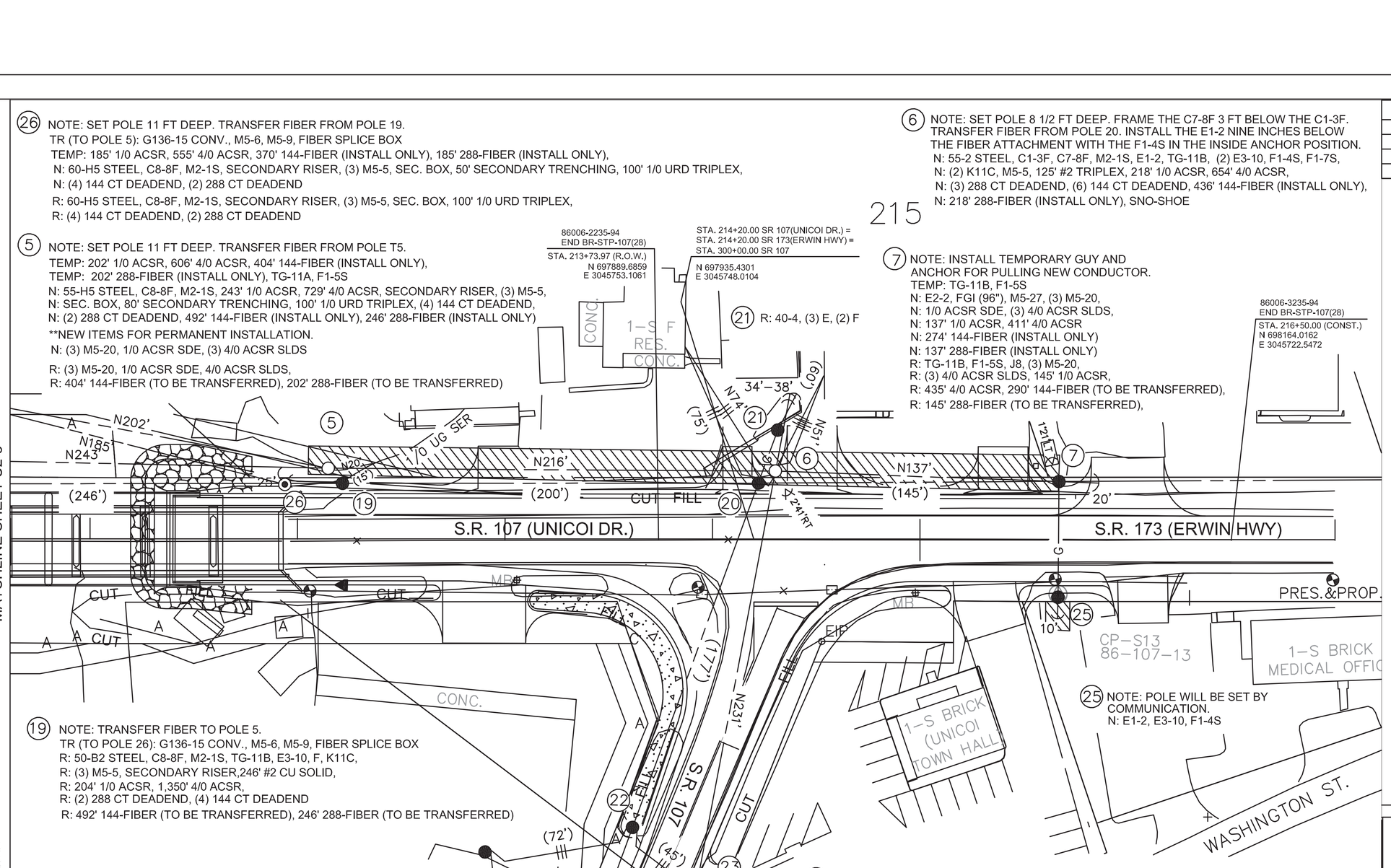

19 NOTE: TRANSFER FIBER TO POLE 5.
TR (TO POLE 26): G136-15 CONV., M5-6, M5-9, FIBER SPLICE BOX
R: 50-B2 STEEL, C8-8F, M2-1S, TG-11B, E3-10, F, K11C,
R: (3) M5-5, SECONDARY RISER,246' #2 CU SOLID,
R: 204' 1/0 ACSR, 1,350' 4/0 ACSR,
R: (2) 288 CT DEADEND, (4) 144 CT DEADEND
R: 492' 144-FIBER (TO BE TRANSFERRED), 246' 288-FIBER (TO BE TRANSFERRED)

20 NOTE: TRANSFER FIBER TO POLE 6.
TR (TO POLE 6): G136-15, STREET LIGHT, (2) FIBER SPLICE BOX,
R: 50-B2 STEEL, C1-2F, C7-8F, M2-1S, (3) E2-2, (3) FGI,
R: K11C, 135' #2 TRIPLEX, 200' 1/0 ACSR,
R: 600' 4/0 ACSR, (3) 288 CT DEADEND,
R: (6) 144 CT DEADEND, SNO-SHOE,
R: 400' 144-FIBER (TO BE TRANSFERRED)
R: 200' 288-FIBER (TO BE TRANSFERRED)

25 NOTE: POLE WILL BE SET BY
COMMUNICATION.
N: E1-2, E3-10, F1-4S

22 NOTE: TRANSFER FIBER TO POLE 8.
TR: (TO POLE 8) G136-37.5 CONV., M5-9
R: 45-3, C1-2F, M2-1, (3) E, (3) E3-10, F, (2) K11C, 72' #2 TRIPLEX,
R: 177' 1/0 ACSR, 531' 4/0 ACSR, STREET LIGHT,
R: 288 CT TANGENT, (2) 144 CT TANGENT, 354' 144-FIBER (TO BE TRANSFERRED),
R: 177' 288-FIBER (TO BE TRANSFERRED),

23 NOTE: TOP POLE 1 FOOT ABOVE CABLE DROP.
R: J10, SECURITY LIGHT, 134' #6 DUPLEX, 84' #2 TRIPLEX

8 NOTE: SET POLE 8 FT. DEEP. TRANFER FIBER FROM POLE 22.
FRAME THE E1-2 NINE INCHES BELOW THE NEUTRAL.
N: 50-2 STEEL, C2-2FT, M2-1S, E1-2, TG-11B, GA-3, E3-10, F1-5S, (2) K11C,
N: 252' #2 TRIPLEX, 231' 1/0 ACSR, 693' 4/0 ACSR, SECURITY LIGHT (LED),
N: (2) 288 CT DEADEND, (4) 144 CT DEADEND, 462' 144-FIBER (INSTALL ONLY),
N: 231' 288-FIBER (INSTALL ONLY),

MATCHLINE SHEET U2-3

MATCHLINE SHEET U2-5

18-SEP-2020 10:41
\\tdot01\nas002\dot\state.tn.us\101\Shared\SURVEDES\Design\PROJECTS\Unicoi\SR 107\004.srf

SEALED BY

COORDINATES ARE NAD 83(1995), ARE
DATUM ADJUSTED BY THE FACTOR
OF 1.000012 AND TIED TO THE TGRN.
ALL ELEVATIONS ARE REFERENCED
TO THE NAVD 1988 WITH GEOID 12B.

STATE OF TENNESSEE
DEPARTMENT OF TRANSPORTATION

UTILITY RELOCATION
ERWIN UTILITIES
STAKING SERVICES COMPANY

SHEET INDEX, DESCRIPTION AND
GENERAL INFORMATION
SCALE 1" = 50'

MATCHLINE SHEET U2-4

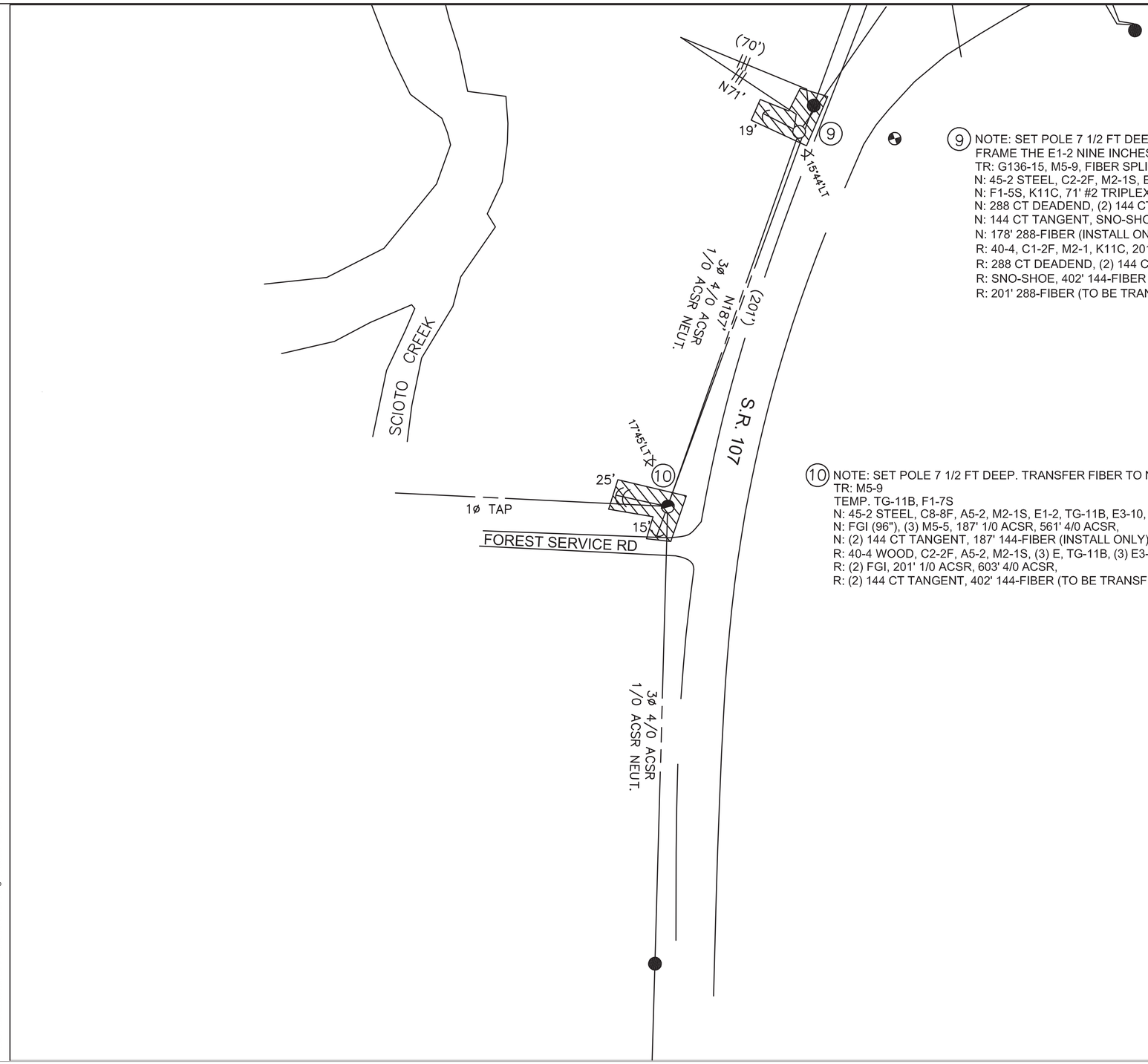

9 NOTE: SET POLE 7 1/2 FT DEEP. TRANSFER FIBER TO NEW POLE.
FRAME THE E1-2 NINE INCHES BELOW THE NEUTRAL.
TR: G136-15, M5-9, FIBER SPLICE BOX
N: 45-2 STEEL, C2-2F, M2-1S, E1-2, TG-11B, E3-10, GA-3,
N: F1-5S, K11C, 71' #2 TRIPLEX, 178' 1/0 ACSR, 534' 4/0 ACSR,
N: 288 CT DEADEND, (2) 144 CT DEADEND,
N: 144 CT TANGENT, SNO-SHOE, 356' 144-FIBER (INSTALL ONLY)
N: 178' 288-FIBER (INSTALL ONLY)
R: 40-4, C1-2F, M2-1, K11C, 201' 1/0 ACSR, 603' 4/0 ACSR,
R: 288 CT DEADEND, (2) 144 CT DEADEND, 144 CT TANGENT,
R: SNO-SHOE, 402' 144-FIBER (TO BE TRANSFERRED),
R: 201' 288-FIBER (TO BE TRANSFERRED)

10 NOTE: SET POLE 7 1/2 FT DEEP. TRANSFER FIBER TO NEW POLE.
TR: M5-9
TEMP. TG-11B, F1-7S
N: 45-2 STEEL, C8-8F, A5-2, M2-1S, E1-2, TG-11B, E3-10, F1-7S,
N: FGI (96"), (3) M5-5, 187' 1/0 ACSR, 561' 4/0 ACSR,
N: (2) 144 CT TANGENT, 187' 144-FIBER (INSTALL ONLY)
R: 40-4 WOOD, C2-2F, A5-2, M2-1S, (3) E, TG-11B, (3) E3-10, (4) F,
R: (2) FGI, 201' 1/0 ACSR, 603' 4/0 ACSR,
R: (2) 144 CT TANGENT, 402' 144-FIBER (TO BE TRANSFERRED)

TYPE	YEAR	PROJECT NO.	SHEET NO.
CONST	2024	86006-3235-94	U2-5

SEALED BY

COORDINATES ARE NAD 83(1995), ARE DATUM ADJUSTED BY THE FACTOR OF 1.00012 AND TIED TO THE TGRN. ALL ELEVATIONS ARE REFERENCED TO THE NAVD 1988 WITH GEOID 12B.

STATE OF TENNESSEE
DEPARTMENT OF TRANSPORTATION

UTILITY RELOCATION
ERWIN UTILITIES
STAKING SERVICES COMPANY

SHEET INDEX, DESCRIPTION AND GENERAL INFORMATION
SCALE 1" = 50'

18-SEP-2020 10:41
\\tndot1nas07\2dnodata\shared\us 01\Shared\SURVEYS\Design\PROJECTS\Unicoi SR 107\00\Asht

TYPE	YEAR	PROJECT NO.	SHEET NO.
CONST.	2022	BR-STP-107(28)	U3-1

UNICOI CO.
86006-3235-94

UTILITIES INDEX

SHEET NUMBER	SHEET NAME
U3-1	ESTIMATED QUANTITIES & DRAWING INDEX
U3-2	FOOTNOTES DESCRIPTIONS
U3-3	GENERAL NOTES & LEGEND
U3-4	TELEPHONE RELOCATION STATION 207+75 TO STATION 216+50

SEE U3-2 FOR FOOTNOTE DESCRIPTIONS

ESTIMATED UTILITY QUANTITIES

Project No. 1: 86006-3235-94

FOOTNOTE	ITEM NO.	DESCRIPTION	UNIT	QUANTITY	% Utility Betterment	%Project Public	%Project Private
1-	793-01.08	POLE 35FT CLASS 5 WOOD	EACH	6	0.00%	100.00%	0.00%
2-	793-01.40	ANCHOR 3/4IN	EACH	9	0.00%	100.00%	0.00%
3-	793-02.07	GUY WIRE 6.6M OR 1/4IN	EACH	2	0.00%	100.00%	0.00%
4-	793-02.08	GUY WIRE 10M OR 3/8IN	EACH	10	0.00%	100.00%	0.00%
5-	793-02.93	OVERHEAD GUY WIRE (10M)	EACH	3	0.00%	100.00%	0.00%
6-	793-03.01	25 PAIR GROUP AERIAL SPLICE	EACH	158	0.00%	100.00%	0.00%
7-	793-03.02	6M STRAND	L.F.	1130	0.00%	100.00%	0.00%
8-	793-03.03	10M STRAND	L.F.	1750	0.00%	100.00%	0.00%
9-	793-03.12	50 PAIR CABLE	L.F.	50	0.00%	100.00%	0.00%
10-	793-03.16	200 PAIR CABLE	L.F.	905	0.00%	100.00%	0.00%
11-	793-03.18	400 PAIR CABLE	L.F.	740	0.00%	100.00%	0.00%
12-	793-03.19	600 PAIR CABLE	L.F.	305	0.00%	100.00%	0.00%
13-	793-04.01	RELASH/DELASH CABLE	L.F.	3977	0.00%	100.00%	0.00%
14-	793-04.02	2 PAIR AERIAL DROP	L.F.	1610	0.00%	100.00%	0.00%
15-	793-04.06	READY ACCESS CLOSURE	EACH	5	0.00%	100.00%	0.00%
16-	793-04.07	AERIAL SPLICE CLOSURE	EACH	5	0.00%	100.00%	0.00%
17-	793-04.08	TRANSFER AERIAL CABLE	EACH	22	0.00%	100.00%	0.00%
18-	793-11.13	BURIED RISER GUARD	EACH	4	0.00%	100.00%	0.00%
19-	793-12.08	600 PAIR UG CABLE	L.F.	300	0.00%	100.00%	0.00%
20-	793-13.17	2 DUCT FORMATION @ 36IN DEPTH	L.F.	200	0.00%	100.00%	0.00%
21-	793-14.01	SAND ENDCASEMENT PER DUCT	L.F.	400	0.00%	100.00%	0.00%
22-	793-98.01	REMOVE AERIAL CABLE AND WIRE	L.F.	6875	0.00%	100.00%	0.00%
23-	793-98.04	REMOVE POLES ALL SIZES	EACH	12	0.00%	100.00%	0.00%
24-	793-98.08	REMOVE ANCHOR (ANY SIZE)	EACH	11	0.00%	100.00%	0.00%

SEALED BY

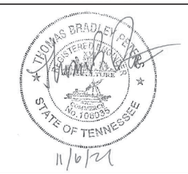

COORDINATES ARE NAD 83(1995), ARE DATUM ADJUSTED BY THE FACTOR OF 1.000060 AND TIED TO THE TGRN. ALL ELEVATIONS ARE REFERENCED TO THE NAVD 1988 WITH GEOID 2009U07.

LUMEN TECHNOLOGIES
101 NORTH ROAN ST.
JOHNSON CITY, TN 37601
ANDY ICE
423-461-7724
ANDREW.F.ICE@LUMEN.COM

LUMEN

ESTIMATED QUANTITIES

$$$$$SYTIME$$$$$$$
$$$$DGNSPEC$$$$$$$

TYPE	YEAR	PROJECT NO.	SHEET NO.
CONST.	2022	BR-STP-107(28)	U3-2

UNICOI CO.
86006-3235-94

1) INCLUDES ALL MATERIALS, LABOR, EQUIPMENT FOR COMPLETE INSTALLATION INCLUDING BUT NOT LIMITED TO BUTT WRAP, MGNV, GROUND ROD, DIG HOLE, TAMP, BLASTING, AND NUMBER POLE.
2) INCLUDES ALL MATERIALS, LABOR, EQUIPMENT FOR COMPLETE INSTALLATION INCLUDING BUT NOT LIMITED TO DIGGING HOLE, BLASTING OR MECHANICALLY INSERTING INTO GROUND, BONDING/GROUNDING.
3) INCLUDES SETUP, TRAFFIC CONTROL, GUY WIRE, GUARD, BONDING/GROUNDING AND POLE HARDWARE.
4) INCLUDES SETUP, TRAFFIC CONTROL, GUY WIRE, GUARD, BONDING/GROUNDING AND POLE HARDWARE.
5) INCLUDES SETUP, TRAFFIC CONTROL, GUARD, BONDING/GROUNDING AND POLE HARDWARE.
6) SEE CENTURYLINK'S SPECS.
7) INCLUDES ALL MATERIALS, LABOR AND EQUIPMENT INCLUDING BUT NOT LIMITED TO TRAFFIC CONTROL, BONDING/GROUNDING, AND TENSIONING.
8) INCLUDES ALL MATERIALS, LABOR AND EQUIPMENT INCLUDING BUT NOT LIMITED TO TRAFFIC CONTROL, BONDING/GROUNDING, AND TENSIONING.
9) INCLUDES ALL MATERIALS, LABOR AND EQUIPMENT INCLUDING BUT NOT LIMITED TO TRAFFIC CONTROL, BONDING/GROUNDING, AND TENSIONING.
10) INCLUDES ALL MATERIALS, LABOR AND EQUIPMENT INCLUDING BUT NOT LIMITED TO TRAFFIC CONTROL, BONDING/GROUNDING, AND TENSIONING.
11) INCLUDES ALL MATERIALS, LABOR AND EQUIPMENT INCLUDING BUT NOT LIMITED TO TRAFFIC CONTROL, BONDING/GROUNDING, AND TENSIONING.
12) INCLUDES ALL MATERIALS, LABOR AND EQUIPMENT INCLUDING BUT NOT LIMITED TO TRAFFIC CONTROL, BONDING/GROUNDING, AND TENSIONING.
13) INCLUDES REMOVING BONDING AND GROUNDING, REMOVING STRAND.
14) INCLUDES ALL MATERIALS, LABOR AND EQUIPMENT INCLUDING BUT NOT LIMITED TO HARDWARE, TENSIONING, FUSING, TERMINATION AT THE POLE AND CUSTOMER, NETWORK INTERFACE.
15) INCLUDES ALL MATERIALS, LABOR AND EQUIPMENT INCLUDING BUT NOT LIMITED TO SETUP, TRAFFIC CONTROL, MOUNTING HARDWARE BONDING/GROUNDING AND SPLICING.
16) INCLUDES ALL MATERIALS, LABOR AND EQUIPMENT INCLUDING BUT NOT LIMITED TO SETUP, TRAFFIC CONTROL, MOUNTING HARDWARE BONDING/GROUNDING AND SPLICING.
17) INCLUDES MOUNTING HARDWARE, BONDING/GROUNDING, STRAND.
18) INCLUDES MOUNTING HARDWARE, BONDING/GROUNDING.
19) INCLUDES ALL MATERIALS, LABOR, AND EQUIPMENT INCLUDING BUT NOT LIMITED TO BACKFILL PER SPECIFICATIONS, SURFACE RESTORATION OF ALL CROSSINGS TO TDOT STANDARDS, SETUP AND TRAFFIC CONTROL.
20) INCLUDES ALL MATERIALS, LABOR AND EQUIPMENT INCLUDING BUT NOT LIMITED TO SPACERS, COUPLINGS, BENDS, OPENING TRENCH, BACKFILL PER SPECS, SURFACE RESTORATION OF ALL CROSSINGS TO TDOT STANDARDS, SETUP, TRAFFIC CONTROL.
21) INCLUDES ALL MATERIALS, LABOR, AND EQUIPMENT INCLUDING BUT NOT LIMITED TO BACKFILL PER SPECIFICATIONS, SURFACE RESTORATION OF ALL CROSSINGS TO TDOT STANDARDS, SETUP AND TRAFFIC CONTROL.
22) INCLUDES ALL CABLES, DROPS, GUYS, STRAND, FUSE LINKS, TERMINALS.
23) INCLUDES TRAFFIC CONTROL, LABOR AND EQUIPMENT.
24) CUT RODS OFF BELOW FINISHED GRADE.

SEALED BY

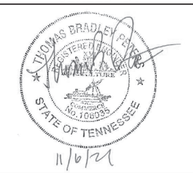

COORDINATES ARE NAD 83(1995). ARE DATUM ADJUSTED BY THE FACTOR OF 1.000060 AND TIED TO THE TGRN. ALL ELEVATIONS ARE REFERENCED TO THE NAVD 1988 WITH GEOID 2009U07.

LUMEN

FOOTNOTE DESCRIPTIONS

$$$$$SYTIME$$$$$$$
$$$$DGNSPEC$$$$$$$

TYPE	YEAR	PROJECT NO.	SHEET NO.
CONST.	2022	BR-STP-107(28)	U3-3
-------	---	----------	---
-------	---	----------	---
-------	---	----------	---

UNICOI CO.
86006-3235-94

GENERAL NOTES TO CONTRACTOR

1) EXCEPT FOR EROSION SEDIMENT CONTROL ITEMS, NO ROADWAY OR BRIDGE ITEMS SHALL BE UTILIZED TO COMPENSATE FOR WORK METHODS OR MATERIALS ASSOCIATED WITH AND/OR SPECIFIED FOR THE UTILITY INSTALLATION, EVEN THOUGH THE SAME OR SIMILAR ROADWAY OR BRIDGE MATERIALS MAY HAVE BEEN CALLED FOR IN THE UTILITY SPECIFICATIONS OR DRAWINGS.

2) ALL MATERIALS, METHODS, AND/OR INTEGRAL MATERIALS OUTLINED IN THE UTILITY SPECIFICATIONS OR DRAWINGS NECESSARY TO PROVIDE A COMPLETE AND FUNCTIONAL INSTALLATION MUST BE INCLUDED IN THE UNIT PRICE FOR THE ASSOCIATED UTILITY WORD ITEM.

3) THE CONTRACTOR MUST MAINTAIN ALL SERVICES DURING THE CONSTRUCTION OF THE RELOCATED FACILITY. ANY COSTS ASSOCIATED WITH INSTALLATION OF REQUIRED TEMPORARY SERVICE LINES DUE TO THE ROADWAY CONSTRUCTION SEQUENCE OF WORK (I.E., CUTS, FILLS, PHASING, ETC.) SHALL BE INCLUDED IN THE COST OF THE PERMANENT UTILITY ITEMS. (NOTE TO UTILITY: THE UTILITY RELOCATION PLANS SHALL PROVIDE TO THE CONTRACTOR THE UTILITY'S REQUIREMENTS FOR TEMPORARY TIE-INS (INCLUDING NECESSARY TESTING AND STERILIZATION TO ACCOMPLISH THE TIE-IN) AND ALSO ANY RESTRICTIONS FOR TAKING LINES OUT OF SERVICE. IF A TEMPORARY LINE WILL BE A MAJOR ITEM OF WORK, A SPECIFIC TEMPORIZATION PLAN AND ITEM MUST BE INCLUDED IN THE UTILITY'S PLANS.)

4) IT SHALL BE THE RESPONSIBILITY OF THE PRIME CONTRACTOR'S SURVEYOR TO LAY OUT ALL THE FACILITIES BEING RELOCATED WITHIN THE CONTRACT.

5) FOR BURIED UTILITIES, THE PRIME CONTRACTOR OR SUBCONTRACTOR SHALL BE REQUIRED TO PROVIDE TO THE UTILITY UPON COMPLETION OF THE UTILITY'S RELOCATION WORK A SET OF AS-BUILT DRAWINGS FOR THEIR RECORDS. THESE AS-BUILT DRAWINGS SHOULD BE PREPARED AS THE JOB PROGRESSES TO ENSURE THEIR ACCURACY.

6) WHERE EROSION CONTROL MEASURES ARE NEEDED FOR THE UTILITY RELOCATION WORK OCCURRING INSIDE OR OUTSIDE STATE RIGHT-OF-WAY, THE CONTRACTOR SHALL SUBMIT TO THE TDOT PROJECT SUPERVISOR FOR APPROVAL A PROPOSED EROSION AND SEDIMENT CONTROL PLAN PRIOR TO BEGINNING THE WORK. TDOT APPROVAL MUST BE RECEIVED BEFORE THE EROSION CONTROL PAY ITEMS FOR ROADWAY CONSTRUCTION CAN BE USED FOR ANY ADDITIONAL EROSION CONTROL MEASURES REQUIRED FOR THE UTILITY RELOCATION WORK.

7) DRIVEWAY, SIDEWALK AND ROADWAY TEMPORARY RESTORATION SHALL BE PART OF THE IN-PLACE COST OF PLACING THE UTILITY ITEM WITHIN THE ROW.

8) ANY EXCAVATION OF THE STREAM CHANNEL AREA SHALL BE SEPARATED FROM FLOWING WATER AND ACCOMPLISHED DURING LOW FLOW CONDITIONS. THIS SHALL BE ACCOMPLISHED BY THE USE OF FLUMES, LINED DIVERSION CHANNEL WITH SANDBAG BERM, DIVERSION PIPE WITH SANDBAG DAM AT PIPE INLET, OR IN SOME CASES COFFERDAMS. ALTERNATIVELY, BASED ON FIELD CONDITIONS AND CONTRACTOR SELECTION, THE UTILITY RELOCATION MAY BE ACCOMPLISHED USING BORE TECHNOLOGY WITH NO STREAM CHANNEL IMPACTS.

9) ALL MATERIAL AND SUPPLIER OF MATERIAL MUST BE PRE-APPROVED BY CENTURYLINK PRIOR TO ORDERING.

10) ITEM NUMBER 793-03.02 WILL BE 6.6M (1/4IN) EHS.

LEGEND

- MANHOLE
- POLE
- ANCHOR/GUY
- HANDHOLE
- PEDESTAL
- AERIAL TELEPHONE CABLE
- UNDERGROUND TELEPHONE CABLE
- AERIAL SERVICE DROP
- BURIED SERVICE DROP

SEALED BY

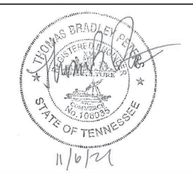

COORDINATES ARE NAD 83(1995), ARE DATUM ADJUSTED BY THE FACTOR OF 1.000060 AND TIED TO THE TGRN. ALL ELEVATIONS ARE REFERENCED TO THE NAVD 1988 WITH GEOID 2009U07.

LUMEN

GENERAL NOTES & LEGEND

$$$$SYTIME$$$$$$$$
$$$$DGNSPEC$$$$$$$$

$$$$SYTIME$$$$$$$$
$$$$DGNSPEC$$$$$$$$

TENNESSEE D.O.T.
DESIGN DIVISION
FILE NO.

CONSTRUCTION DRAWINGS
FOR
STATE ROUTE 107 - WATERLINE RELOCATION

TDOT PROJECT NO. BR-STP-107 (28)
UNICOI WATER UTILITY DISTRICT
UNICOI COUNTY, TENNESSEE

TYPE	YEAR	PROJECT NO.	SHEET NO.
CONST.	2022	BR-STP-107(28)	U4-1

ESTIMATED UTILITY QUANTITIES

	ITEM	ITEM SHORT DESCRIPTION	UNITS	ESTIMATED QUANTITY	ITEM LONG DESCRIPTION
①	795-01.09	12 INCH DUCTILE IRON PIPE RESTRAINED JOINT WATER LINE	L.F.	310	12 INCH DUCTILE IRON PIPE RESTRAINED JOINT WATER LINE
	795-05.91	2 INCH PVC CASING PIPE OPEN CUT	L.F.	115	2 INCH PVC CASING PIPE OPEN CUT
③	795-06.04	CONNECT TO 6 INCH WATER LINE (FOR SERVICE LINE)	EACH	1	CONNECT TO 6 INCH WATER LINE (FOR SERVICE LINE)
④	795-07.15	12 INCH x 12 INCH TAPPING SLEEVE AND VALVES W/BOX	EACH	2	12 INCH x 12 INCH TAPPING SLEEVE AND VALVES W/BOX
⑤	795-07.30	INSERTION VALVE AND BOX (4 INCH)	EACH	1	INSERTION VALVE AND BOX (4 INCH)
⑤	795-07.34	INSERTION VALVE AND BOX (12 INCH)	EACH	2	INSERTION VALVE AND BOX (12 INCH)
*	795-09.10	SAMPLE TAP	EACH	1	SAMPLE TAP
⑦	795-09.24	TI 2 INCH HDPE CASING FOR SERVICE LINE PIPE UNCONSOL.	L.F.	155	TRENCHLESS INSTALLATION OF 2-INCH HIGH DENSITY POLYETHYLENE CASING FOR SERVICE PIPE IN UNCONSOLIDATED
⑦	795-09.28	3/4 INCH COPPER SERVICE LINE	L.F.	270	3/4 INCH COPPER SERVICE LINE
⑥	795-10.31	2" BLOW OFF ASSEMBLY ON 4" LINE	EACH	1	2" BLOW OFF ASSEMBLY ON 4" LINE
⑥	795-11.01	BLOW OFF ASSEMBLY ON 12 INCH LINE	EACH	1	BLOW OFF ASSEMBLY ON 12 INCH LINE
	795-11.12	RETIRE IN PLACE EXISTING WATER MAIN	L.F.	336	RETIRE IN PLACE EXISTING WATER MAIN
**	795-13.05	CREEK CROSSING #1	LS	1	CREEK CROSSING #1 AS IDENTIFIED ON PLANS (APPROXIMATE STA. 210+25 TO STA. 211+25)
	795-20.01	RECONNECT SERVICE ASSEMBLY (WATER METERS)	EACH	2	RECONNECT SERVICE ASSEMBLY (WATER METERS)

FOOTNOTES

* INCLUDES ALL MATERIALS, LABOR AND EQUIPMENT FOR INSTALLATION OF TAP ON WATER LINE FOR WATER SAMPLING PURPOSES. COST OF ACTUAL SAMPLING IS INCLUDED IN COST OF PIPE.

** INCLUDES ALL MATERIALS, LABOR AND EQUIPMENT TO COMPLETE INSTALLATION OF CREEK CROSSING AS IDENTIFIED FROM STATION 210+25 TO STATION 211+25 ON PLANS AND SHALL BE PAYED AS A LUMP SUM ITEM. INCLUDES ANY METHOD AND ALL MATERIALS AS SPECIFIED ON PLAN DETAILS.

① INCLUDES ALL MATERIALS, LABOR, EQUIPMENT FOR COMPLETE INSTALLATION OF PIPE INCLUDING BUT NOT LIMITED TO TRAFFIC CONTROL, MATERIALS, EQUIPMENT, EXCAVATION IN BOTH UNCONSOLIDATED AND ROCK, REMOVAL AND REPLACEMENT OF UNSUITABLE SOIL, ENVELOPE/BEDDING MATERIAL, BACKFILLING,FLOWABLE FILL, THRUST BLOCKING, CONCRETE DEADMAN, PIPE FUSION, TRACER WIRE, WARNING TAPE, APPURTENANCES, TEMPORARY/PERMANENT SHORING, MAINTAINING THE TRENCH, TESTING, FLUSHING, DISINFECTION, BACTERIOLOGICAL SAMPLING, TEMPORARY/PERMANENT SURFACE RESTORATION, AND ANY OTHER LABOR OR MATERIALS REQUIRED TO COMPLETE THE WORK AS SPECIFIED ON THE PLANS.

③ INCLUDES ALL MATERIALS, LABOR AND EQUIPMENT NECESSARY FOR CONNECTING TO AN EXISTING WATER LINE INCLUDING TRAFFIC CONTROL.

④ INCLUDES ALL MATERIALS, LABOR AND EQUIPMENT INCLUDING BUT NOT LIMITED TO TAPPING SLEEVE, VALVE, VALVE BOX, BOX ADJUSTMENT, VALVE BOX COLLAR, VALVE MARKER, EXCAVATION, BEDDING, BACKFILL, BLOCKING AND RESTRAINT, TAP OF EXISTING LINE, AND TRAFFIC CONTROL.

⑤ INCLUDES ALL MATERIALS, LABOR AND EQUIPMENT INCLUDING BUT NOT LIMITED TO FITTINGS, VALVE, VALVE STEM EXTENSIONS, VALVE BOX AND COVER, BOX ADJUSTMENT, VALVE BOX COLLAR, VALVE MARKER, EXCAVATION, BEDDING, BACKFILL, BLOCKING, AND TRAFFIC CONTROL.

⑥ INCLUDES ALL MATERIALS, LABOR AND EQUIPMENT INCLUDING BUT NOT LIMITED TO MACHINERY, TOOLS OR APPARATUS NECESSARY FOR INSTALLATION OF ASSEMBLIES AS DESCRIBED IN THE PLANS AND SPECIFICATIONS EXCEPT FOR SERVICE LINE WHICH IS PAID SEPERATELY FOR EACH FOOT INSTALLED.

⑦ INCLUDES ALL MATERIALS, LABOR AND EQUIPMENT FOR COMPLETE INSTALLATION OF SERVICE LINE OR CASING FOR SERVICE LINE ON LONG SIDE AND SHORT SIDE OF MAIN.

BOARD

KENNETH KISIEL	-	CHAIRMAN
WILLIAM TODD HOPSON	-	TREASURER
SHARON McLELLAN	-	SECRETARY
TOM BRYANT	-	MANAGER

INDEX OF SHEETS

U4-1 – TITLE SHEET & QUANTITIES
U4-2 – WATER LINE PLAN VIEW
U4-3 – WATER LINE PROFILE VIEW
U4-4 – CONSTRUCTION DETAILS
U4-5 – CONSTRUCTION DETAILS & NOTES

UNICOI WATER UTILITY DISTRICT
P.O. BOX 8
304 TENNESSEE STREET
UNICOI, TN 37692
MANAGER:
TOM BRYANT
423-743-6202
TOM.BRYANT@UNICOIWATER.COM

I, CATHY KYKER, A TENNESSEE REGISTERED ENGINEER HAVE STAMPED THE U4 WATERLINE DESIGN PORTION OF THE DRAWINGS INCLUDED IN THIS SET. THE WATERLINE DESIGN IS BASED UPON THE TDOT PLANS ISSUED FOR THIS PROJECT ON 07/27/2021.

CATHY KYKER WALDEN KYKER
REGISTERED ENGINEER
NO. 0002004
STATE OF TENNESSEE
07/27/2021

W&W Engineering,LLC
130 West Summer Street
Suite 3
Greeneville, TN 37743
Phone No. 423-638-2770
Fax No. 423-638-8615

COORDINATE ARE NAD/83(1995), ARE DATUM ADJUSTED BY THE FACTOR OF 1.00012 AND TIED TO THE TGRN. ALL ELEVATIONS ARE REFERENCE TO THE NAVD 1988 WITH GEOID 12B.

W&W Engineering,LLC
130 West Summer Street
Suite 3
Greeneville, TN 37743
Phone No. 423-638-2770
Fax No. 423-638-8615

UNICOI WATER
UTILITY DISTRICT
WATER LINE
RELOCATION

TITLE SHEET & QUANTITIES

TYPE	YEAR	PROJECT NO.	SHEET NO.
CONST.	2022	BR-STP-107(28)	U4-2

N

86006-2235-94
BEGIN PROJ. BR-STP-107(28)
STA. 208+00.00 (R.O.W.)

STA. 208+00
INSTALL 12" INSERTION VALVE ON EXISTING 12" D.I.P. WATERLINE.

LINDA PLEMONS AND HUSBAND, DON PLEMONS
7

W. D. COLLINS AND WIFE, BILLIE COLLINS
11

STA. 213+15.50
REPLACE EXISTING 3/4" SERVICE LINE FROM METER TO R.O.W. LINE INCLUDING UNDER HIGHWAY 107 AND RECONNECT. DEPTH OF NEW SERVICE LINE TO BE BELOW NEW STORM SEWER LINE. NEW SERVICE LINE TO BE 3/4" COPPER INSIDE 2" CASING. CASING PIPE TO BE INSTALLED BY OPEN CUT METHOD. CASING PIPE CAN BE PVC OR HDPE.

86006-3235-94
END PROJ. BR-STP-107(28)
STA. 216+50.00 (CONST.)

210

215

NON TIDAL CREEK

1-S-METAL (CALHOUN CENTER)

S.R. 107 (UNICOI DR.)

S.R. 107 (UNICOI DRIVE) STA. 207+00.00

STA. 208+00.00

PORTABLE BUILDINGS

GRAVEL

CARL W. JONES AND WIFE, SUE JONES
6

STA. 211+36.33
INSTALL 12" INSERTION VALVE ON EXISTING 12" D.I.P. WATERLINE.

STA. 213+00.00

1-S F RES.

2-S F APART.

1-S F GARAGE

1-S F RES.

1-S BRICK BUSINESS

1-S BLOCK BUSINESS

S.R. 173 (ERWIN HWY.) STA. 217+00.00

PROP. 10' CONST. EASEMENT
PROPOSED ROW
PROPERTY ROW
PRES. & PROP. ROW
EXIST. 4" W.L. (JOHNSON CITY)
EXIST. 12" W.L. (UNICOI WATER)
EXISTING ROW
CUT
FILL
PRES. ROW
EXIST. 6" W.L. (JOHNSON CITY)
G.V.
W.M.

S.R. 107 (UNICOI DR.)
S.R. 173 (ERWIN HWY.)

EXIST. 4" W.L. (UNICOI WATER)
B.O. G.V.

STA. 216+31.11
INSTALL 4" INSERTION VALVE ON EXISTING 4" AC WATERLINE. CUT AND INSTALL A END OF LINE BLOW-OFF SEE DETAIL SHEET U4-5. THE REMAINING 4" LINE (SOUTH OF INSERTION VALVE & BLOW OFF) IS TO BE ABANDONED WHEN VALVE AND BLOW OFF ARE IN PLACE AND NEW SERVICE LINE HAS BEEN INSTALLED.

86006-3235-94
BEGIN PROJ. BR-STP-107(28)
STA. 207+75.00 (CONST.)

INSTALL NEW 12" D.I. PIPE WATERLINE BETWEEN THE TWO TAPPING SLEEVES AND VALVES.

STA. 210+25 TO STA. 211+25
INSTALL 12" D.I.P. CREEK CROSSING #1

STA. 207+71.27
INSTALL NEW 12" TAPPING SLEEVE AND VALVE AND CONNECT TO EXISTING 12" WATERLINE. ALSO INSTALL NEW WATERLINE FROM THIS POINT TO NEW TAPPING SLEEVE AND VALVE ON NORTH SIDE OF CREEK.

4
VIRGINIA BOWMAN HUNTER HEIRS

NOTES:

1. IN AREAS WHERE THE WATER LINE AND GAS LINE CROSS (OR WHERE THE 36" HORIZONTAL SEPARATION CANNOT BE MAINTAINED) THE GAS LINE IS TO BE INSTALLED WITH 18" VERTICAL SEPARATION WITH WATERLINE ON TOP. THE WATERLINE SHALL HAVE A MINIMUM OF 36" COVER. IN ALL OTHER AREAS THE UNICOI COUNTY GAS LINE AND WATERLINE SHALL HAVE A MINIMUM OF 36" HORIZONTAL SEPARATION. SEE GAS LINE DRAWINGS FOR ADDITIONAL INFORMATION.

2. A BLOW OFF IS TO BE INSTALLED IN NEW 12" LINE FOR FLUSHING. LOCATION IS TO BE FIELD LOCATED. SEE NOTES ON SHEET U4-5 AND DETAIL ON SHEET U4-4.

ANY EXCAVATION OF THE STREAM CHANNEL AREA SHALL BE SEPARATED FROM FLOWING WATER AND ACCOMPLISHED DURING FLOW CONDITIONS. THIS SHALL BE ACCOMPLISHED BY THE USE OF FLUMES, LINED DIVERSION CHANNEL WITH SANDBAG BERM, DIVERSION PIPE WITH SANDBAG DAM AT PIPE INLET, OR IN SOME CASES COFFERDAMS. ALTERNATIVELY, BASED ON FIELD CONDITIONS AND CONTRACTOR SELECTION, THE UTILITY RELOCATION MAY BE ACCOMPLISHED USING BORE TECHNOLOGY WITH NO STREAM CHANNEL IMPACTS.

STA. 211+36.33
INSTALL NEW 12" TAPPING SLEEVE AND VALVE AND CONNECT TO EXISTING 12" WATERLINE.

8
LINDA PLEMONS AND HUSBAND, DON PLEMONS

NORTH INDIAN CREEK

1-S-METAL (JONES HARDWARE)

1-S-B (UNICOI TOWN HALL)

1-S BRICK MEDICAL BUILDING

ASPHALT

1-S-B (UNICOI FAST CASH)

1-S BLOCK

EXIST. 3/4" SERVICE

EXIST. 12" W.L. (UNICOI WATER)
EXISTING EASEMENT

EXIST. 16" W.L. (JOHNSON CITY)

EXIST. 6" W.L. (UNICOI WATER)

F.H.

15" RCP

S.R. 107 STA. 303+00.00

WASHINGTON ST.

10
TOWN OF UNICOI

TAP EXISTING 6" WATER LINE AND INSTALL 3/4" COPPER SERVICE INSIDE 2" HDPE LINE BY DIRECTIONAL BORE METHOD FROM EXISTING 6" WATER LINE TO METER SERVING UNICOI TOWN HALL AND CONNECT TO EXISTING METER.

THE UNICOI COUNTY GAS COMPANY WILL ALSO BE INSTALLING A 2" GAS LINE IN THIS AREA. WORK (FOR BOTH UTILITIES) IS TO BE COORDINATED SO THAT THE REQUIRED SEPERATION OF THE TWO UTILITIES CAN BE ACHIEVED. SEE NOTE 1 ON THIS PAGE.

EXISTING UNICOI WATER 4" WATERLINE EAST OF INTERSECTION AND SOUTH OF INTERSECTION IS NOT CURRENTLY IN SERVICE.

COORDINATES ARE NAD 83(1995), ARE DATUM ADJUSTED BY THE FACTOR OF 1.00012 AND TIED TO THE TGRN. ALL ELEVATIONS ARE REFERENCED TO THE NAVD 1988 WITH GEOID 12B.

REV. NO.	REVISION REMARKS	REV. DATE:	REV. BY:	REV. CHK. BY:
2	REVISED NOTES	08/02/2023	LCF	CK
1	ADDED STREAM EXCAVATION NOTE	12/08/2021	LCF	CK

I, CATHY KYKER, A TENNESSEE REGISTERED ENGINEER HAVE STAMPED THE U4 WATERLINE DESIGN PORTION OF THE DRAWINGS INCLUDED IN THIS SET. THE WATERLINE DESIGN IS BASED UPON THE TDOT PLANS ISSUED FOR THIS PROJECT ON 07/27/2021.

CATHY KYKER REGISTERED ENGINEER AGRICULTURE ACCOMMERCE 0002009B STATE OF TENNESSEE

W&W Engineering,LLC
150 West Summer Street
Suite 3
Greeneville, TN 37743
Phone No. 423-636-2770
Fax No. 423-638-8615

UNICOI WATER UTILITY DISTRICT
RELOCATION PLAN VIEW
STA. 207+75 TO STA. 216+50
SCALE: 1"=50'

TYPE	YEAR	PROJECT NO.	SHEET NO.
CONST.	2022	BR-STP-107(28)	U4-3

S.R. 107 UNICOI COUNTY
86006-3235-94 (CONST.)

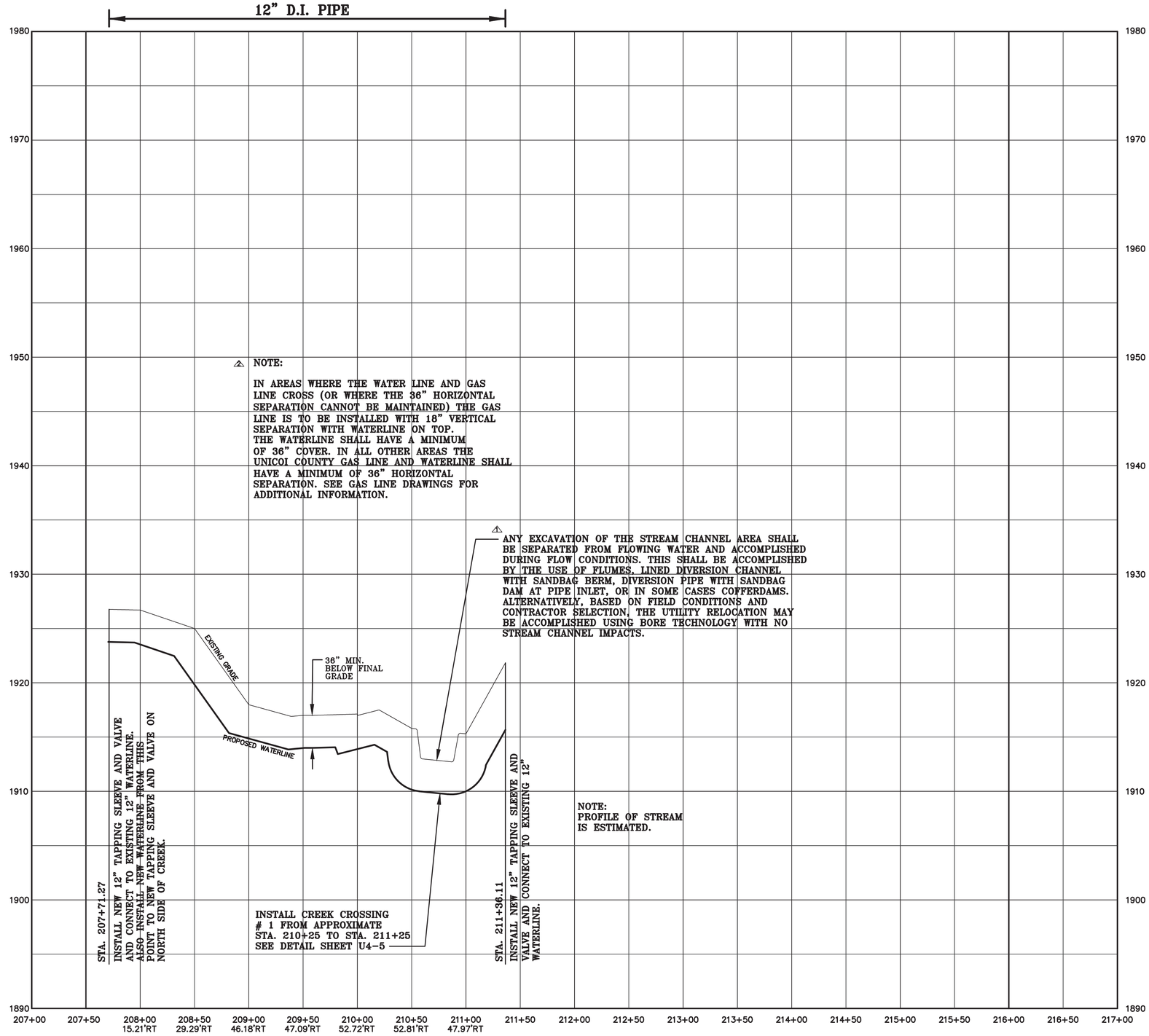

NOTE:

IN AREAS WHERE THE WATER LINE AND GAS LINE CROSS (OR WHERE THE 36" HORIZONTAL SEPARATION CANNOT BE MAINTAINED) THE GAS LINE IS TO BE INSTALLED WITH 18" VERTICAL SEPARATION WITH WATERLINE ON TOP. THE WATERLINE SHALL HAVE A MINIMUM OF 36" COVER. IN ALL OTHER AREAS THE UNICOI COUNTY GAS LINE AND WATERLINE SHALL HAVE A MINIMUM OF 36" HORIZONTAL SEPARATION. SEE GAS LINE DRAWINGS FOR ADDITIONAL INFORMATION.

ANY EXCAVATION OF THE STREAM CHANNEL AREA SHALL BE SEPARATED FROM FLOWING WATER AND ACCOMPLISHED DURING FLOW CONDITIONS. THIS SHALL BE ACCOMPLISHED BY THE USE OF FLUMES, LINED DIVERSION CHANNEL WITH SANDBAG BERM, DIVERSION PIPE WITH SANDBAG DAM AT PIPE INLET, OR IN SOME CASES COFFERDAMS. ALTERNATIVELY, BASED ON FIELD CONDITIONS AND CONTRACTOR SELECTION, THE UTILITY RELOCATION MAY BE ACCOMPLISHED USING BORE TECHNOLOGY WITH NO STREAM CHANNEL IMPACTS.

INSTALL CREEK CROSSING # 1 FROM APPROXIMATE STA. 210+25 TO STA. 211+25 SEE DETAIL SHEET U4-5

NOTE:
PROFILE OF STREAM IS ESTIMATED.

COORDINATES ARE NAD 83(1995), ARE DATUM ADJUSTED BY THE FACTOR OF 1.00012 AND TIED TO THE TGRN. ALL ELEVATIONS ARE REFERENCED TO THE NAVD 1988 WITH GEOID 12B.

I, CATHY KYKER, A TENNESSEE REGISTERED ENGINEER HAVE STAMPED THE U4 WATERLINE DESIGN PORTION OF THE DRAWINGS INCLUDED IN THIS SET. THE WATERLINE DESIGN IS BASED UPON THE TDOT PLANS ISSUED FOR THIS PROJECT ON 07/27/2021.

REV. NO.	REVISION REMARKS	REV. DATE:	REV. BY:	REV. CHK. BY:
2	REVISED NOTES	08/02/2023	LCF	CK
1	ADDED STREAM EXCAVATION NOTE	12/08/2021	LCF	CK

CATHY SHARP WALDEN KYKER
REGISTERED ENGINEER
AGRICULTURE
COMMERCE
No. 00020096
STATE OF TENNESSEE
08/02/2023

W&W Engineering, LLC
130 West Summer Street
Suite 3
Greeneville, TN 37743
Phone No. 423-638-2770
Fax No. 423-638-5615

UNICOI WATER UTILITY DISTRICT
WATER LINE RELOCATION PROFILE
STA. 207+75 TO STA. 216+50
SCALE: 1"=50' HORZ.
1"=5' VERT.

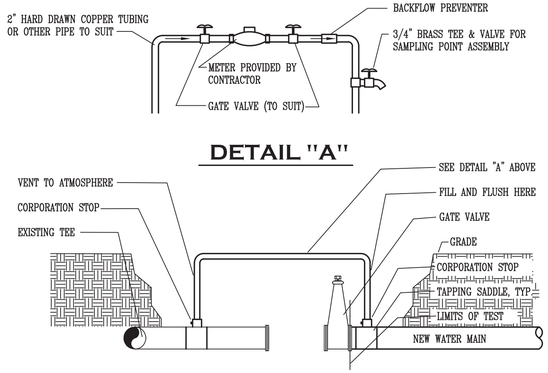

FILLING & FLUSHING CONNECTION

NOT TO SCALE

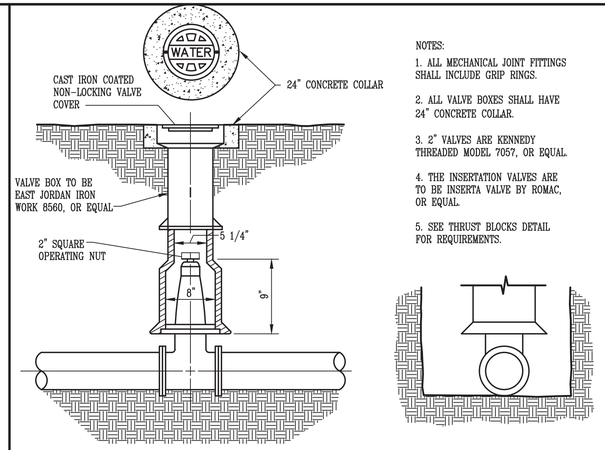

NOTES:

1. ALL MECHANICAL JOINT FITTINGS SHALL INCLUDE GRIP RINGS.
2. ALL VALVE BOXES SHALL HAVE 24" CONCRETE COLLAR.
3. 2" VALVES ARE KENNEDY THREADED MODEL 7057, OR EQUAL.
4. THE INSERTATION VALVES ARE TO BE INSERTA VALVE BY ROMAC, OR EQUAL.
5. SEE THRUST BLOCKS DETAIL FOR REQUIREMENTS.

WATER VALVE INSTALLATION

NOT TO SCALE

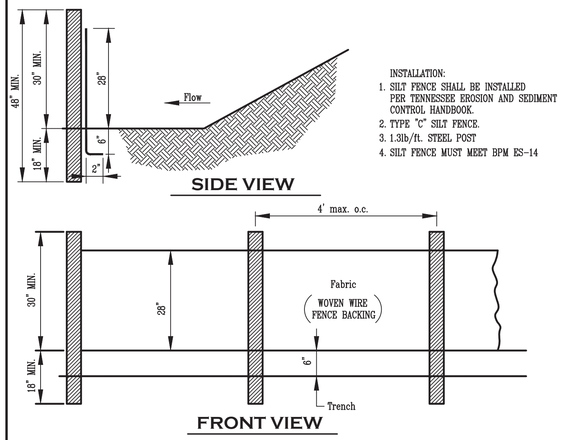

INSTALLATION:

1. SILT FENCE SHALL BE INSTALLED PER TENNESSEE EROSION AND SEDIMENT CONTROL HANDBOOK.
2. TYPE "C" SILT FENCE.
3. 1.3lb/ft. STEEL POST
4. SILT FENCE MUST MEET BPM ES-14

"TYPE C" SILT FENCE INSTALLATION

NOTE: SILT FENCE MUST MEET BMP ES-14

NOT TO SCALE

TYPE	YEAR	PROJECT NO.	SHEET NO.
CONST.	2022	BR-STP-107(28)	U4-4

S.R. 107 UNICOI COUNTY
86006-3235-94 (CONST.)

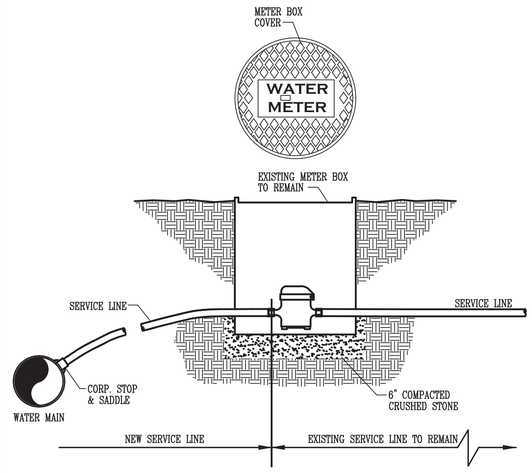

⚠ TYPICAL METER RECONNECTION

NOT TO SCALE

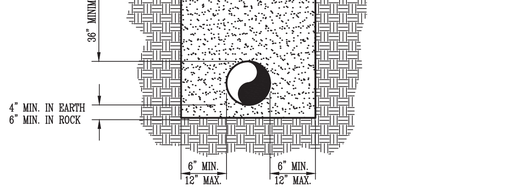

TYPICAL PIPELINE TRENCH

NOT TO SCALE

NOTE:
1. FOR PAVEMENT RESTORATION SEE TECHNICAL SPECIFICATIONS SECTION 2600 AND NOTES ON PAGE U4-5.

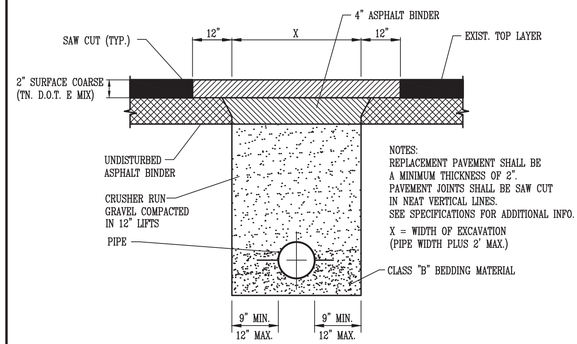

NOTES:
REPLACEMENT PAVEMENT SHALL BE A MINIMUM THICKNESS OF 2". PAVEMENT JOINTS SHALL BE SAW CUT IN NEAT VERTICAL LINES. SEE SPECIFICATIONS FOR ADDITIONAL INFO.

X = WIDTH OF EXCAVATION (PIPE WIDTH PLUS 2' MAX.)

PAVEMENT RESTORATION

NOT TO SCALE

CONCRETE THRUST BLOCK DIMENSIONS					
X	A	B	C	D	D_1
11 1/4" BENDS AND VALVES					
≤4"	4"	1'-0"	1'-0"	1'-0"	1'-0"
6"	6"	1'-0"	1'-0"	1'-0"	1'-0"
8"	6"	1'-0"	1'-0"	1'-0"	1'-0"
10"	6"	1'-4"	1'-4"	1'-4"	1'-0"
12"	8"	1'-4"	1'-4"	1'-4"	1'-0"
16"	10"	1'-6"	1'-6"	1'-6"	1'-4"
18"	12"	2'-8"	3'-0"	2'-10"	1'-10"
20"	14"	3'-0"	3'-6"	3'-0"	2'-0"
24"	16"	4'-6"	5'-0"	3'-6"	2'-4"
30"	20"	5'-6"	6'-0"	4'-4"	3'-0"
36"	24"	6'-0"	7'-0"	5'-0"	3'-9"
22 1/2" BENDS					
≤4"	4"	1'-0"	1'-0"	1'-0"	1'-0"
6"	6"	1'-0"	1'-0"	1'-0"	1'-0"
8"	6"	1'-0"	1'-0"	1'-0"	1'-0"
10"	6"	1'-4"	1'-0"	1'-0"	1'-4"
12"	8"	1'-4"	1'-4"	1'-0"	1'-4"
16"	10"	1'-6"	1'-10"	1'-4"	1'-6"
18"	12"	3'-6"	4'-0"	2'-0"	1'-10"
20"	14"	4'-0"	4'-6"	3'-0"	2'-0"
24"	16"	5'-0"	5'-8"	3'-6"	2'-4"
30"	20"	6'-0"	7'-0"	4'-4"	3'-0"
36"	24"	7'-0"	8'-0"	5'-0"	3'-9"

CONCRETE THRUST BLOCK DIMENSIONS					
X	A	B	C	D	D_1
45° BENDS					
≤4"	4"	1'-4"	1'-4"	1'-0"	1'-0"
6"	6"	1'-4"	1'-4"	1'-0"	1'-0"
8"	6"	1'-6"	1'-6"	1'-8"	1'-0"
10"	6"	1'-8"	2'-0"	1'-10"	1'-10"
12"	8"	1'-10"	2'-6"	2'-0"	2'-0"
16"	10"	2'-6"	3'-4"	2'-4"	2'-4"
18"	14"	4'-0"	5'-0"	3'-9"	2'-0"
20"	16"	5'-0"	6'-0"	4'-0"	2'-6"
24"	18"	6'-0"	7'-6"	4'-8"	3'-0"
30"	24"	7'-0"	10'-0"	6'-0"	3'-8"
36"	28"	8'-0"	11'-0"	8'-0"	4'-6"
90° BENDS & HYDRANTS					
≤4"	6"	1'-4"	2'-0"	1'-0"	1'-0"
6"	8"	1'-4"	2'-0"	1'-0"	1'-0"
8"	10"	1'-6"	2'-4"	1'-8"	1'-8"
10"	12"	2'-0"	3'-0"	2'-0"	1'-10"
12"	14"	2'-2"	3'-4"	2'-6"	2'-0"
16"	18"	2'-10"	4'-4"	3'-6"	2'-4"
18"	18"	4'-0"	6'-0"	4'-0"	2'-6"
20	24	5'-0"	7'-6"	4'-6"	2'-10"
24"	28"	8'-0"	10'-0"	5'-0"	3'-3"
30"	36"	9'-0"	12'-0"	7'-0"	4'-0"
36"	40"	12'-0"	15'-0"	9'-0"	5'-6"

CONCRETE THRUST BLOCK DIMENSIONS						
X	A	B	C	D	D_1	VOL. yd^3
REDUCERS						
3"x2"	6"	4"	8"	8"	6"	0.01
4"x2"	10"	4"	1'-0"	1'-0"	10"	0.01
6"x2"	1'-0"	5"	1'-6"	1'-6"	1'-0"	0.02
8"x3"	1'-6"	6"	2'-0"	2'-0"	1'-6"	0.06
10"x4"	2'-0"	8"	2'-6"	2'-6"	2'-0"	0.13
12"x4"	2'-5"	9"	3'-0"	3'-0"	2'-6"	0.21
14"x6"	3'-0"	12"	3'-6"	3'-6"	3'-0"	0.40
16"x6"	3'-0"	1'-3"	4'-0"	4'-0"	3'-0"	0.56
18"x8"	3'-6"	1'-5"	4'-3"	4'-3"	3'-6"	0.81
20"x10"	4'-0"	1'-6"	4'-6"	4'-6"	4'-0"	1.04
24"x12"	5'-0"	1'-8"	5'-6"	5'-6"	5'-0"	1.70
36"x18"	5'-6"	2'-2"	6'-6"	6'-6"	5'-6"	3.00
36"x20"	6'-0"	2'-6"	7'-9"	7'-9"	6'-0"	4.32

CONCRETE THRUST BLOCK DIMENSIONS						
X	A	B	C	D	D_1	VOL. yd^3
TEES AND VALVES						
≤4"	8"	1'-0"	1'-0"	1'-0"	8"	0.03
6"	1'-0"	1'-6"	1'-6"	1'-6"	1'-0"	0.05
8"	1'-4"	1'-6"	2'-0"	2'-0"	1'-6"	0.16
10"	1'-6"	2'-0"	2'-6"	2'-6"	2'-0"	0.40
12"	1'-9"	2'-6"	3'-0"	3'-0"	2'-6"	0.75
16"	2'-0"	2'-6"	4'-0"	4'-0"	3'-0"	1.00
18"	2'-3"	3'-0"	4'-6"	4'-6"	3'-6"	2.00
20"	2'-0"	4'-0"	5'-0"	5'-0"	4'-0"	2.40
24"	2'-0"	5'-0"	6'-0"	6'-0"	5'-0"	4.10
30"	3'-0"	6'-0"	7'-6"	7'-6"	6'-0"	7.90
36"	3'-6"	8'-0"	9'-0"	9'-0"	7'-0"	14.80

NOTES:
1. TABLE BASED ON 100 PSI & 2000 PSF ALLOWABLE SOIL BEARING PRESSURE. SPECIAL THRUST & REACTION BLOCKS WILL BE REQUIRED IN SOFT SAND, SOFT CLAY OR RECENTLY PLACED FILL.
2. CONSULT WITH ENGINEER IF DIFFERENT PRESSURE OR BEARING CAPACITY IS USED.
3. BLOCK HEIGHT SHALL BE EQUAL OR LESS THAT 1/2 THE TOTAL DEPTH TO THE BOTTOM OF THE BLOCK, BUT NOT LESS THAN THE PIPE DIAMETER.
4. GRIP RINGS (ROMAC INDUSTRIES, INC OR EQUAL) SHALL BE USED ON ALL PIPES 4" OR LARGER AT BLOW OFFS, ALL VALVES, WHERE PIPE CHANGES FROM PVC TO DUCTILE, AT REDUCERS, BENDS, AND ALL OTHERS FITTINGS. THRUST BLOCKS ARE ALSO REQUIRED AT THESE LOCATIONS.
5. VISQUEEN (PLASTIC SHEETING MATERIAL) SHALL BE PLACED BETWEEN FITTING AND THRUST BLOCK, WITH ALL BOLTS LEFT FREE OF CONCRETE AND ACCESSIBLE BY WRENCH.

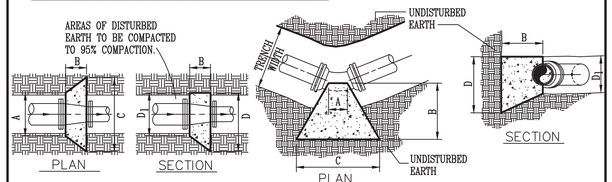

THRUST BLOCKS AND GRIP RINGS INSTALLATION DETAIL

NOT TO SCALE

NOTE:
ALL DISTURBED AREAS SHALL BE RESEEDED (EXCEPT WHERE PAVEMENT OR STONE IS TO BE PLACED) WITH ONE OF THE FOLLOWING MIXTURES:

PERMANENT COVER SEEDING MIXTURES

SEEDING DATES	GRASS SEED	PERCENTAGES
FEBRUARY 1 TO JULY 1	KENTUCKY 31 FESCUE	80%
	KOREAN LESPEDEZA	15%
	ENGLISH RYE	5%
JUNE 1 TO AUGUST 15	KENTUCKY 31 FESCUE	55%
	ENGLISH RYE	20%
	KOREAN LESPEDEZA	15%
	GERMAN MILLET	10%
APRIL 15 TO AUGUST 15	BERMUDA GRASS (HULLED)	70%
	ANNUAL LESPEDEZA	30%
AUGUST 1 TO DECEMBER 1	KENTUCKY 31 FESCUE	70%
	ENGLISH RYE	20%
	WHITE CLOVER	10%
FEBRUARY 1 TO DECEMBER 1	KENTUCKY 31 FESCUE	70%
	CROWN VETCH	25%
	ENGLISH RYE	5%

SEEDING DETAIL

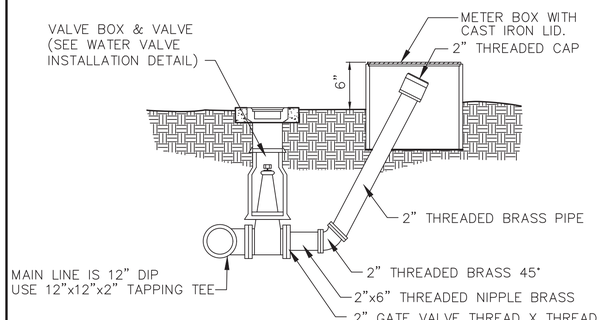

NOTES:

1. LOCATION OF BLOW OFF TO BE FIELD LOCATED AND APPROVED BY UTILITY DISTRICT. SEE NOTES ON PAGE U4-5.
2. SEE THRUST BLOCKS DETAIL.

IN LINE BLOW-OFF VALVE INSTALLATION FOR 12" LINE

NOT TO SCALE

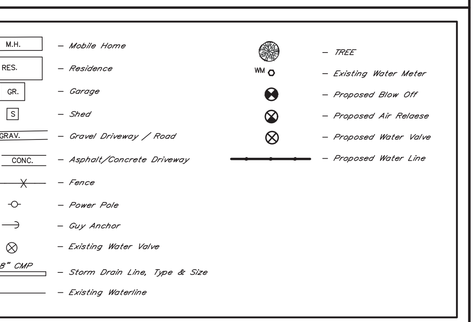

LEGEND

I, CATHY KYKER, A TENNESSEE REGISTERED ENGINEER HAVE STAMPED THE U4 WATERLINE DESIGN PORTION OF THE DRAWINGS INCLUDED IN THIS SET. THE WATERLINE DESIGN IS BASED UPON THE TDOT PLANS ISSUED FOR THIS PROJECT ON 07/27/2021.

REV. NO.	REVISION REMARKS	REV. DATE:	REV. BY:	REV. CHK. BY:
⚠	MOVED TYP. METER CONNECTION DETAIL FROM SHEET U4-5.	12/03/2021	LCF	CK

CATHY LAUREN KYKER — REGISTERED ENGINEER — AGRICULTURE — 0002095 — TENNESSEE — STATE OF TENNESSEE

W&W Engineering, LLC
150 West Summer Street
Suite 3
Greeneville, TN 37743
Phone No. 423-636-1770
Fax No. 423-638-5618

UNICOI WATER UTILITY DISTRICT
WATER LINE RELOCATION
CONSTRUCTION DETAILS

NOTES:

1. PIPE SHALL BE ENCASED IN CONCRETE UNDER STREAM BED. ENCASEMENT SHALL BE A MINIMUM OF 6" AROUND PIPE.

2. CHECK DAMS SHALL BE INSTALLED ON BOTH SIDES OF THE STREAM IN THE PIPE CONDUIT TRENCH.

3. IF COVER OVER PIPE IS LESS THAN 3 FEET THE ENCASEMENT OVER PIPE SHALL BE A MINIMUM OF 1 FOOT.

4. REFER TO SWPPP AND PERMITS OBTAINED BY TDOT. ALL WORK SHALL BE COMPLETED IN ACCORDANCE WITH TDEC REGULATIONS AND GENERAL ARAP FOR UTILITY LINE CROSSINGS IN EFFECT AT TIME OF CONSTRUCTION.

5. UPON COMPLETION, STREAM BANKS SHALL BE RETURNED AS NEARLY AS POSSIBLE TO ORIGINAL CONDITION. EROSION PREVENTION METHODS SHALL BE EMPLOYED TO PREVENT EROSION.

6. PIPE IN LIMITS OF STREAM CROSSING CONSTRUCTION, INCLUDING ALL BENDS, SHALL BE MECHANICAL JOINT RESTRAINED JOINT DUCTILE IRON.

7. ALL BENDS SHALL BE A MAXIMUM OF 22-1/2" (UNLESS OTHERWISE NOTED).

8. CONCRETE ENCASEMENT SHALL EXTEND FROM EDGE OF WATER TO EDGE OF WATER OR AS DIRECTED BY ENGINEER.

9. RIP-RAP SHALL BE TDOT CLASS A-1.

10. ALL D.I. PIPE GASKETS SHALL INCLUDE FIELD LOCK GASKETS.

11. REFER TO COFFERDAM CROSSING DETAIL.

12. RIP-RAP TO BE USED FOR STREAM BANK STABILIZATION WHERE APPLICABLE. IT IS NOT TO BE USED FOR STREAM BED. THE CONCRETE ENCASEMENT AND PIPE SHALL BE OVERLAIN WITH NATURAL BED MATERIAL TO THE MAXIMUM EXTENT POSSIBLE.

ENCASEMENT DETAIL

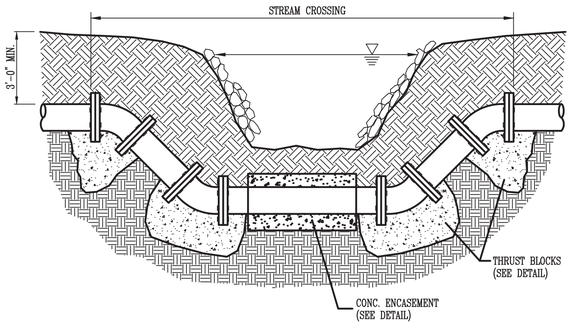

SECTION CREEK CROSSING DETAIL

NOT TO SCALE

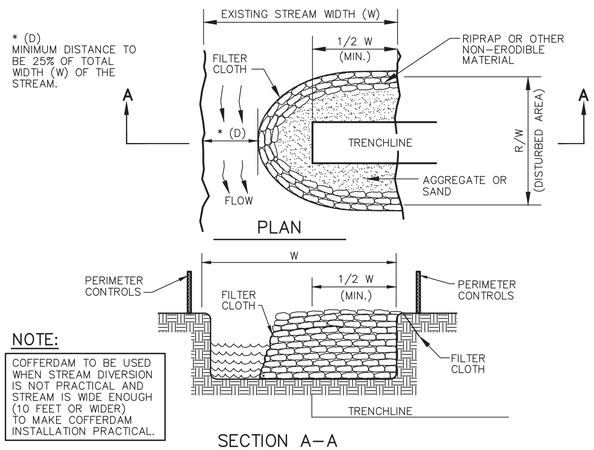

NOTE:

COFFERDAM TO BE USED WHEN STREAM DIVERSION IS NOT PRACTICAL AND STREAM IS WIDE ENOUGH (10 FEET OR WIDER) TO MAKE COFFERDAM INSTALLATION PRACTICAL.

COFFERDAM CROSSING DETAIL

NOT TO SCALE

⚠ ADDITIONAL PROJECT NOTES

1) The 12" waterline to be relocated serves the entire water district and cannot be taken out of service. The new section of 12" line must be installed, tested, disinfected and be in service before any work can be performed on the project that might damage or break the existing 12" line.
2) All work is to be completed in accordance with Unicoi Water Utility District Requirements, Plans and Specifications for this project, and all local, state and federal requirements.
3) Locations and sizes of all existing utilities are approximate. Contractor shall field locate all existing utilities prior to installation of waterline.
4) A notice shall be given to Unicoi Water Utility District at least 48 hours prior to any work being performed related to the waterline relocation work.
5) All pipe shall be installed in the presence of water utility representative.
6) Trench design and safety for pipeline construction is solely the responsibility of the contractor and shall conform to all applicable local, state and OSHA regulations. The trenches, including backfill, shall meet or exceed the requirements included in the plans and specifications for this project and TDOT standards.
7) A set of plans bearing TDEC's approval must be present on the project site at all times that work is going on.
8) Before any changes are made to the waterline work, the Manager of the Unicoi Water Utility District and TDOT must approve any field changes to approved plans. No increase in contract price for any field changes will be given unless written approval is received from TDOT prior to the work being completed.
9) A Soils and Geology Report was prepared by TDOT for this project (stamped 5/15/2020). The Contractor should review this and make their own site investigations and analysis in the preparation of the bid for this work. Claims for differing site conditions for the waterline portion of the project will not be considered related to absence or presence of subsurface rock or unstable conditions. Any information on the water utility plans that might indicate subsurface conditions is not to be considered as factual.
10) Six (6) copies of shop drawings of all materials used on the Unicoi waterline relocation portion of the project shall be submitted to the utility for approval and the approval received prior to installation of any material related to the relocation. All materials used must meet the requirements of Unicoi Water Utility District, TDEC and be approved for potable water use.
11) All materials used on the project shall meet the "Buy America Requirements" in 23 USC 313 and 23 CFR 635.410 and other applicable related provisions.
12) All new or modified lines must be tested and disinfected per TDEC requirements prior to being put into operation. See specifications.
13) Service line work must be completed in a manner so that the water customer has minimal interruption of service. The customer and the water district must be notified and the water district must approve of disruption of service prior to work being performed that would result in periods of time when water service would not be available to a customer. Approval will not be granted for any work that would result in a customer being without service more than 4 hours.
14) Contractor is to coordinate all waterline work with other contractors and other utilities on project. Profile shown is approximate. The depths of lines and horizontal locations may need to be adjusted to ensure they do not conflict with drainage structures, rip-rap, other utilities, etc. Waterline contractor shall review roadway and structure staking in the field prior to installing lines.
15) Contractor is to be aware that there is very limited working area and it is anticipated that some obstructions will be encountered. The contractor shall be responsible for exposing potential utility (or other) conflicts far enough ahead of pipeline construction to make necessary adjustments in grade and alignment of the new lines within the recommended limits of pipe and fitting deflection and/or the line depths specified. The contractor shall be responsible for requesting approval from Utility and TDOT to make necessary changes. All waterlines installed shall have a minimum cover of 36" measured from the top of the pipe to finished grade. A greater depth may be necessary to avoid underground obstructions. A minimum of six inches clearance shall be maintained between the pipe and obstructions. See specifications for TDEC requirements for crossing sewer lines. In all areas there shall be sufficient separation between the water line and the gas line. There shall be a horizontal separation of 36" where possible. If the minimum separation of 36" cannot be maintained or where the waterline crosses the gas line, then the gas line is to be installed below the water line with a minimum vertical separation of 18" while still maintaining the minimum depth and cover over the waterline of 36". See gas line relocation drawings form additional information. Water line Contractor shall coordinate with gas line installer in this area.
16) All lines installed under proposed or existing pavement or shoulders must be backfilled with stone and compacted per TDOT specifications.
17) All asphalt, concrete, grass or other surfaces that are disturbed for installation of waterline shall be restored to original condition by waterline contractor unless otherwise approved by TDOT. Excavating, Backfill, and surface restoration are considered incidental and will not be considered for payment but shall be part of the in-place cost of placing the utility item within the ROW.
18) The waterline contractor shall follow the SWPPP prepared for this project. In addition, the waterline contractor shall install structural controls and use BMPs as necessary to prevent erosion, prevent sediment from entering the stream, and to meet TDEC regulations. See Standard General Note 6. No direct payment will be made for this item in waterline portion of the contract.
19) Existing lines are to be connected to as shown on drawings. Actual materials and sizes of existing lines shall be field verified.
20) A blow off on the new 12" line is included in the Table of Quantities. This blow off is to be used for flushing prior to taking bacteriological sample. The exact location is to be field located. Location must be approved by Utility. If the water being flushed contains chlorine the contractor shall locate the blow off in a location where the water will not enter the stream unless provision for de-chlorination has been made.
21) Once the new 12" stream crossing is in place (Creek Crossing #1), has been tested, disinfected, and is in operation then the existing 12" line that now crosses the creek can be abandoned. The old 12" line can be "abandoned in place" by simply closing the two new insertion valves if the existing line has not been disturbed (or will not be disturbed) by the project between the two valves. If sections of the old line will be taken out by the bridge and highway project, then the old line must be cut near each insertion valve and capped. A concrete thrust block shall also be installed behind each cap to prevent any movement of the new insertion valves.

⚠ STANDARD GENERAL NOTES

1) Except for erosion sediment control items, no Roadway or Bridge Items shall be utilized to compensate for work methods or materials associated with and/or specified for utility installation, even though the same or similar roadway or bridge materials may have been called for in the Utility Specifications or drawings.
2) All materials, methods, and/or integral materials outlined in the utility specifications or drawings necessary to provide a complete and functional installation just be included in the Unit Price for the associated Utility Work Item.
3) The contractor must maintain all services during the construction of the relocated facility. Any costs associated with installation of required temporary service lines due to the roadway construction sequence of work (i.e. cuts, fills, phasing, etc.) shall be included in the cost of the permanent utility items.
4) It shall be the responsibility of the Prime Contractor's surveyor to lay out all the facilities being relocated within the contract.
5) For buried utilities, the Prime contractor or subcontractor shall be required to provide to the Utility upon completion of the Utility's relocation work a set of as-built drawings for their records. These as-built drawings should be prepared as the job progresses to ensure their accuracy.
6) Where erosion control measures are needed for the utility relocation work occurring inside or outside State right-of-way, the contractor shall submit to the TDOT Project Supervisor for approval a proposed erosion and sediment control plan prior to beginning the work. TDOT approval must be received before the erosion control pay items for roadway construction can be used for any additional erosion control measures required for the utility relocation work.
7) Driveway, sidewalk and roadway temporary restoration shall be part of the in-place cost of placing the utility item within the ROW.
8) Any excavation of the stream channel area shall be separated from flowing water and accomplished during low flow conditions. This shall be accomplished by the use of flumes, lined diversion channel with sandbag berm, diversion pipe with sandbag dam at pipe inlet, or in some cases cofferdams. Alternatively, based on field conditions and contractor selection, the utility relocation may be accomplished using ore technology with no stream channel impacts.

BLOW-OFF GATE VALVE SHALL BE 2" THREADED. KENNEDY MODEL 7057, OR EQUAL.
BLOW-OFF PAY ITEM #795-10.31 INCLUDES THE FOLLOWING:
2" GATE VALVE, VALVE BOX, OUTLET PIPING, CAP, THRUST BLOCKS, FITTINGS, METER BOX & LID.

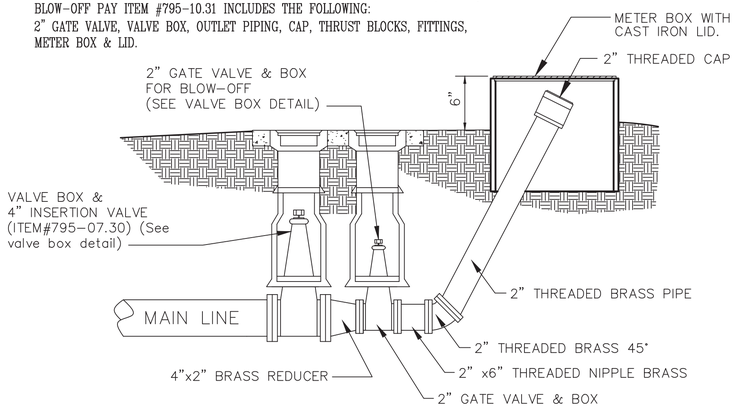

2" END OF LINE BLOW-OFF INSTALLATION ON 4" LINE

NOT TO SCALE

TYPE	YEAR	PROJECT NO.	SHEET NO.
CONST.	2022	BR-STP-107(28)	U4-5

S.R. 107 UNICOI COUNTY
86006-3235-94 (CONST.)

REFER TO SWPPP FOR THIS PROJECT FOR SEEDING, STRUCTURAL CONTROL LOCATIONS, ETC. THE FOLLOWING BPM ARE TO BE USED UNLESS THEY ARE IN CONFLICT WITH SWPPP. CONTRACTOR SHALL TAKE MEASURES NECESSARY TO COMPLY WITH TDEC REGULATIONS AND TO PREVENT ANY SILTATION FROM LEAVING SITE.

REMOVAL OF VEGETATION WILL BE MINIMIZED, PARTICULARLY ANY WOODY VEGETATION PROVIDING SHORELINE/STREAMBANK STABILIZATION.

CONTRACTOR IS TO INSTALL COFFERDAMS AND/OR SILT CONTROL STRUCTURES BETWEEN CONSTRUCTION AREAS AND SURFACE WATERS PRIOR TO ANY SOIL-DISTURBING CONSTRUCTION ACTIVITY, AND CLARIFICATION OF ALL WATER THAT ACCUMULATES BEHIND THESE DEVICES TO MEET STATE WATER QUALITY CRITERIA "AT THE STREAM MILE WHERE ACTIVITY OCCURS" BEFORE IT IS RETURNED TO THE "UNAFFECTED PORTION OF THE STREAM". COFFERDAMS MUST BE USED WHEREVER CONSTRUCTION ACTIVITY IS AT OR BELOW WATER ELEVATION.

CONTRACTOR IS TO KEEP EQUIPMENT OUT OF THE RESERVOIR OR STREAM AND OFF RESERVOIR OR STREAM BANKS, TO THE EXTENT PRACTICABLE (i.e., PERFORMING WORK "IN THE DRY").

CONTRACTOR IS TO AVOID CONTACT OF WET CONCRETE WITH THE STREAM OR RESERVOIR, AND AVOID DISPOSING OF CONCRETE WASHINGS, OR OTHER SUBSTANCES OR MATERIALS, IN THOSE WATERS.

CONTRACTOR IS TO USE EROSION CONTROL STRUCTURES AROUND ANY MATERIAL STOCKPILE AREAS.

CONTRACTOR TO APPLY CLEAN/SHAKEN RIP-RAP OR SHOT ROCK (WHERE NEEDED AT WATER/BANK INTERFACE) OVER WATER PERMEABLE/SOIL PERMEABLE FABRIC OR GEOTEXTILE AND IN SUCH A MANNER AS TO AVOID STREAM SEDIMENTATION OR DISTURBANCE, OR THAT ANY ROCK USED FOR COVER AND STABILIZATION SHALL BE LARGE ENOUGH TO PREVENT WASHOUT AND PROVIDE GOOD AQUATIC HABITAT.

CONTRACTOR TO REMOVE, REDISTRIBUTE, AND STABILIZE (WITH VEGETATION) ALL SEDIMENT WHICH ACCUMULATES BEHIND COFFERDAMS OR SILT CONTROL STRUCTURES.

CONTRACTOR TO USE VEGETATION (VERSUS RIP-RAP) WHEREVER PRACTICABLE AND SUSTAINABLE TO STABILIZE STREAMBANKS, SHORELINES, AND ADJACENT AREAS. THESE AREAS WILL BE STABILIZED AS SOON AS PRACTICABLE, USING EITHER AN APPROPRIATE SEED MIXTURE THAT INCLUDES AN ANNUAL (QUICK COVER) AS WELL AS ONE OR TWO PERENNIAL LEGUMES AND ONE OR TWO PERENNIAL GRASSES, OR SOD.

IN WINTER OR SUMMER, THIS WILL REQUIRE INITIAL PLANTING OF A QUICK COVER ANNUAL ONLY, TO BE FOLLOWED BY SUBSEQUENT ESTABLISHMENT OF THE PERENNIALS. SEED AND SOIL WILL BE PROTECTED AS APPROPRIATE WITH EROSION CONTROL NETTING AND/OR MULCH AND PROVIDE ADEQUATE MOISTURE. STREAMBANK AND SHORELINE AREAS WILL ALSO BE PERMANENTLY STABILIZED WITH NATIVE WOODY PLANTS, TO INCLUDE TREES WHEREVER PRACTICABLE AND SUSTAINABLE (THIS VEGETATIVE PRESCRIPTION MAY BE ALTERED IF DIRECTED BY GEOLOGIC CONDITIONS OR LANDOWNER REQUIREMENTS). CONTRACTOR SHALL ALSO INSTALL OR PERFORM ADDITIONAL EROSION CONTROL STRUCTURES/TECHNIQUES DEEMED NECESSARY BY TDEC.

BEST MANAGEMENT PRACTICES FOR WATER LINE INSTALLATION

NOT TO SCALE

I, CATHY KYKER, A TENNESSEE REGISTERED ENGINEER HAVE STAMPED THE U4 WATERLINE DESIGN PORTION OF THE DRAWINGS INCLUDED IN THIS SET. THE WATERLINE DESIGN IS BASED UPON THE TDOT PLANS ISSUED FOR THIS PROJECT ON 07/27/2021.

REV. NO.	REVISION REMARKS	REV. DATE:	REV. BY:	REV. CHK. BY:
⚠	REVISED NOTES	08/02/2023	LCF	CK
⚠	MOVED TYP. METER CONNECTION DETAIL TO SHEET U4-4 AND ADDED THIS SHEET NOTES.	12/03/2021	LCF	CK

CATHY MARIE KYKER REGISTERED ENGINEER AGRICULTURE NO. 0002095 STATE OF TENNESSEE 07/27/2021

W&W Engineering,LLC
100 West Summer Street
Suite 3
Greeneville, TN 37743
Phone No. 423-639-2770
Fax No. 423-638-8610

UNICOI WATER UTILITY DISTRICT WATER LINE RELOCATION

CONSTRUCTION DETAILS & NOTES

TENNESSEE D.O.T. | DESIGN DIVISION | FILE NO.

UTILITIES INDEX

SHEET NAME	SHEET NUMBER
ESTIMATED QUANTITIES	U5-1
GENERAL NOTES AND LEGEND	U5-2
BLANK	U5-3
UTILITY RELOCATION WATER - STA. 0+00 TO STA. 7+98	U5-4
WATER DETAILS	U5-5
WATER DETAILS	U5-6
WATER DETAILS	U5-7

TYPE	YEAR	PROJECT NO.	SHEET NO.
CONST.	2022	BR-STP-107(28)	U5-1

SR-107 UNICOI
86006-3235-94
PIN # 124631.00

ESTIMATED UTILITY QUANTITIES

	ITEM NO.	DESCRIPTION	UNIT	Project No. 1: 86006-3235-94 QUANTITY	% Utility Betterment	%Project Public	%Project Private
1*	795-01.01	4IN DIP RESTRAINED JOINT WATER LINE	L.F.	10	0.00%	100.00%	0.00%
1*	795-01.05	8IN DIP RESTRAINED JOINT WATER LINE	L.F.	740	40.04%	57.40%	2.56%
12*	795-06.32	CUT AND CAP 4IN WATER LINE	EA	2	0.00%	100.00%	0.00%
4*	795-07.01	4IN X 4IN TAPPING SLEEVE AND VALVE	EA	2	0.00%	100.00%	0.00%
5*	795-08.05	8IN GATE VALVE ASSEMBLY	EA	2	0.00%	0.00%	100.00%
13*	795-09.09	RELOCATE/RECONNECT SERVICE ASSEMBLY	EA	3	0.00%	100.00%	0.00%
9*	795-11.12	RETIRE IN PLACE EXISTING WATER MAIN	L.F.	775	0.00%	100.00%	0.00%
9*	795-12.07	REMOVE EXISTING VALVE	EA	2	0.00%	100.00%	0.00%
14*	795-13.05	CREEK CROSSING #1	EA	1	0.00%	0.00%	100.00%

1* INCLUDES ALL MATERIALS, LABOR, EQUIPMENT FOR COMPLETE INSTALLATION OF PIPE INCLUDING, BUT NOT LIMITED, TO TRAFFIC CONTROL, MATERIALS, EQUIPMENT, EXCAVATION IN BOTH UNCONSOLIDATED AND ROCK, REMOVAL AND REPLACEMENT OF UNSUITABLE SOIL, ENVELOPE/BEDDING MATERIAL, BACKFILLING, FLOWABLE FILL, THRUST BLOCKING, FITTINGS, GLANDS, RESTRAINED JOINT GASKETS, CONCRETE DEADMAN, PIPE FUSION, TRACER WIRE, WARNING TAPE, APPURTENANCES, TEMPORARY/PERMANENT SHORING, MAINTAINING THE TRENCH, TESTING, FLUSHING, DISINFECTION, BACTERIOILOGICAL SAMPLING, TEMPORARY/PERMANENT SURFACE RESTORATION. AND ANY OTHER LABOR OR MATERIAL REQUIRED TO COMPLETE THE WORK AS SPECIFIED ON THE PLANS. THE PIPE CROSSING UNDER THE CREEK FROM STA. 1+42 TO STA. 2+02 SHALL BE PAID UNDER THE CREEK CROSSING ITEM.

4* INCLUDES ALL MATERIALS, LABOR AND EQUIPMENT INCLUDING BUT NOT LIMITED TO TAPPING SLEEVE, VALVE, VALVE BOX, BOX ADJUSTMENT, VALVE BOX COLLAR, VALVE MARKER, EXCAVATION, BEDDING, BACKFILL, BLOCKING AND RESTRAINT, TAP OF EXISTING LINE, AND TRAFFIC CONTROL.

5* INCLUDES ALL MATERIALS, LABOR AND EQUIPMENT INCLUDING BUT NOT LIMITED TO FITTINGS, VALVE, VALVE STEM EXTENSIONS, VALVE BOX AND COVER, BOX ADJUSTMENT, VALVE BOX COLLAR, VALVE MARKER, EXCAVATION, BEDDING, BACKFILL, BLOCKING, AND TRAFFIC CONTROL.

9* INCLUDES ALL MATERIALS, LABOR AND EQUIPMENT FOR REMOVAL OR RETIREMENT OF ITEM AS SPECIFIED ON THE BID FORM AND IN NOTE 16 ON SHEET U5-2, INCLUDING TRAFFIC CONTROL.

12* INCLUDES ALL MATERIALS, LABOR AND EQUIPMENT TO CUT AND CAP THE EXISTING LINES TO BE RETIRED AS DESCRIBED IN THE PLANS.

13* INCLUDES ALL MATERIALS, LABOR AND EQUIPMENT FOR REMOVAL OF EXISTING WATER SERVICE METER ASSEMBLY AND INSTALLING AT NEWLY IDENTIFIED LOCATION.

14* INCLUDES ALL MATERIALS, LABOR AND EQUIPMENT FOR COMPLETE INSTALLATION OF PIPE CROSSING UNDER THE CREEK FROM STA. 1+42 TO STA. 2+02 INCLUDING BUT NOT LIMITED TO DEWATERING, WATER DIVERSION, CONCRETE ENCASEMENT, AND AS SPECIFIED IN FOOTNOTE NO. 1.

UTILITY COMPANY CONTACT

CITY OF JOHNSON CITY
601 E. MAIN STREET
JOHNSON CITY, TN 37605-2150
CONTACT: TOM WITHERSPOON
DIRECTOR OF WATER AND SEWER SERVICES
423-434-6062

SEALED BY

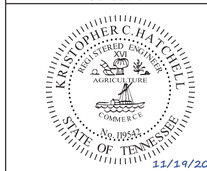

11/19/2021

BARGE DESIGN SOLUTIONS
520 West Summit Hill Drive // Suite 1202 // Knoxville, Tennessee 37902
PHONE (865) 637-2810 // FAX (865) 673-8654
BARGE PROJECT NO. 36427-08

JOHNSON CITY
TENNESSEE

ESTIMATED QUANTITIES

11/19/2021
F:\36\36427\36427-08\04-CAD\WATR\PLOT\36427-08U5-1.SHT

TENNESSEE D.O.T.
DESIGN DIVISION
FILE NO.

TYPE	YEAR	PROJECT NO.	SHEET NO.
CONST.	2022	BR-STP-107(28)	U5-2

SR-107 UNICOI
86006-3235-94
PIN # 124631.00

GENERAL NOTES:

1. ALL CORRESPONDENCE TO TDOT SHALL BE ADDRESSED TO TENNESSEE DEPARTMENT OF TRANSPORTATION, REGION 1, 7345 REGION LANE, KNOXVILLE, TENNESSEE 37914. A COPY OF ALL CORRESPONDENCE ADDRESSED TO TDOT SHALL BE COPIED TO THE UTILITY.
2. ALL CORRESPONDENCE, SUBMITTALS OR OTHER ITEMS ASSOCIATED WITH THE CONTRACT SHALL BE IDENTIFIED WITH THE PROJECT OWNER, PROJECT NAME, AND TDOT PIN NUMBER AS LISTED IN THE CONTRACT DOCUMENTS.
3. CLEARING AND CLEANING OF PROJECT SITE OF PLANT LIFE AND DEBRIS SHALL BE UNDER GENERAL AGREEMENT WITH TDOT AND PRIME CONTRACTOR.
4. ALL EROSION AND SEDIMENTATION CONTROL OF PROJECT SITE SHALL BE UNDER GENERAL AGREEMENT WITH TDOT AND PRIME CONTRACTOR AND IN ACCORDANCE WITH TDEC PERMITS. UTILITY CONTRACTOR SHALL COMPLY WITH ALL REQUIREMENTS OF WATER QUALITY PERMITS AND STORM WATER POLLUTION PREVENTION PLAN.
5. EXISTING UNDERGROUND INSTALLATIONS INDICATED ON THE DRAWINGS ARE APPROXIMATE. THERE IS NO GUARANTEE AS TO THE ACCURACY AND COMPLETENESS OF SUCH INFORMATION AND ALL RESPONSIBILITY FOR ACCURACY IS EXPRESSLY DISCLAIMED. CONTRACTOR SHALL CONTACT TENNESSEE ONE CALL (DIAL 811) FOR ACTUAL EXISTING UTILITY LOCATIONS. THE CONTRACTOR IS SOLELY RESPONSIBLE FOR LOCATING ALL UNDERGROUND INSTALLATIONS. THE CONTRACTOR SHALL USE ITS OWN INFORMATION AND SHALL NOT RELY UPON INFORMATION INDICATED ON THE DRAWINGS CONCERNING EXISTING UNDERGROUND INSTALLATIONS.
6. IN THE EVENT OF DAMAGE TO EXISTING UTILITIES, THE CONTRACTOR WILL BE RESPONSIBLE FOR ALL REPAIRS AND RELATED EXPENSE.
7. ANY TEMPORARY OR PERMANENT PAVEMENT REPAIR SHALL BE IN ACCORDANCE WITH THE ROADWAY CONTRACT.
8. THE GENERAL NOTES AND SPECIFICATIONS CONTAIN MINIMUM REQUIREMENTS FOR THIS PROJECT. UTILITY CONSTRUCTION SHALL ALSO CONFORM TO THE REQUIREMENTS OF THE ROADWAY CONTRACT AND THE UTILITY'S STANDARD SPECIFICATION.
9. THE CONTRACTOR MUST PERFORM ALL CONSTRUCTION WITHIN RIGHTS-OF-WAY OR EASEMENTS.
10. IT IS THE CONTRACTOR'S RESPONSIBILITY TO MAINTAIN ALL UTILITY SERVICES DURING CONSTRUCTION. MAINTAIN A LIST OF EMERGENCY CONTACTS FOR EACH UTILITY IN CASE OF ACCIDENTAL UTILITY DAMAGE.
11. THE CONTRACTOR SHALL FOLLOW ALL OSHA REGULATIONS PERTAINING TO CONSTRUCTION OPERATIONS.
12. DURING CONSTRUCTION, THE CONTRACTOR SHALL BE REQUIRED TO PROVIDE TEMPORARY TRAFFIC CONTROL MEASURES TO ENSURE ACCESS AND SAFETY AT ALL TIMES FOR MOTORISTS, PEDESTRIANS, RESIDENTS, BUSINESSES, ETC.
13. ALL AREAS DISTURBED DURING CONSTRUCTION SHALL BE REPAIRED IN ACCORDANCE WITH THE ROADWAY CONTRACT.
14. CONTRACTOR SHALL POT HOLE EXISTING UTILITIES TO VERIFY DEPTHS. ANY ADJUSTMENTS TO HORIZONTAL OR VERTICAL ALIGNMENTS TO AVOID ANY EXISTING UTILITIES SHALL BE APPROVED BY UTILITY OWNER PRIOR TO INSTALLATION.
15. A MINIMUM OF 36 INCHES OF COVER IS REQUIRED OVER ALL NEW WATER AND SEWER UTILITIES, UNLESS NOTED OTHERWISE ON THE PLANS.
16. ALL UTILITY MAINS LARGER THAN 6 INCHES THAT ARE TO BE REMOVED/RETIRED MAY BE PLUGGED AND FILLED WITH GROUT, IN LIEU OF BEING REMOVED, IF THE PROPOSED ROADWAY GRADING ALLOWS FOR THE PIPE TO REMAIN. ALL REMOVE/RETIRE SHALL BE PERFORMED BY THE CONTRACTOR. VALVES REMOVED SHALL BE RETURNED TO THE CITY OF JOHNSON CITY.
17. WATER METERS SHOWN ON THE DRAWINGS SHALL BE LOCATED ON THE PROPERTY LINE.
18. ALL SOLID SLEEVES SHALL BE RESTRAINED.
19. VALVE PLACEMENTS AT LINE INTERSECTIONS SHALL BE ADJUSTED AS NECESSARY.
20. ALL WATER MAIN FITTINGS (BENDS, TEES, VALVES, ETC.) SHALL BE MECHANICAL JOINT UNLESS OTHERWISE SHOWN ON DRAWINGS. WHERE SHOWING RESTRAINED JOINT, FITTINGS AND VALVES SHALL BE INSTALLED WITH RETAINER GLANDS. IN ADDITION, THE CONTRACTOR SHALL USE RESTRAINED JOINT PIPE OR JOINT-RESTRAINING GASKETS AT ALL PIPE JOINTS FALLING WITHIN THE AREAS OF RESTRAINED JOINT PIPE. THE CONTRACTOR IS ADVISED TO ANTICIPATE THE JOINT RESTRAINT REQUIREMENTS OF UPCOMING FITTINGS SO THAT IN-LINE JOINTS THAT REQUIRE RESTRAINT MAY BE RESTRAINED AS PIPE IS LAID.
21. THE HORIZONTAL BEND FITTINGS SHOWN ON THE DRAWINGS ARE NOT NECESSARILY ALL OF THE BEND FITTINGS REQUIRED FOR THE INSTALLATION OF THE WATER MAIN. IF ADDITIONAL FITTINGS ARE USED, PROPER RESTRAINT SHALL BE USED AS OUTLINED IN NOTE 20.
22. ALL CONNECTIONS TO EXISTING PRESSURIZED MAINS SHALL HAVE CONCRETE THRUST BLOCKS AT CONNECTION BEND OR VALVE TO PROPERLY RESTRAIN THE EXISTING LINE.
23. CONTRACTOR SHALL COMPLY WITH BUY AMERICA REQUIREMENTS PER STATE OF TENNESSEE SP106A.
24. ALL WATER MAIN CONSTRUCTION SHALL BE PERFORMED IN ACCORDANCE WITH THE PROJECT PLANS AND CITY OF JOHNSON CITY WATER STANDARD OPERATING PROCEDURES. CONTRACTOR SHALL COORDINATE WITH CITY OF JOHNSON CITY TO ENSURE COMPLIANCE WITH THEIR STANDARD OPERATING PROCEDURES. ADDITIONALLY, CONSTRUCTION SHALL BE PERFORMED IN ACCORDANCE WITH THE TENNESSEE DEPARTMENT OF ENVIRONMENT AND CONSERVATION AND OTHER RELATED GOVERNMENT AGENCY(S) REQUIREMENTS. CITY OF JOHNSON CITY STANDARD SPECIFICATIONS FOR WATERLINE AND SEWERLINE CONSTRUCTION ARE AVAILABLE ON THE CITY OF JOHNSON CITY'S WEBSITE LOCATED UNDER WATER AND SEWER ENGINEERING DEPARTMENT, ENGINEERING DOCUMENTS. ANY TRAFFIC CONTROL, CLEARING AND GRUBBING, EROSION CONTROL, ELECTRICAL AND COMMUNICATION, ROADWAY CONSTRUCTION, SIDEWALK CONSTRUCTION, STORM DRAINAGE, ROADWAY SAFETY OR MEASUREMENT AND PAYMENT SHALL BE SUPERSEDED BY TDOT REQUIREMENTS.
25. CONTRACTOR SHALL INTERCEPT EXISTING WATER SERVICES, CONNECT TO EXISTING LINE, AND SET NEW WATER METER ON ROW UNLESS DIRECTED OTHERWISE BY THE CITY OF JOHNSON CITY.
26. FOR WATERLINE UNDER PAVEMENT, TDOT BEDDING AND BACKFILL MATERIALS SHALL BE USED PER SPECIFICATION SECTION 02221.
27. THE CONTRACTOR SHALL GIVE THE CITY OF JOHNSON CITY FIVE BUSINESS DAYS NOTIFICAITON FOR ALL PLANNED WATER CONNECTIONS TO EXISTING LINES.
28. ALL WORK DONE ON THE CUSTOMER SIDE OF WATER METER SHALL BE BY LICENSED PLUMBER. CONSTRUCTION SHALL BE COORDINATED WITH EACH SPECIFIC PROPERTY OWNER/CUSTOMER. THE CITY OF JOHNSON CITY SHALL SUPPLY AND SET ALL METERS IN THE CONTRACTOR INSTALLED ASSEMBLY.
29. ALL TAPPING VALVES AND SLEEVES AND ALL DEAD END CAPS SHALL RECEIVE THRUST BLOCKING OR OTHER MEANS OF RESTRAINT TO PREVENT EXISTING PIPE JOINTS FROM SEPARATING.
30. CONTRACTOR WILL BE RESPONSIBLE FOR MAINTAINING DRAINAGE THROUGH THE PROJECT DURING CONSTRUCTION.
31. THE UTILITY WORK IN THIS PROJECT SHALL HAVE A ONE-YEAR WARRANTY PERIOD. THE CONTRACTOR SHALL REQUEST FINAL COMPLETION OF UTILITY WORK IN WRITING TO THE CITY OF JOHNSON CITY. THE CITY WILL INSPECT THE WORK AND WILL EITHER PROVIDE A LIST OF UNCOMPLETED ITEMS OR ISSUE A FINAL UTILITY CERTIFICATION. THE ONE-YEAR WARRANTY PERIOD SHALL COMMENCE WHEN THE FINAL UTILITY CERTIFICATION IS ISSUED.
32. CONTRACTOR SHALL BE RESPONSIBLE FOR PROMPTLY REMOVING ALL WASTE, SCRAP, DEBRIS AND DEMOLISHED MATERIAL FROM THE SITE AND LEGALLY DISPOSING. MATERIALS AND EQUIPMENT SHALL BE REMOVED FROM THE SITE WHEN THEY ARE NO LONGER NECESSARY. STORAGE OF WASTE MATERIALS ON THE PROJECT SITE IS PROHIBITED.

TDOT STANDARD GENERAL NOTES:

1. EXCEPT FOR EROSION SEDIMENT CONTROL ITEMS, NO ROADWAY OR BRIDGE ITEMS SHALL BE UTILIZED TO COMPENSATE FOR WORK METHODS OR MATERIALS ASSOCIATED WITH AND/OR SPECIFIED FOR THE UTILITY INSTALLATION, EVEN THOUGH THE SAME OR SIMILAR ROADWAY OR BRIDGE MATERIALS MAY HAVE BEEN CALLED FOR IN THE UTILITY SPECIFICATIONS OR DRAWINGS.
2. ALL MATERIALS, METHODS, AND/OR INTEGRAL MATERIALS OUTLINED IN THE UTILITY SPECIFICATIONS OR DRAWINGS NECESSARY TO PROVIDE A COMPLETE AND FUNCTIONAL INSTALLATION MUST BE INCLUDED IN THE UNIT PRICE FOR THE ASSOCIATED UTILITY WORK ITEM.
3. THE CONTRACTOR MUST MAINTAIN ALL SERVICES DURING THE CONSTRUCTION OF THE RELOCATED FACILITY. ANY COSTS ASSOCIATED WITH INSTALLATION OF REQUIRED TEMPORARY SERVICE LINES DUE TO THE ROADWAY CONSTRUCTION SEQUENCE OF WORK (I.E., CUTS, FILLS, PHASING, ETC.) SHALL BE INCLUDED IN THE COST OF THE PERMANENT UTILITY ITEMS.
4. IT SHALL BE THE RESPONSIBILITY OF THE PRIME CONTRACTOR'S SURVEYOR TO LAY OUT ALL THE FACILITIES BEING RELOCATED WITHIN THE CONTRACT.
5. FOR BURIED UTILITIES, THE PRIME CONTRACTOR OR SUBCONTRACTOR SHALL BE REQUIRED TO PROVIDE TO THE UTILITY UPON COMPLETION OF THE UTILITY'S RELOCATION WORK A SET OF AS-BUILT DRAWINGS FOR THEIR RECORDS. THESE AS-BUILT DRAWINGS SHOULD BE PREPARED AS THE JOB PROGRESSES TO ENSURE THEIR ACCURACY.
6. WHERE EROSION CONTROL MEASURES ARE NEEDED FOR THE UTILITY RELOCATION WORK OCCURRING INSIDE OR OUTSIDE STATE RIGHT-OF-WAY, THE CONTRACTOR SHALL SUBMIT TO THE TDOT PROJECT SUPERVISOR FOR APPROVAL A PROPOSED EROSION AND SEDIMENT CONTROL PLAN PRIOR TO BEGINNING THE WORK. TDOT APPROVAL MUST BE RECEIVED BEFORE THE EROSION CONTROL PAY ITEMS FOR ROADWAY CONSTRUCTION CAN BE USED FOR ANY ADDITIONAL EROSION CONTROL MEASURES REQUIRED FOR THE UTILITY RELOCATION WORK.
7. DRIVEWAY, SIDEWALK AND ROADWAY TEMPORARY RESTORATION SHALL BE PART OF THE IN-PLACE COST OF PLACING THE UTILITY ITEM WITHIN THE ROW.
8. ANY EXCAVATION OF THE STREAM CHANNEL AREA SHALL BE SEPARATED FROM FLOWING WATER AND ACCOMPLISHED DURING LOW FLOW CONDITIONS. THIS SHALL BE ACCOMPLISHED BY THE USE OF FLUMES, LINED DIVERSION CHANNEL WITH SANDBAG BERM, DIVERSION PIPE WITH SANDBAG DAM AT PIPE INLET, OR IN SOME CASES COFFERDAMS. ALTERNATIVELY, BASED ON FI ELD CONDITIONS AND CONTRACTOR SELECTION, THE UTILITY RELOCATION MAY BE ACCOMPLISHED USING BORE TECHNOLOGY WITH NO STREAM CHANNEL IMPACTS.

LEGEND

24" W	PROPOSED WATER LINE
8" SA	PROPOSED SANITARY SEWER LINE
8" FMS	PROPOSED FORCE MAIN
24" W	EXISTING WATER LINE TO REMAIN
8" SA	EXISTING SEWER LINE TO REMAIN
8" FMS	EXISTING FORCE MAIN TO REMAIN
24" W	EXISTING WATERLINE TO REMOVE/RETIRE
8" SA	EXISTING SEWER LINE TO REMOVE/RETIRE
8" FMS	EXISTING FORCE MAIN TO REMOVE/RETIRE
W	EXISTING WATER LINE (FROM BARGE SURVEY)
PL	PROPERTY LINE
	EASEMENT LINE
	EXISTING SANITARY MANHOLE
	PROPOSED SANITARY MANHOLE
	EXISTING SANITARY MANHOLE TO REMAIN
	EXISITNG SANITARY MANHOLE TO REMOVE/RETIRE
	PROPOSED AIR RELEASE VALVE
	PROPOSED VALVE
122	PROPERTY NUMBER
	CATCH BASIN
	TRAFFIC SIGNAL POLE
	CONTROL POINT
	EXISTING FIRE HYDRANT TO REMAIN
	PROPOSED WATER METER
	EXISTING WATER METER TO REMAIN
	EXISTING WATER METER TO BE REMOVED
DI	DUCTILE IRON
DIP	DUCTILE IRON PIPE
CI	CAST IRON
CIP	CAST IRON PIPE
AC	ASBESTOS CEMENT (TRANSITE)
CU	COPPER
PVC	POLYVINYL CHLORIDE
HDPE	HIGH-DENSITY POLYETHYLENE
EOL	END OF LINE
IE	INVERT ELEVATION
LF	LINEAR FEET
MH	MANHOLE
MJ	MECHANICAL JOINT
RJ	RESTRAINED JOINT
RJP	RESTRAINED JOINT PIPE
SA	SANITARY SEWER
STA	STATION
TBA	TO BE REMOVED/RETIRED
TC	TOP OF CASTING
JCWS	CITY OF JOHNSON CITY WATER AND SEWER SERVICES
NTS	NOT TO SCALE
TS&V	TAPPING SLEEVE AND VALVE
GV	GATE VALVE

SEALED BY

11/19/2021

BARGE DESIGN SOLUTIONS
520 West Summit Hill Drive // Suite 1202 // Knoxville, Tennessee 37902
PHONE (865) 637-2810 // FAX (865) 673-8554
BARGE PROJECT NO. 36427-08

JOHNSON CITY
TENNESSEE

GENERAL NOTES AND LEGEND

11/19/2021
F:\36\36427\364270B\04_CAD\WATR\PLOT\364270BU5-2.SHT

TENNESSEE D.O.T.
DESIGN DIVISION
FILE NO.

TYPE	YEAR	PROJECT NO.	SHEET NO.
CONST.	2022	BR-STP-107(28)	U5-3

SR-107 UNICOI
86006-3235-94
PIN # 124631.00

SHEET INTENTIONALLY
LEFT BLANK

SEALED BY

11/19/2021

BARGE
DESIGN SOLUTIONS
520 West Summit Hill Drive // Suite 1202 // Knoxville, Tennessee 37902
PHONE (865) 637-2810 // FAX (865) 673-8554
BARGE PROJECT NO. 36427-08

JOHNSON CITY
TENNESSEE

BLANK

11/19/2021
F:\36\36427\3642708\04_CAD\WATR\PLOT\3642708U5-3.SHT

TENNESSEE D.O.T.
DESIGN DIVISION
FILE NO.

CONTROL POINTS TABLE						
POINT	NORTH	EAST	ELEVATION	DESCRIPTION	STATION	OFFSET
S12	697286.583	3045814.649	1926.164	86-107-12	207+70.25	17.0341
S13	698083.956	3045757.753	1930.878	86-107-13	215+66.53	26.1259

TYPE	YEAR	PROJECT NO.	SHEET NO.
CONST.	2022	BR-STP-107(28)	U5-4

SR-107 UNICOI
86006-3235-94
PIN # 124631.00

N

86006-2235-94
BEGIN PROJ. BR-STP-107(28)
STA. 208+00.00 (R.O.W.)
N 697318.6582
E 3045801.6275

86006-2235-94
END PROJ. BR-STP-107(28)
STA. 213+73.97 (R.O.W.)
N 697889.6859
E 3045753.1061

STA. 214+20.00 SR 107(UNICOI DR.) =
STA. 214+20.00 SR 173(ERWIN HWY) =
STA. 300+00.00 SR 107
N 697935.4301
E 3045748.0104

86006-3235-94
END PROJ. BR-STP-107(28)
STA. 216+50.00 (CONST.)
N 698164.0162
E 3045722.5472

NOTES:
1. CONTRACTOR TO RELOCATE EXISTING WATER METER TO ROW. CONNECT WATER METER TO NEW 3/4" CU SERVICE LINE.
2. CUT & PLUG TO BE COMPLETED ONCE NEW WATER MAIN IS INSTALLED, TESTED, DISINFECTED, AND APPROVED FOR SERVICE

1 U5-5 / CC U5-6 STA 1+42± TO STA 2+02± CREEK CROSSING 60LF OF OPEN CUT WITH CONCRETE ENCASEMENT

VB1 U5-6 STA 1+35± 1 - 8" MJ GV

STA 1+13± 1 - 8" MJ 11.25° BEND

STA 0+47± 1 - 8" MJ 45° BEND

STA 0+00 CONNECT TO EXISTING 4" WATER MAIN W\ 4" x 4" TS&V 1 - 8" x 4" MJ REDUCER 1 - 8" MJ 45° BEND

EXISTING 4" WATER MAIN TO REMAIN

CUT & PLUG EXISTING 4" WATER MAIN SEE NOTE 2

PROP. 10' CONST. ESMT.

PROP. R.O.W.

CLASS "C" RIP-RAP 3'-6" THICK (TYP.)

PROPOSED JWCS UTILITY EASEMENT

VB1 U5-6 STA 2+09± 1 - 8" MJ GV

STA 2+13± 1 - 8" MJ 22.5° BEND

PROPOSED 8" DIP WATER MAIN (RJP)

EXISTING 6" WATER MAIN TO BE REMOVED/RETIRED

EXISTING 6" GATE VALVE TO BE REMOVED/RETIRED (TYP 2)

STA 3+58± 1 - 8" MJ 22.5° BEND

UNICOI WATER METER. DO NOT DISTURB.

EXISTING WATER METER TO BE RELOCATED IN COORDINATION WITH JCWS (TYP 3)

NSC U5-6 STA 6+60± 2 - 8" MJ 45° BENDS

STA 7+98 EOL CONNECT TO EXISTING 4" WATER MAIN W\ 4" x 4" TS&V 2 - 4" MJ 45° BEND 1 - 8" x 4" MJ REDUCER

EXISTING 4" WATER MAIN TO REMAIN

PROP. 10' CONST. ESMT.

CUT & PLUG EXISTING 4" WATER MAIN SEE NOTE 2

S.R. 107 (UNICOI DR.) N 6° 21' 22" W

S.R. 173 (ERWIN HWY) N 63° 38' 36" E

S.R. 107 (UNICOI DR.) N 73° 51' 40" E

WASHINGTON ST.

BEGIN GRADED SOLID ROCK PAD STA. 208+65.00 38.68 (RT)

END GRADED SOLID ROCK PAD STA. 210+16.00 27.00 (RT)

BEGIN STR-1 IMPACT STA. 210+75.69

END STR-1 IMPACT STA. 210+78.01

S.R. 107 STA. 303+00.00 N 697874.1985 E 3046038.7268

S.R. 173 (ERWIN HWY) STA. 217+00.00 N 698213.7089 E 3045717.0117

S.R. 107 STA. 282+00.00 N 697465.4465 E 3045714.8917

S.R. 107 STA. 312+75.00 N 698262.6349 E 3045990.0524

GARNIE PETERSON (5)
FRED D. LYLE, IV (13) 215
M. D. COLLINS EX. S.R. 107 STA. 309+30.42 = EX. LIMESTONE COVE RD. STA. 10+00.00 N 697960.5958 E 3045745.3516
CARL W. JONES AND WIFE, JUDY JONES (6)
GUY R. WILSON AND WIFE, DORIS WILSON (15)
LINDA PLEMONS AND HUSBAND, DON PLEMONS (7)
LINDA PLEMONS AND HUSBAND, DON PLEMONS (8)
VIRGINIA BOWMAN HUNTER HEIRS (4)
UNAKA PROFESSIONAL SERVICES, LLC (14)
TOWN OF UNICOI (10)
TOWN OF UNICOI
UNICOI WATER UTILITY DISTRICT
JOHNSON CITY WATER
NORTH INDIAN CREEK
DRILL HOLE

SEALED BY

KRISTOPHER C. HATCHELL XVI REGISTERED ENGINEER AGRICULTURE COMMERCE No. 109543 STATE OF TENNESSEE

11/19/2021

BARGE DESIGN SOLUTIONS
520 West Summit Hill Drive // Suite 1202 // Knoxville, Tennessee 37902
PHONE (865) 637-2810 // FAX (865) 673-8554
BARGE PROJECT NO. 36427-08

JOHNSON CITY TENNESSEE

UTILITY RELOCATION WATER
STA.0+00 TO STA.7+98

SCALE: 1"= 50'

11/19/2021
F:\36\36427\36427-08\04.CAD\WATR\PLOT\36427-08U5-4.SHT

TENNESSEE D.O.T.
DESIGN DIVISION
FILE NO.

TYPE	YEAR	PROJECT NO.	SHEET NO.
CONST.	2022	BR-STP-107(28)	U5-5

SR-107 UNICOI
86006-3235-94
PIN # 124631.00

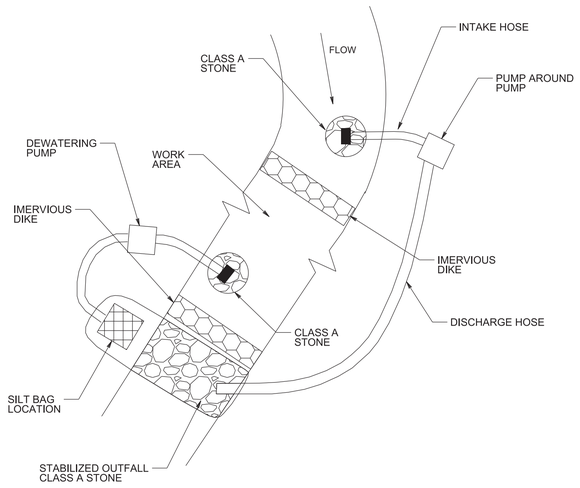

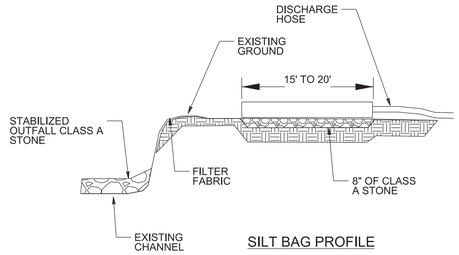

SILT BAG PROFILE

NOTES:

1. EXCAVATION SHALL BE PERFORMED ONLY IN DRY AND/OR ISOLATED SECTIONS OF CHANNEL.
2. IMPERVIOUS DIKES SHOULD BE USED TO ISOLATE WORK AREAS FROM STREAM FLOW.
3. THE CONTRACTOR SHALL NOT DISTURB MORE AREA THAN CAN BE STABILIZED IN ONE WORKING DAY. A MAXIMUM OF 200 FEET MAY BE DISTURBED AT ANY ONE TIME.
4. THE CONTRACTOR SHALL BE RESPONSIBLE FOR DETERMINING PUMP SIZE SUFFICIENT TO PUMP BASE FLOW.
5. DIKE MUST BE CONSTRUCTED OF NON-ERODIBLE MAERIALS SUCH AS SANDBAGS.
6. USE SILT BAG PROFILE ABOVE ONLY FOR STREAM DE-WATERING.

SEQUENCE OF CONSTRUCTION:

1. INSTALL STILLING BASIN AND STABLIZED OUTFALL USING CLASS A RIP RAP AT THE DOWNSTREAM END OF THE DESIGNED PROJECT WORKING AREA.
2. THE CONTRACTOR SHALL INSTALL THE PUMP AROUND PUMP AND THE TEMPORARY PIPING THAT WILL CONVEY THE BASE FLOW FROM UPSTREAM OF THE WORK AREA TO THE STABILIZED OUTFALL.
3. INSTALL UPSTREAM IMPERVIOUS DIKE AND BEGIN PUMPING OPERATIONS FOR STREAM DIVERSION.
4. INSTALL THE DOWNSTREAM IMPERVIOUS DIKE AND DEWATERING PUMP APPARATUS IF NEEDED TO DEWATER THE ENTRAPPED AREA. THE PUMP AND HOSE FOR THIS PURPOSE SHALL BE OF SUFFIECIENT SIZE TO DEWATER THE WORK AREA. THIS WATER WILL ALSO BE PUMPED TO AN OUTFALL STABILIZED WITH CLASS A RIP RAP.
5. THE CONTRACTOR SHALL EXCAVATE ANY ACCUMULATED SILT AND DEWATER BEFORE REMOVAL OF THE IMPERVIOUS DIKE. WHEN DEWATERING AREA, ALL DIRTY WATER MUST BE PUMPED THROUGH A SILT BAG, REMOVE IMPERVIOUS DIKES, PUMPS, AND TEMPORARY FLEXIBLE HOSE/PIPING STARTING WITH THE DOWNSTREAM DIKE FIRST.
6. ONCE THE WORKING AREA IS COMPLETED, REMOVE ALL RIP RAP AND IMPERVIOUS DIKES AND STABILIZE DISTURBED AREAS WITH SEED AND MULCH.
7. ALL WORK IN CHANNEL MUST BE COMPLETED BEFORE REMOVING IMPERVIOUS DIKE.

1 U5-5 PUMP AROUND AND DEWATERING
NTS

HORIZONTAL BENDS AND VERTICAL BENDS UP

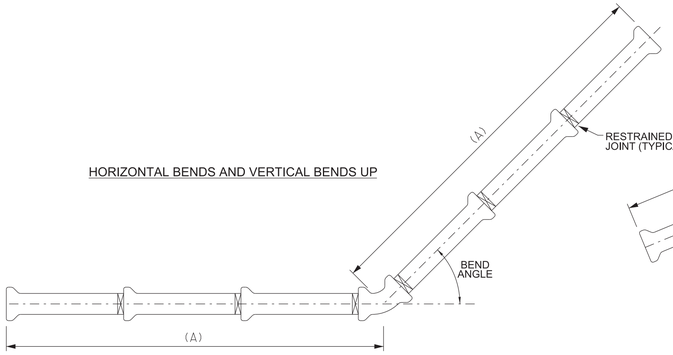

VERTICAL BENDS DOWN

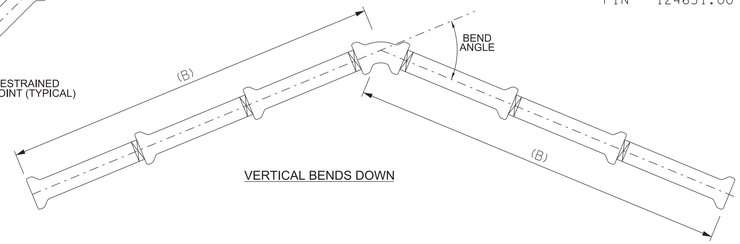

TABLE OF LENGTHS REQUIRING JOINT RESTRAINT FOR DUCTILE IRON PIPE

NOMINAL PIPE DIAMETER (INCHES)	PRESSURE CLASS	(A) HORIZONTAL BENDS AND VERTICAL-UP BENDS AS FUNCTION OF BEND ANGLE				(B) VERTICAL-DOWN BENDS AS FUNCTION OF BEND ANGLE			(C) HORIZONTAL TEE BASED ON BRANCH SIZE	(D) DEAD ENDS *	REDUCERS		
		11.25°	22.5°	45°	90°	11.25°	22.5°	45°			LARGER PIPE SIZE, IN	SMALLER PIPE SIZE, IN	(E) RESTRAINED LENGTH, FT
		RESTRAINED LENGTH, FT.	RESTRAINED LENGTH, FT.	RESTRAINED LENGTH, FT.	RESTRAINED LENGTH, FT.	RESTRAINED LENGTH, FT.	RESTRAINED LENGTH, FT.	RESTRAINED LENGTH, FT.	RESTRAINED LENGTH, FT.	RESTRAINED LENGTH, FT.			
6	350	3	6	12	29	6	12	24	44	44	6	4	23
8	350	4	8	16	38	8	16	32	58	58	8	6	25
12	350	6	11	23	54	11	22	45	83	83	12	8	44

BASED ON "THRUST RESTRAINT DESIGN FOR DUCTILE IRON PIPE", 6TH EDITION, 2006, DIPRA
* ALL VALVES SHALL BE RESTRAINED AS A DEAD END BOTH SIDES OF THE VALVE

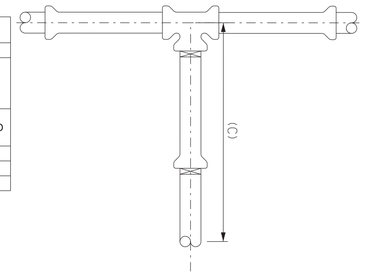

HORIZONTAL TEES

NOTES:

1. ALL PIPE JOINTS THAT FALL WITHIN THE RESTRAINED LENGTHS SHOWN FOR THE VARIOUS CONFIGURATIONS SHALL BE RESTRAINED JOINTS. JOINT RESTRAINING GASKETS ARE ACCEPTABLE; MECHANICAL JOINTS SHALL HAVE RETAINER GLANDS.
2. THE RESTRAINED LENGTHS SHOWN ARE BASED ON THE FOLLOWING CONDITIONS. IF FIELD CONDITIONS VARY FROM THESE CONDITIONS, CONSULT WITH THE DESIGN ENGINEER OR THE OWNER'S FIELD REPRESENTATIVE.
3. RESTRAINED JOINT PIPE FALLING WITHIN STEEL CASING SHALL BE DEDUCTED FROM THE INSTALLED RESTRAINED JOINT PIPE LENGTH USED TO MEET THE REQUIRED LENGTH ABOVE.

SOIL TYPE:	SILTY CLAY
LAYING CONDITIONS:	2
DEPTH OF COVER:	3 FEET MINIMUM
TEST PRESSURE:	200 PSI
SAFETY FACTOR:	2.0
POLYETHYLENE ENCASEMENT	NO

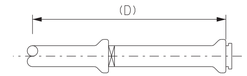

DEAD ENDS *

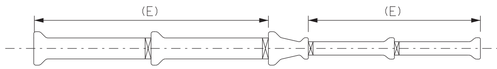

REDUCERS

STANDARD ANSI/AWWA C150/A21.50 LAYING CONDITIONS FOR DUCTILE IRON PIPE

TYPE	DESCRIPTION
2	FLAT-BOTTOM TRENCH. BACKFILL LIGHTLY CONSOLIDATED TO CENTER LINE OF PIPE.
3	PIPE BEDDED IN 4-IN MIN. LOOSE SOIL. BACKFILL LIGHTLY CONSOLIDATED TO TOP OF PIPE
4	PIPE BEDDED IN SAND, GRAVEL, OR CRUSHED STONE TO DEPTH OF 1/8 PIPE DIA., 4-IN MIN.
5	BACKFILL COMPACTED TO TOP OF PIPE. (~80% STANDARD PROCTOR.) PIPE BEDDED TO ITS CENTERLINE IN COMPACTED GRANULAR MATERIAL, 4-IN MIN. UNDER PIPE. COMPACTED GRANULAR OF SELECT MATERIAL TO TOP OF PIPE. (~90% STANDARD PROCTOR.)

2 U5-5 RESTRAINED JOINT DETAIL
NTS

SEALED BY

BARGE DESIGN SOLUTIONS
520 West Summit Hill Drive // Suite 1202 // Knoxville, Tennessee 37902
PHONE (865) 637-2810 // FAX (865) 673-8654
BARGE PROJECT NO. 36427-08

JOHNSON CITY
TENNESSEE

WATER DETAILS

NOT TO SCALE

11/19/2021
F:\36\36427\3642708\04_CAD\WATR\PLOT\3642708U5-5.SHT

TENNESSEE D.O.T.
DESIGN DIVISION
FILE NO.

TYPE	YEAR	PROJECT NO.	SHEET NO.
CONST.	2022	BR-STP-107(28)	U5-6

SR-107 UNICOI
86006-3235-94
PIN # 124631.00

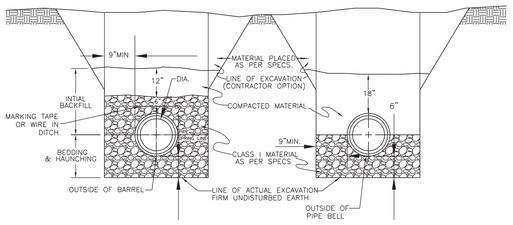

— PVC PIPE BEDDING DETAIL — — DUCTILE IRON PIPE BEDDING —

BEDDING AS SHOWN FOR DUCTILE IRON PIPE SHALL ONLY BE REQUIRED WHEN UNSUITABLE SOIL OR SOLID ROCK IS ENCOUNTERED AT THE TRENCH BOTTOM. STONE BEDDING AND/OR BACKFILL SHALL BE INCLUDED WITH THE PIPE. THE MISCELLANEOUS STONE PAY ITEM SHALL ONLY BE APPLIED TO AREAS AGREED UPON BY THE ENGINEER & CONTRACTOR.

WATER & SEWER PIPE BEDDING DETAILS — DWG NO. PBD

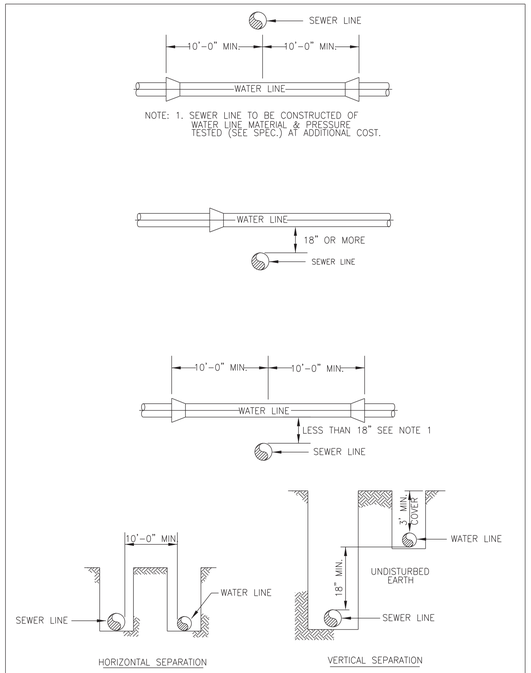

WATER & SEWER SEPARATION — DWG NO. WSS1

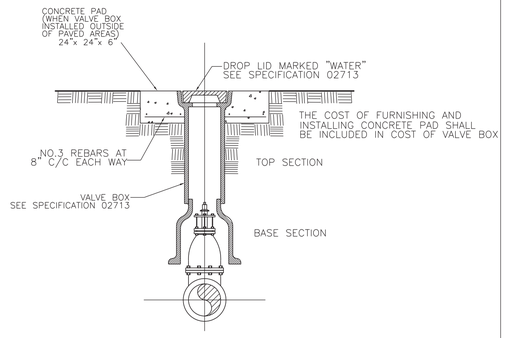

VALVE BOX (TWO PIECE) — DWG NO. VB1

NOTE:

1. ALL DETAILS SHOWN ON THIS SHEET HAVE BEEN PROVIDED BY THE CITY OF JOHNSON CITY. DETAILS SHALL MEET ALL OTHER REQUIREMENTS IN THE CITY OF JOHNSON CITY STANDARD SPECIFICATIONS FOR WATERLINE CONSTRUCTION.

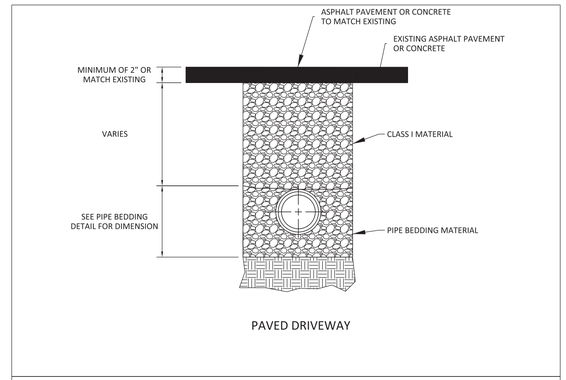

PAVED DRIVEWAY

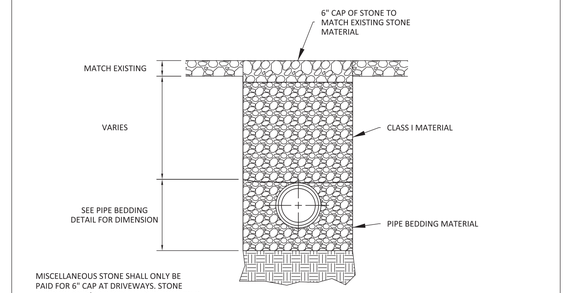

GRAVEL DRIVEWAY

DRIVEWAY CROSSING DETAIL — DWG NO. DC

NOTE:

1. REFERENCE DETAIL 3, SHEET U5-5 FOR REQUIREMENTS ASSOICATED WITH PUMP AROUND AND DEWATERING OF WORK AREA PRIOR TO AND DURING INSTALLATION OF WATER MAIN UNDER CREEK.

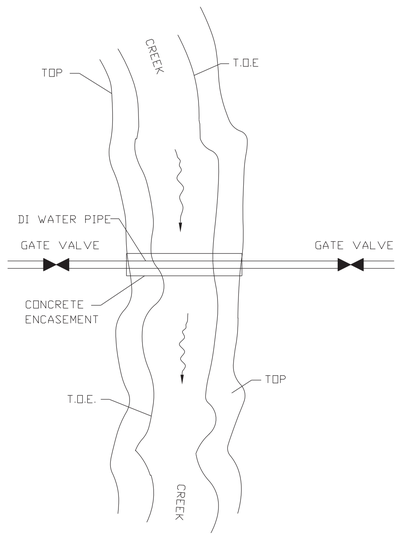

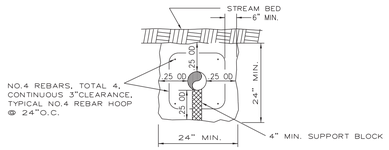

NOTES:

1. PROVIDE GATE VALVE & BOX SAME SIZE AS MAIN ON BOTH ENDS OF STREAM CROSSING AS DIRECTED BY ENGINEER.
2. PROVIDE 1/2" SAMPLE TAP AND VALVE BOX, BOTH ENDS OF CROSSING, AS DIRECTED BY ENGINEER

SECTION

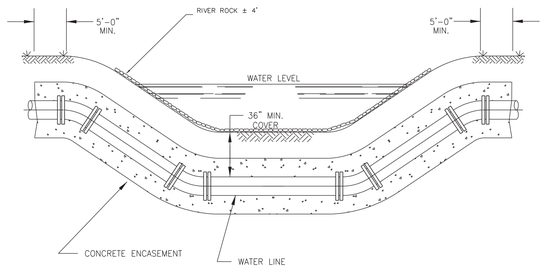

CREEK CROSSING — DWG NO. CC

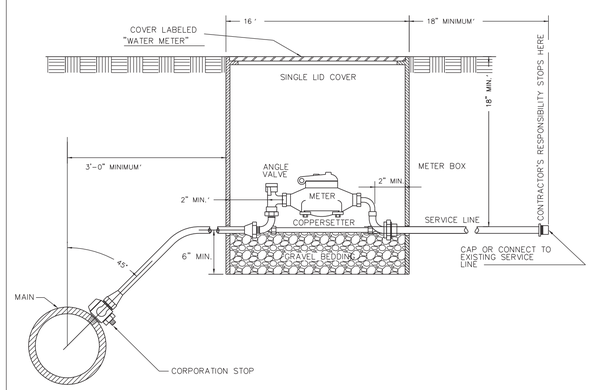

NEW SERVICE CONNECTION TO BE INSTALLED ONLY AS DIRECTED BY THE PROJECT ENGINEER.

NEW SERVICE CONNECTION — DWG NO. NSC

SEALED BY

11/19/2021

BARGE DESIGN SOLUTIONS
520 West Summit Hill Drive // Suite 1202 // Knoxville, Tennessee 37902
PHONE (865) 637-2810 // FAX (865) 673-8554
BARGE PROJECT NO. 36427-08

JOHNSON CITY
TENNESSEE

WATER DETAILS

NOT TO SCALE

11/19/2021
F:\36\36427\3642708\04_CAD\WATR\PLOT\3642708U5-6.SHT

TENNESSEE D.O.T.
DESIGN DIVISION
FILE NO.

TYPE	YEAR	PROJECT NO.	SHEET NO.
CONST.	2022	BR-STP-107(28)	U5-7

SR-107
86006-3235-94
PIN # 124631.00

UNICOI

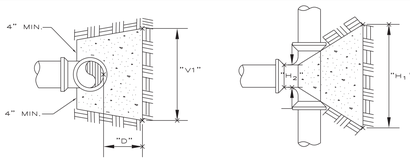

DETAIL OF HORIZONTAL & VERTICAL TEE
SEE TABLE BELOW FOR DIMENSIONS

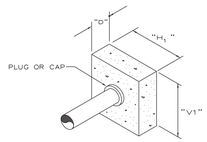

DETAIL DEAD END

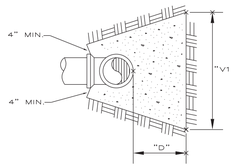

DETAIL OF HORIZONTAL BENDS
SEE TABLE BELOW FOR DIMENSIONS

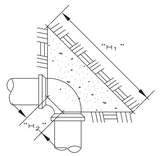

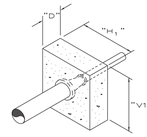

DETAIL AT REDUCER

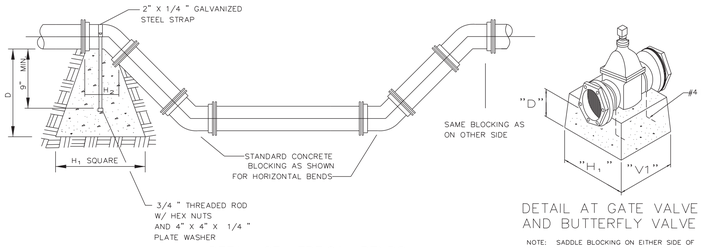

DETAIL OF VERTICAL BENDS

DETAIL AT GATE VALVE AND BUTTERFLY VALVE

NOTE: SADDLE BLOCKING ON EITHER SIDE OF THE VALVE MAY BE USED AS AN ALTERNATE.

MECHANICAL THRUST RESTRAINT TASLE

Horizontal Bends			Vertical Bends				Tees				Reducers			Dead Ends	
Size (in.)	Angle (°)	Min. Restrained Length (ft)	Size (in.)	Angle (°)	Min. Lower Restrained Length (ft)	Min. Upper Restrained Length (ft)	Size Main (in.)	Size Branch (in.)	Total length Between First Joint and Tee (ft)	Min. Restrained Length (ft)	Large End (in.)	Small End (in)	Min. retrained length for large End (ft)	Size (in.)	Min. Restrained Length for Large End (ft)
2	11.25	3	2	11.25	3	3	8	2	}	15	6	2	36	2	15
2	22.5	5	2	22.5	6	5	8	4	}	29	6	4	22	4	29
2	45	10	2	45	13	10	8	8	}	54	8	2	51	6	42
2	90	23	4	11.25	6	5	12	6	}	41	8	4	40	8	55
4	11.25	5	4	22.5	12	9	12	8	}	54	8	6	23	10	67
4	22.5	9	4	45	24	18	12	12	}	79	16	12	45	12	80
4	45	18	6	11.25	9	6	16	8	}	54	24	16	85	16	105
4	90	43	6	22.5	17	13	16	10	}	67					
6	11.25	6	6	45	35	26	16	12	}	79					
6	22.5	13	8	11.25	11	8	16	16	}	104					
6	45	26	8	22.5	22	16									
6	90	61	8	45	45	33									
8	11.25	8	12	11.25	16	12									
8	22.5	16	12	22.5	32	23									
8	45	33	12	45	66	48									
8	90	80	12	90	159	116									
10	11.25	10	16	11.25	21	15									
10	22.5	20	16	22.5	42	31									
10	45	41	16	45	87	63									
10	90	98	16	90	209	152									
12	11.25	12													
12	22.5	23													
12	45	48													
12	90	116													
16	11.25	15													
16	22.5	31													
16	45	63													
16	90	152													

NOTE:
These tables follow the design methodogy from the *DIPRA Thrust Restraint Design For Ductile Iron Pipe (Fifth Edition)* with the following design criteria:

1. Pressure = 200 psi
2. Safety Factor = 1.5
3. Cover = 2.5 ft.
4. Clay 1 Soil Type
5. Type 2 Laying Condition

These values are the most conservative. If different criteria are used, Consult City of Johnson City Water & Sewer Engineering

CONCRETE THRUST BLOCK TABLE

Horizontal Bends

Size (in.)	Angle (°)	H1 (in)	V1 (in)	H2 (in)	D (in)	Conc Vol (cy)
2	11.25	6	4	4	18	0.1
	22.5	9	5	4	18	0.1
	45	11	8	4	18	0.1
	90	15	10	4	18	0.1
4	11.25	11	7	8	18	0.1
	22.5	16	10	8	18	0.1
	45	22	14	8	18	0.1
	90	28	20	8	18	0.2
6	11.25	16	10	12	18	0.1
	22.5	22	15	12	18	0.1
	45	29	22	12	18	0.2
	90	41	28	12	18	0.3
8	11.25	20	14	16	18	0.1
	22.5	28	20	16	18	0.2
	45	38	28	16	18	0.4
	90	52	38	16	18	0.6
10	11.25	25	17	20	18	0.2
	22.5	34	24	20	18	0.3
	45	48	34	20	18	0.6
	90	65	46	20	18	0.9
12	11.25	29	20	24	24	0.3
	22.5	42	28	24	24	0.6
	45	57	40	24	24	1.0
	90	75	56	24	24	1.6
16	11.25	39	26	32	24	0.6
	22.5	53	38	32	24	1.2
	45	76	52	32	24	1.9
	90	104	70	32	24	3.1

Vertical Bends

Size (in.)	Angle (°)	H1 (in)	V1 (in)	H2 (in)	D (in)	Conc Vol (cy)
2	11.25	7	6	4	18	0.1
	22.5	10	9	4	18	0.1
	45	13	12	4	18	0.1
4	11.25	13	12	8	18	0.1
	22.5	18	17	8	18	0.1
	45	24	24	8	18	0.2
6	11.25	18	18	12	18	0.2
	22.5	25	25	12	18	0.2
	45	34	34	12	18	0.4
8	11.25	24	23	16	18	0.3
	22.5	33	33	16	18	0.4
	45	45	44	16	18	0.6
12	11.25	35	33	24	24	0.7
	22.5	48	48	24	24	1.1
	45	67	63	24	24	1.7
	90	78	76	24	24	2.3
16	11.25	45	45	32	24	1.5
	22.5	64	62	32	24	2.2
	45	88	83	32	24	3.3
	90	103	100	32	24	4.4

Dead Ends - Plugs

Size (in.)	H1 (in)	V1 (in)	H2 (in)	D (in)	Conc Vol (cy)
2	12	9	12	18	0.1
4	23	17	23	18	0.2
6	34	24	34	18	0.4
8	44	32	44	18	0.6
10	53	40	53	20	1.0
12	65	46	65	24	1.6
16	86	60	86	32	3.6

Dead Man

Size (in.)	H1 (in)	V1 (in)	H2 (in)	D (in)	Conc Vol (cy)
2	13	9	13	18	0.1
4	25	17	25	18	0.2
6	36	24	36	18	0.4
8	46	32	46	18	0.6
10	55	40	55	20	1.0
12	65	48	65	24	1.6
16	90	60	90	32	3.6

Reducers

Large End (in.)	Small End (in)	H1 (in)	V1 (in)	H2 (in)	D (in)	Conc Vol (cy)
6	2	32	22	32	18	0.3
6	4	24	18	24	18	0.2
8	2	43	30	43	18	0.5
8	4	39	26	39	18	0.4
8	6	30	20	30	18	0.3
16	12	55	40	55	32	1.6
24	16	95	65	95	48	6.4

Closed Valve

Size (in.)	H1 (in)	V1 (in)	H2 (in)	D (in)	Conc Vol (cy)
2	12	9	12	18	0.1
4	23	17	23	18	0.2
6	34	24	34	18	0.4
8	44	32	44	18	0.6
10	56	38	56	20	1.0
12	65	46	65	24	1.6
14	74	54	74	28	2.4
16	83	62	83	32	3.6

Tees

Size Main (in.)	Size Branch (in.)	H1 (in)	V1 (in)	H2 (in)	D (in)	Conc Vol (cy)
8	2	12	9	4	18	0.1
8	4	25	16	8	18	0.1
8	8	45	31	16	18	0.4
12	6	34	24	12	18	0.3
12	8	44	32	16	18	0.4
12	12	65	46	24	24	1.2
16	8	44	32	16	18	0.4
16	10	56	38	20	18	0.7
16	12	65	46	24	24	1.2
16	16	86	60	32	24	2.3

NOTE:
These tables follow the design methodogy from the *DIPRA Thrust Restraint Design For Ductile Iron Pipe (Fifth Edition)* with the following design criteria:

1. Pressure = 200 psi
2. Safety Factor = 1.5
3. Pressure 2 for Closed Valve = 0 psi
4. Soil Bearing Capacity = 2000 psf

These values are conservative. If different criteria are used, Consult City of Johnson City Water & Sewer Engineering

SEE TABLES FOR DIMENSIONS

THRUST BLOCKS & DATA

DWG NO.
TB1

SEALED BY

KRISTOPHER C. HATCHELL
REGISTERED ENGINEER
AGRICULTURE
COMMERCE
No. 109442
STATE OF TENNESSEE

11/19/2021

BARGE DESIGN SOLUTIONS
520 West Summit Hill Drive // Suite 1202 // Knoxville, Tennessee 37902
PHONE (865) 637-2810 // FAX (865) 673-8554

BARGE PROJECT NO. 36427-08

JOHNSON CITY
TENNESSEE

WATER DETAILS

NOT TO SCALE

11/19/2021
F:\36\36427\364270B\04_CAD\WATR\PLOT\364270BU5-7.SHT

TYPE	YEAR	PROJECT NO.	SHEET NO.
CONST	2022	BR-STP-107(28)	U6-1

STANDARD UTILITY NOTES:

1. EXCEPT FOR EROSION SEDIMENT CONTROL ITEMS, NO ROADWAY OR BRIDGE ITEMS SHALL BE UTILIZED TO COMPENSATE FOR WORK METHODS OR MATERIALS ASSOCIATED WITH AND/OR SPECIFIED FOR THE UTILITY INSTALLATION, EVEN THOUGH THE SAME OR SIMILAR ROADWAY OR BRIDGE MATERIALS MAY HAVE BEEN CALLED FOR IN THE UTILITY SPECIFICATIONS OR DRAWINGS.
2. ALL MATERIALS, METHODS, AND/OR INTEGRAL MATERIALS OUTLINED IN THE UTILITY SPECIFICATIONS OR DRAWINGS NECESSARY TO PROVIDE A COMPLETE AND FUNCTIONAL INSTALLATION MUST BE INCLUDED IN THE UNIT PRICE FOR THE ASSOCIATED UTILITY WORK ITEM.
3. THE CONTRACTOR MUST MAINTAIN ALL SERVICES DURING THE CONSTRUCTION OF THE RELOCATED FACILITY. ANY COSTS ASSOCIATED WITH INSTALLATION OF REQUIRED TEMPORARY SERVICE LINES DUE TO THE ROADWAY CONSTRUCTION SEQUENCE OF WORK (I.E., CUTS, FILLS, PHASING, ETC.) SHALL BE INCLUDED IN THE COST OF THE PERMANENT UTILITY ITEMS. (NOTE TO UTILITY: THE UTILITY RELOCATION PLANS SHALL PROVIDE TO THE CONTRACTOR THE UTILITY'S REQUIREMENTS FOR TEMPORARY TIE-INS (INCLUDING NECESSARY TESTING AND STERILIZATION TO ACCOMPLISH THE TIE-IN) AND ALSO ANY RESTRICTIONS FOR TAKING LINES OUT OF SERVICE. IF A TEMPORARY LINE WILL BE A MAJOR ITEM OF WORK, A SPECIFIC TEMPORIZATION PLAN AND ITEM MUST BE INCLUDED IN THE UTILITY'S PLANS.)
4. IT SHALL BE THE RESPONSIBILITY OF THE PRIME CONTRACTOR'S SURVEYOR TO LAY OUT ALL THE FACILITIES BEING RELOCATED WITHIN THE CONTRACT.
5. FOR BURIED UTILITIES, THE PRIME CONTRACTOR OR SUBCONTRACTOR SHALL BE REQUIRED TO PROVIDE TO THE UTILITY UPON COMPLETION OF THE UTILITY'S RELOCATION WORK A SET OF AS-BUILT DRAWINGS FOR THEIR RECORDS. THESE AS-BUILT DRAWINGS SHOULD BE PREPARED AS THE JOB PROGRESSES TO ENSURE THEIR ACCURACY.
6. WHERE EROSION CONTROL MEASURES ARE NEEDED FOR THE UTILITY RELOCATION WORK OCCURRING INSIDE OR OUTSIDE STATE RIGHT-OF-WAY, THE CONTRACTOR SHALL SUBMIT TO THE TDOT PROJECT SUPERVISOR FOR APPROVAL A PROPOSED EROSION AND SEDIMENT CONTROL PLAN PRIOR TO BEGINNING THE WORK. TDOT APPROVAL MUST BE RECEIVED BEFORE THE EROSION CONTROL PAY ITEMS FOR ROADWAY CONSTRUCTION CAN BE USED FOR ANY ADDITIONAL EROSION CONTROL MEASURES REQUIRED FOR THE UTILITY RELOCATION WORK.
7. DRIVEWAY, SIDEWALK AND ROADWAY TEMPORARY RESTORATION SHALL BE PART OF THE IN-PLACE COST OF PLACING THE UTILITY ITEM WITHIN THE ROW.
8. ANY EXCAVATION OF THE STREAM CHANNEL AREA SHALL BE SEPARATED FROM FLOWING WATER AND ACCOMPLISHED DURING LOW FLOW CONDITIONS. THIS SHALL BE ACCOMPLISHED BY THE USE OF FLUMES, LINED DIVERSION CHANNEL WITH SANDBAG BERM, DIVERSION PIPE WITH SANDBAG DAM AT PIPE INLET, OR IN SOME CASES COFFERDAMS. ALTERNATIVELY, BASED ON FIELD CONDITIONS AND CONTRACTOR SELECTION, THE UTILITY RELOCATION MAY BE ACCOMPLISHED USING BORE TECHNOLOGY WITH NO STREAM CHANNEL IMPACTS.

GENERAL NOTES:

1. THE CONTRACTOR MUST GIVE ADEQUATE NOTICE TO ALL UTILITY OWNERS PRIOR TO EXCAVATION. THE CONTRACTOR SHALL NOTIFY EACH INDIVIDUAL UTILITY OWNER OF HIS PLAN OF OPERATION IN THE AREA OF THE UTILITIES. PRIOR TO COMMENCING WORK, THE CONTRACTOR SHALL CONTACT THE UTILITY OWNERS AND REQUEST THEM TO PROPERLY LOCATE THEIR RESPECTIVE UTILITY ON THE GROUND. THE CONTRACTOR SHALL NOTIFY TENNESSEE ONE CALL SERVICE AT LEAST 3 WORKING DAYS PRIOR TO EXCAVATING. THE TENNESSEE ONE CALL SERVICE CAN BE CONTACTED BY CALLING 811 OR 1-800-351-1111.
2. THE CONTRACTOR SHALL MAINTAIN A LIST OF EMERGENCY CONTACTS WITH EACH AFFECTED UTILITY FOR CASES OF ACCIDENTAL UTILITY DAMAGE.
3. THE CONTRACTOR SHALL PROVIDE SUPPORT AND PROTECTION OF EXISTING UTILITIES EXPOSED DURING EXCAVATION AS NEEDED TO MAINTAIN SERVICE AND THE INTEGRITY OF THE UTILITY.
4. IF AN EXISTING UTILITY IS DAMAGED DURING CONSTRUCTION, THE CONTRACTOR SHALL IMMEDIATELY NOTIFY THE UTILITY INSPECTOR AND THE UTILLTIY OWNER. REPAIRS TO THE DAMAGED UTILITY SHALL BE AT THE EXPENSIE OF THE CONTRACTOR.
5. SOME UTILITY FACILITIES MAY NEED TO BE ADJUSTED CONCURRENTLY WITH THE CONTRACTOR'S OPERATIONS, WHILE SOME WORK MAY BE REQUIRED AROUND UTILITY FACILITIES THAT WILL REMAIN IN PLACE. IT IS UNDERSTOOD AND AGREED THAT THE CONTRACTOR WILL RECEIVE NO ADDITIONAL COMPENSATION FOR ANY DELAYS OR INCONVENIENCE CAUSED BY THE UTILITY ADJUSTMENTS.
6. ALL GAS MAIN CONSTRUCTION SHALL BE PERFORMED IN ACCRODANCE WITH UNICOI COUNTY GAS UTILITY DISTRICT (UCGUD) STANDARDS AND SPECIFICAITONS, LATEST EDITIONS, AND THE TENNESSEE DEPARTMENT OF TRANSPORATION (TDOT) STANDARD SPECIFICATIONS FOR ROAD AND BRIDGE CONSTRUCTION, LATEST EDITION, AS APPLICABLE.
7. GAS SERVICE SHALL BE MAINTIANED DURING RELOCATION OF BOTH THE MAINS. SHOULD ANY SERVICE DISRUPTION BECOME NECESSARY THE CONTRACTOR SHALL COORDINATE WITH MARK LAFEVER AT UNICOI COUNTY GAS UTILITY DISTRICT 423-330-7455 AT LEAST 3 DAYS (72 HOURS) IN ADVANCE REGARDING THE DURATION OF THE INTERRUPTION AND THE PROPER RESTORATION OF SERVICE.
8. ALL DEMOLITION WASTE AND CONSTRUCTION DEBRIS SHALL BE REMOVED BY THE CONTRACTOR AND DISPOSED OF IN ACCORDANCE WITH LOCAL AND STATE REQUIREMENTS.
9. THE CONTRACTOR SHALL BE RESPONSIBLE FOR EXAMINING THE AREAS AND CONDITIONS UNDER WHICH THE PROJECT IS TO BE CONSTRUCTED AND NOTIFY THE ENGINEER OF CONDITIONS DETRIMENTAL TO THE PROPER AND TIMELY COMPLETION OF THE WORK.
10. THE CONTRACTOR SHALL IDENTIFY REQUIRED LINES, LEVELS, AND DATUM PRIOR TO CONSTRUCTION.
11. IT SHALL BE THE RESPONSIBILITY OF THE CONTRACTOR TO LAYOUT ALL THE FACILITIES BEING CONSTRUCTED, RELOCATED, AND/OR ADJUSTED WITHIN THE CONTRACT.
12. NOTHING IN THE GENERAL NOTES SHALL RELIEVE THE CONTRACTOR FROM THE RESPONSIBILITY OF MAINTAINING THE SAFETY AND CONVENIENCE OF THE GENERAL PUBLIC AND THE BUSINESSES ALONG THE PROPOSED CONSTRUCTION AREA.
13. ALL TRENCHING, PIPE-LAYING, AND BACKFILLING SHALL BE IN ACCORDANCE WITH FEDERAL OSHA REGULATIONS.
14. THE CONTRACTOR SHALL PLACE A MINIMUM OF 4-INCHES OF TOPSOIL ON ALL DISTURBED AREAS EXCEPT THOSE THAT ARE SCHEDULED FOR PAVEMENT, RIP-RAP, CONCRETE, AND/OR OTHER HARDSCAPES. THE CONTRACTOR SHALL ALSO APPLY SEED, FERTILIZER, MULCH, AND WATER AS NECESSARY UNTIL AN ADEQUATE STAND OF VEGETATION IS ESTABLISHED. EXISTING FEATURES, INCLUDING BUT NOT LIMITED TO, CURBING, FENCING, SIDEWALKS, APRONS, PAVEMENT MARKINGS, MAIL BOXES, DRIVEWAYS, AND OTHER INCIDENTAL ITEMS DISTURBED DURING CONSTRUCTION SHALL BE RESTORED IN-KIND TO AT LEAST THE ORIGINAL CONDITIONS OR REPAIRED IN ACCORDANCE WITH THE PROJECT SPECIFICATIONS.

SPECIAL NOTES:

1. STORM, SURFACE, NUISANCE, OR OTHER WATERS MAY BE ENCOUNTERED AT VARIOUS TIMES DURING CONSTRUCTION OF THE PROJECT. THE CONTRACTOR SHALL ASSUME ANY AND ALL RISKS AND LIABILITIES ARISING THEREFROM.
2. ALL MATERIALS, METHODS, AND/OR INTEGRAL MATERIALS OUTLINED IN THE UTILITY SPECIFICATIONS OR DRAWINGS NECESSARY TO PROVIDE A COMPLETE AND FUNCTIONAL INSTALLATION MUST BE INCLUDED IN THE UNIT PRICE FOR THE ASSOCIATED UTILITY WORK ITEM.
3. THE BIDDER IS ENCOURAGED TO CHECK QUANTITIES PRIOR TO SUBMITTING BID. ANY DISCREPANCIES FOUND BY THE CONTRACTOR SHOULD BE BROUGHT TO THE ATTENTION OF THE ENGINEER AS SOON AS POSSIBLE AND IN ALL CASES PRIOR TO THE OPENING OF BIDS.
4. THE CONTRACTOR SHALL BE RESPONSIBLE FOR MEETING ALL CONDITIONS SPECIFIED IN THE PERMITS FOR THIS PROJECT. ANY FINES ISSUED FOR NON-COMPLIANCE WITH THE PERMIT CONDITIONS SHALL BE PAID BY THE CONTRACTOR.
5. MEANS AND METHODS OF CONSTRUCTION ARE THE SOLE RESPONSIBILITY OF THE CONTRACTOR.
6. THE HORIZONTAL AND VERTICAL BEND FITTINGS AND DEFLECTIONS SHOWN ON THE DRAWINGS ARE NOT NECESSARILY ALL OF THE BEND FITTINGS OR DEFLECTIONS REQUIRED FOR THE INSTALLATION OF THE UTILITIES.
7. ALL UTILITY WORK SHALL BE COMPLETED WITHIN THE RIGHT-OF-WAY OR EASEMENT. IT SHALL BE THE RESPONSIBILITY OF THE CONTRACTOR'S SURVEYOR TO LAYOUT ALL THE RIGHT-OF-WAY AND EASEMENT AREAS. EASEMENT DOCUMENTS AND STATE APPROVED CONSTRUCTION PLANS SHALL BE KEPT BY THE CONTRACTOR ON THE PROJECT SITE AT ALL TIMES.
8. NEW GAS MAINS SHALL BE TESTED IN ACCORDANCE WITH THE SPECIFICATIONS PRIOR TO BEING PLACED INTO SERVICE AND REMOVAL OF THE OLD MAIN FROM SERVICE.
9. THE CONTRACTOR SHALL SAWCUT ASPHALT, CONCRETE AND/OR CURBING NECESSARY FOR THE INSTALLATION OF THE GAS MAINS, PRIOR TO REMOVAL.
10. SILT FENCE OR APPROVED EQUIVALENT MEASURE SHALL BE INSTALLED ON THE DOWN GRADIENT SIDE OF UTILITY TRENCHES. WHERE INSTALLATION OF THE GAS MAIN IS WITHIN A PAVED AREA AND WILL NOT ALLOW FOR INSTALLATION OF SILT FENCE ADJACENT TO THE TRENCH, THE UTILITY TRENCH SHALL BE BACKFILLED WITH 6" MININUM OF CRUSHED STONE, ABOVE THE REQUIRED PROTECTIVE PADDING ABOVE THE PIPE, AT END OF EACH DAY.
11. PUMPING AND/OR REMOVAL OF STORMWATER FROM ANY UTILITY TRENCH SHALL BE DONE IN ACCORDANDE WITH TDEC AND TDOT STANDARDS.

INDEX OF SHEETS

SHEET NO.	DESCRIPTION
U6-1	NOTES, ESTIMATED QUANTITIES & DETAILS
U6-2	GAS MAIN RELOCATION PLAN
U6-1	GAS MAIN RELOCATION PROFILES

ESTIMATED QUANTITIES

	TDOT Item No.	Item Description	Qty	Footnotes
	202-03.03	REMOVAL OF ASPHALT PAVEMENT	160	
	209-99.91	EROSION CONTROL	1	
A	407-20.05	SAW CUTTING ASPHALT PAVEMENT	855	
	791-01.05	6IN STEEL GAS MAIN	531	1
	791-02.02	2IN MDPE GAS MAIN	215	1
	791-04.02	HDD 2IN PE PIPE - UNCONSOLIDATED	245	2
	791-05.21	BORE/JACK 12IN - STEEL CASING PIPE - UNCONSOLIDATED	80	
	791-06.02	CONNECT TO 2IN EX. PE MAIN	2	3
	791-06.12	CONNECT TO 6IN EX. STL MAIN	2	3
	791-06.33	CONNECT TO 6IN EX. STL MAIN W/STOPPLE	2	3
	791-06.51	2IN PE HOT TAP CONNECTION	1	3
	791-07.01	2IN PE GAS VALVE ASSEMBLY	3	4
	791-07.11	6IN STEEL GAS VALVE ASSEMBLY	2	4
	791-08.08	1IN PE SERVICE PIPE	10	5
	791-09.02	3-WIRE CATHODIC PROTECTION STATION	2	6
B	791-09.05	RESTORE ASPHALT	160	INCLUDES ALL MATERIALS, LABOR AND EQUIPMENT, SETUP AND TRAFFIC CONTROL
B	791-09.05	RESTORE ASPHALT	40	INCLUDES ALL MATERIALS, LABOR AND EQUIPMENT, SETUP AND TRAFFIC CONTROL
	791-10.04	RETIRE IN PLACE 2IN SERV CUT & PLUG	2	7
	791-10.06	RETIRE IN PLACE 6IN SERV CUT & PLUG	2	7

ESTIMATED QUANTITY NOTES:

A. ITEM 407-20.05 INCLUDES ALL SAW CUTTING OF PAVEMENT PRIOR TO REMOVAL.

B. ITEMS INCLUDE INSTALLATION OF ASPHALT IN ACCORDANCE WITH WITH THE PAVEMENT SPECIFICATIONS PROVIDED IN THE CONSTRUCTION PLANS FOR SR 107 (UNICOI DRIVE), BRIDGE OVER NORTH INDIAN CREEK.

FOOTNOTES:

1. INCLUDES ALL MATERIALS INCLUDING SAND/STONE BEDDING, FLOWABLE FILL, TEMPORARY PAVEMENT IN OR OUT OF ROW, LABOR, EQUIPMENT FOR COMPLETE INSTALLATION OF PIPE INCLUDING BUT NOT LIMITED TO TRAFFIC CONTROL, EXCAVATION INCLUDING DIRT/ROCK, BACKFILLING, CREEK CROSSINGS PER SWPPP, COUPLINGS, FITTINGS, PIPE FUSION, APPURTENANCES, MAINTAINING THE TRENCH, PURGE POINT INSTALLATION, TESTING BY UTILITY SPECIFICATIONS TO INCLUDE BUT NOT LIMITED TO AIR, NITROGEN, HYDROSTATIC OR X-RAY, DEW POINT OR DRYING, AND ANY OTHER LABOR OR MATERIAL REQUIRED TO COMPLETE THE WORK AS SPECIFIED ON THE PLANS.
2. INCLUDES ALL MATERIALS, LABOR, EQUIPMENT, AND TRAFFIC CONTROL, INCLUDING BUT NOT LIMITED TO FLUID CONTAINMENT FOR COMPLETE HORIZONTAL DIRECTIONAL DRILLING INSTALLATION OF CASING PIPE.
3. INCLUDES ALL MATERIALS, LABOR, AND EQUIPMENT, NECESSARY FOR CONNECTING TO EXISTING GAS LINE INCLUDING TRAFFIC CONTROL.
4. INCLUDES TRANSITION FITTINGS, VALVES, VALVE BOX, BOX ADJUSTMENT, VALVE BOX COLLAR, VALVE MARKER, EXCAVATION, BEDDING, BACKFILL, COUPLINGS, FUSION TEES, TAP OF EXISTING LINE, AND ALL OTHER NECESSARY MATERIALS AND LABOR FOR COMPLETE INSTALLATION OF ASSEMBLY INCLUDING TRAFFIC CONTROL.
5. INCLUDES ALL MATERIALS, PARTS, LABOR, EQUIPMENT, MACHINERY, TOOLS, OR APPARATUS NECESSARY FOR INSTALLATION OF GAS SERVICE ASSEMBLIES AS DESCRIBED IN THE PLANS AND SPECS. INSTALLATION FOR LONG SIDE AND SHORT SIDE APPLICATIONS. SERVICE PIPE SHALL BE PAID PER LINEAR FOOT INSTALLED.
6. INCLUDES ALL MATERIALS, LABOR, AND EQUIPMENT FOR COMPLETE INSTALLATION OF INDIVIDUAL ITEM AS SPECIFIED ON BID FORM AND UTILITY SPECIFICATIONS.
7. INCLUDES ALL MATERIALS, LABOR, AND EQUIPMENT FOR RETIREMENT OF ITEM INCLUDING STABILIZING THE ITEM OF PLANT PER UTILITY SPECIFICATIONS.

UTILITY	
NAME :	UNICOI COUNTY GAS UTILITY DISTRICT
ADDRESS :	1414 N. MAIN AVENUE ERWIN, TN 37650
CONTACT :	MARK LAFEVER, OPERATIONS SUPERVISOR
PHONE :	(423) 743-6793
EMAIL :	mlafever@ucgud.com

ENGINEER	
NAME :	TYSINGER, HAMPTON & PARTNERS, INC.
ADDRESS :	7 WORTH CIRCLE JOHNSON CITY, TN 37601
CONTACT :	JONATHAN SHIPLEY, PROJECT MANAGER THOMAS O. PATTON, JR., ENGINEER
PHONE :	423-282-2687
EMAIL :	jshipley@tysinger-engineering.com

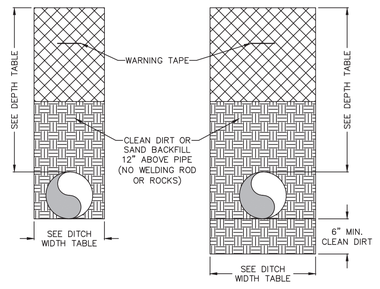

SOIL EXCAVATION ROCK EXCAVATION

DEPTH TABLE	
TYPE OF INSTALLATION	MINIMUM COVER
HDPE OR PLASTIC MAIN	*30"
STEEL MAIN 60 PSI OR UNDER	*30"
STEEL MAIN OVER 60 PSI	*36"
*MAY BE REDUCED TO 24" IN ROCK EXCAVATION. WRITTEN APPROVAL FROM UCGUD REQUIRED.	

WIDTH TABLE		
PIPE SIZE	DIRT (MIN.)	ROCK (MIN.)
2"	6"	12"
4"	8"	12"
6"	12"	18"
8"	12"	18"

STANDARD DITCH
NTS

These documents prepared by Tysinger, Hampton & Partners, Inc. (TH&P) are instruments of TH&P's service. Unless otherwise indicated, TH&P shall be deemed the author of drawings, specifications and other documents and will retain all common law, statutory and other reserved rights, in addition to the copyright. Documents prepared by TH&P are for use solely with respect to this project. These documents shall not be used, copied or retained without the specific written consent of TH&P. Any violations of the above rights of TH&P shall be prosecuted to the maximum possible extent within the law.

NOTES, ESTIMATED QUANTITIES & DETAILS

SR 107 (UNICOI DRIVE), BRIDGE OVER NORTH INDIAN CREEK

Tysinger, Hampton & Partners, Inc.
Civil Engineering Surveying Environmental Consulting
3428 BRISTOL HIGHWAY
JOHNSON CITY, TENNESSEE 37601
Phone:(423) 282-2687 Fax:(423)854-4563
Email: tlph@tysinger-engineering.com
WWW.TYSINGERENGINEERING.COM

JOB NO. : 2010100C	DRAWING BY: CRR,JES
CADD FILE : 2010100C.DWG	CHECKED BY: TOP

8/19/2021 2:18 PM - Jonathan Shipley
F:\Jobs-2020\2010100C - UCGUD Gas Main Relocation 107\Drawings\2010100C_UC107-03_UCGUD Relocation Plan.dwg - 2.93Mb
U6-1 Notes

TYPE	YEAR	PROJECT NO.	SHEET NO.
CONST	2022	BR-STP-107(28)	U6-2

86006-3235-94
END PROJ. BR-STP-107(28)
STA. 216+50.00 (CONST.)
N 698164.0162
E 3045722.5472

86006-3235-94
BEGIN PROJ. BR-STP-107(28)
STA. 207+75.00 (CONST.)
N 697293.8548
E 3045798.5115

GRAPHIC SCALE
50 0 25 50 100
(IN FEET)
1 inch = 50 ft.

NOTICE
LOCATION OF ALL UTILITIES AND UNDERGROUND STRUCTURES SHOWN ARE APPROXIMATE AND THOSE SHOWN ARE NOT NECESSARILY ALL OF THE EXISTING UTILITIES AND STRUCTURES. IT IS THE CONTRACTORS RESPONSIBILITY TO DETERMINE THE EXACT LOCATION AND THE EXISTENCE OF ALL UTILITIES AND UNDERGROUND STRUCTURES.

These documents prepared by Tysinger, Hampton & Partners, Inc. (TH&P) are instruments of TH&P's service. Unless otherwise indicated, TH&P shall be deemed the author of drawings, specifications and other documents and will retain all common law, statutory and other reserved rights, in addition to the copyright. Documents prepared by TH&P are for use solely with respect to this project. These documents shall not be used, copied or retained without the specific written consent of TH&P. Any violations of the above rights of TH&P shall be prosecuted to the maximum possible extent within the law.

GAS MAIN RELOCATION PLAN

SR 107 (UNICOI DRIVE), BRIDGE OVER NORTH INDIAN CREEK

Tysinger, Hampton & Partners, Inc.
Civil Engineering · Surveying · Environmental Consulting
3428 BRISTOL HIGHWAY
JOHNSON CITY, TENNESSEE 37601
Phone:(423) 282-2687 · Fax: (423)854-4563
Email: tbp@tysingerengineering.com
WWW.TYSINGERENGINEERING.COM

JOB NO. : 20101000	DRAWING BY: JES,CRR
CADD FILE : 20101000.DWG	CHECKED BY: TOP

8/19/2021 2:18 PM – Jonathon Shipley
P:\Projects\2020\20101000 – UCGUD Gas Main Relocation 107\Drawings\20101000_JUC107-03_UCGUD Relocation Plan.dwg – 2.94Mb
U6-2 Plan

TYPE	YEAR	PROJECT NO.	SHEET NO.
CONST	2022	BR-STP-107(28)	U6-3

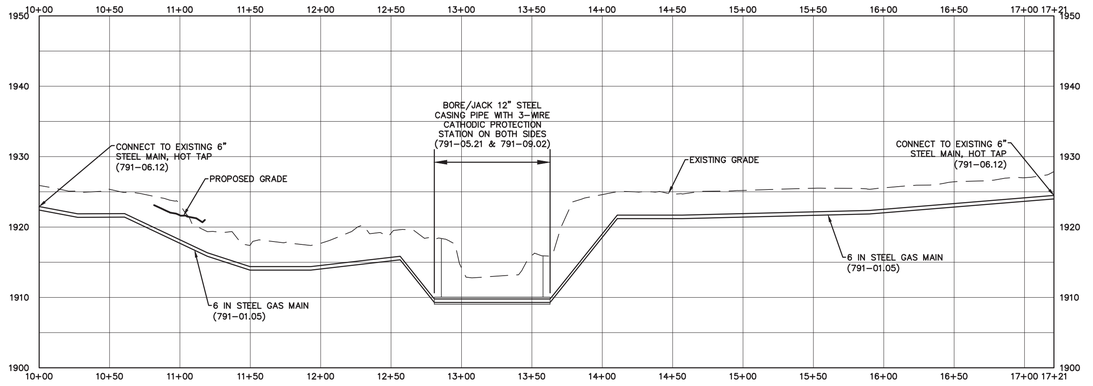

6 INCH STEEL GAS MAIN RELOCATION
HORIZONTAL SCALE 1"=50'
VERTICAL SCALE 1"=10'

EXISTING AND PROPOSED GRADES DEPICTED AS PROVIDED BY TENNESSEE DEPARTMENT OF TRANSPORTATION. THE CONTRACTOR SHALL FIELD VERIFY CONDITIONS PRIOR TO CONSTRUCTION.

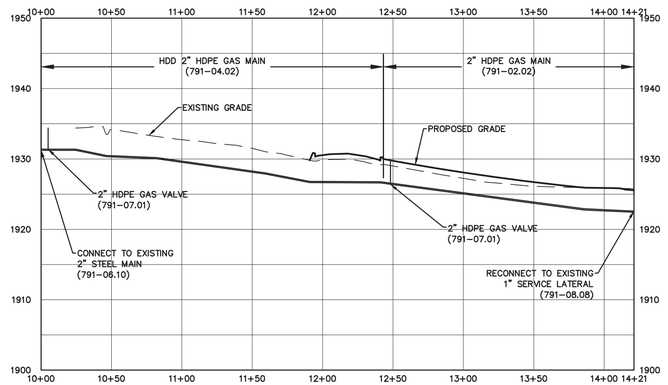

2 INCH HDPE GAS MAIN RELOCATION (TRACT 10 & SOUTH ON SR 107)
HORIZONTAL SCALE 1"=50'
VERTICAL SCALE 1"=10'

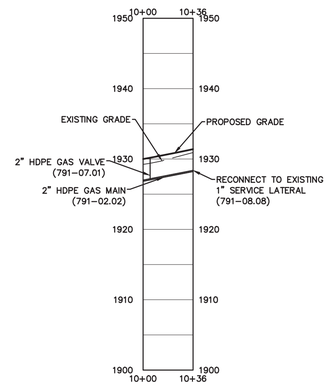

2 INCH HDPE GAS RELOCATION (NORTH ON SR 107)
HORIZONTAL SCALE 1"=50'
VERTICAL SCALE 1"=10'

PROFILE LEGEND

EXISTING GROUND — — — —

FINISHED GROUND ————

These documents prepared by Tysinger, Hampton & Partners, Inc. (TH&P) are instruments of TH&P's service. Unless otherwise indicated, TH&P shall be deemed the author of drawings, specifications and other documents and will retain all common law, statutory and other reserved rights, in addition to the copyright. Documents prepared by TH&P are for use solely with respect to this project. These documents shall not be used, copied or retained without the specific written consent of TH&P. Any violations of the above rights of TH&P shall be prosecuted to the maximum possible extent within the law.

GAS MAIN RELOCATION PROFILES

SR 107 (UNICOI DRIVE), BRIDGE OVER NORTH INDIAN CREEK

NOTICE

LOCATION OF ALL UTILITIES AND UNDERGROUND STRUCTURES SHOWN ARE APPROXIMATE AND THOSE SHOWN ARE NOT NECESSARILY ALL OF THE EXISTING UTILITIES AND STRUCTURES. IT IS THE CONTRACTOR'S RESPONSIBILITY TO DETERMINE THE EXACT LOCATION AND THE EXISTENCE OF ALL UTILITIES AND UNDERGROUND STRUCTURES.

Tysinger, Hampton & Partners, Inc.
Civil Engineering · Surveying · Environmental Consulting
3428 BRISTOL HIGHWAY
JOHNSON CITY, TENNESSEE 37601
Phone:(423) 282-2687 · Fax:(423)854-4563
Email: th@tysinger-engineering.com
WWW.TYSINGERENGINEERING.COM

JOB NO. : 20101000	DRAWING BY: CRR
CADD FILE : 20101000.DWG	CHECKED BY: TOP

8/19/2021 2:18 PM – Jonathan Shipley
F:\Jobs-2020\20101000 – UC&UD Gas Main Relocation 107\Drawings\20101000_UC107-03_UC&UD Relocation Plan.dwg – 2.94Mb
U6-3 Profile